OFFICIAL STATUTES, RULES AND REGULATIONS

ISSF

CamScanner

ALL MEDALS WON WITH
MORINI CM 200 EI

www.morini.ch

MORINI COMPETITION ARM SA

TRADITIONAL
SWISS
PRECISION

CamScanner

OFFICIAL STATUTES, RULES AND REGULATIONS

International Shooting Sport Federation
Internationaler Schiess-Sportverband e.V.
Fédération Internationale de Tir Sportif
Federación Internacional de Tiro Deportivo
ISSF • Widenmayerstr. 16 • GER-80538 München • Germany
Phone: +49-89-5443550 • e-mail: munich@issf-sports.org
Fax: +49-89-54435544 • internet: http://www.issf-sports.org

ISSF

CamScanner

© International Shooting Sport Federation, Munich, Germany.
All rights reserved.
EDITION 2022 (First Print 01/2023)
Effective 1 JANUARY 2022

CamScanner

CONTENTS

Summary of ISSF Fees 5

1. Constitution of the ISSF 7

2. Terms of Reference 29

3. ISSF General Regulations 35

Article 3.12.3.1 Annex “Q”: Special Regulations for the Participation in the Shooting Sport Events of the Olympic Games 50

Article 3.12.3.2 Annex “D”: Athlete Declaration and ISSF ID Number Application Form 51

Article 3.12.3.3 Annex “G”: General Procedures for Organizing Committees 55

Article 3.12.3.4 Annex “W”: Application Procedures for World Championships 56

Article 3.12.3.5 Annex “CE”: Code of Ethics 62

Article 3.12.3.6 Annex “R”: Procedures for Recognition of World Records 70

Article 3.12.3.7 Annex “P”: Rules for Filing and Deciding Protests 71

Article 3.12.3.8 Annex “TA”: Training Academy 72

Article 3.12.3.9 Annex “J”: Guidelines for Judges 73

Article 3.12.3.10 Annex “S”: Guidelines for Shotgun Referees 88

Article 3.12.3.11 Annex “A”: Guidelines for the Public Affairs Activities 99

Article 3.12.3.12 Annex “B”: Guidelines for Media Coverage, Broadcasting and Advertising 101

Article 3.12.3.13 Annex “AC”: Athletes Committee 102

4. ISSF Eligibility, ISSF Commercial Rights and ISSF Sponsorship / Advertising Rules 105

5. ISSF Anti-Doping Regulations 119

6. General Technical Rules for all Shooting Disciplines 173

7. Rifle Rules 339

8. Pistol Rule 365

9. Shotgun Rules 395

10. Running Target Rules 459

11. Target Sprint Rules 483

CamScanner

Separate Documents available at the ISSF Headquarters or for download on the ISSF website:

ISSF Corporate Identity and Design

Guidelines for Organizing ISSF Championships

Guidelines for the Organization of the Media Work

Guidelines for Accreditation, Finals Ranges and Award Ceremonies

Checklists for Technical Delegates

ISSF World Cup Finals: How to qualify for the WCF?

Training Guidelines for ISSF Judges' Courses

Manual for ISSF Classification Officers

Training Manual Rifle for ISSF Range Officials & Judges

Training Manual Pistol for ISSF Range Officials & Judges

Training Manual Shotgun for ISSF Range Officials & Judges

Training Manual Running Target for ISSF Range Officials & Judges

Commands and Announcements for Finals

Rifle Equipment Control Guide

Pistol Equipment Control Guide

Shotgun Equipment Control Guide

Equipment Control Instruments

CamScanner

FEES

Summary of fees for the International Shooting Sport Federation.

Competitions		
Entry Fee (except OG and YOG) (set by General Assembly)	Euro	170.00
Late Entry Fee (between 30 and 3 days before the Official Arrival Day providing that entry can be accepted by the OC) per start Euro 170.00 plus additional 50.00	Euro	220.00
The Organizing Committee must pay a fee to the ISSF for each entry within 30 days	Euro	5.00
Entry fee for each Official in any ISSF Championship (set by General Assembly)	Euro	50.00
Protest fee in competitions	Euro	50.00
Appeal fee in competitions	Euro	100.00
Training fee for shotgun trap / skeet	Euro	8.00
Training fee for shotgun double trap	Euro	10.00
Replacement of “Equipment Control Card”	Euro	10.00
Clothing Re-inspection fee if resubmitted for the second or subsequent test during the same championship (per item / per subsequent inspection	Euro	20.00

ISSF Administration Fees		
Issue of a new Judges licence	Euro	50.00
Renewal of Judges licence	Euro	25.00
Upgrade of Judges licence	Euro	15.00
Issue of new Shotgun Referees licence	Euro	50.00
Renewal of Shotgun Referees licence	Euro	25.00
Issue of a new ISSF Coach licence	Euro	50.00
Renewal of an ISSF Coach licence	Euro	25.00
Issue of a new ISSF Coach Pro licence	Euro	100.00
Renewal of an ISSF Coach Pro licence	Euro	50.00
Issue for Athletes ID Numbers	Euro	50.00
Issue of Athletes ID Numbers Express application (issue within two weeks prior to the first participationin an ISSF Championship)	Euro	100.00
Participation Fee in ISSF Electronic Scoring Target Course (includes issue of Licence after Examination is passed)	Euro	70.00
Membership fee per federation (set by General Assembly)	Swiss Francs	1.500.00

CamScanner

ISSF Training Academy		
Training Academy participation fee for courses	Euro	1.250.00

All competition fees may be paid to the Organizing Committee in Euro or US Dollars by using the daily exchange rate. The Organizing Committee may ask for a preferenced currency for the payments.

All fees to be paid to ISSF may be paid in Euro, US Dollars or Swiss Francs by using the daily exchange rates.

The fees for items in the ISSF Shop are separate and available online.

CamScanner

1
ISSF CONSTITUTION

The International Shooting Sport Federation was founded in 1907 as the “Union Internationale des Federations et Associations Nationales de Tir”, was dissolved in 1915 and reorganized in 1921 under the name of “Union Internationale de Tir”. In 1939, activities were again suspended and the Union was reorganized in 1947 under the name: “International Shooting Union – UIT”. On 15th July 1998 the Union changed its name to the present name “International Shooting Sport Federation”. The Federation title in short form is “ISSF”.

The ISSF is formally recognized by the International Olympic Committee (IOC) as the sole controlling body in the Olympic Movement administering the shooting sport at world level and encompassing its member organizations, who administer the shooting sport at national level. The ISSF intends to develop, promote and protect the Olympic Movement, to observe the provisions of the Olympic Charter of the IOC and to recognize the decisions of the IOC. The ISSF specifically supports a human, manipulation - and doping-free sport and recognizes international and national anti-doping rules, in particular the World Anti-Doping Code.

The ISSF is committed to its responsibility for up-to-date environmental and nature conservation. In recognition of the sustainability mission statement and the declaration of the IOC of Paris in 1994, it is committed to an environmentally friendly and sustainable development of its sport in general and their whole organisation.

CamScanner

1.1 PURPOSE 9
1.2 ISSF HEADQUARTERS 9
1.3 MEMBERSHIP 10
1.4 ISSF BODIES 12
1.5 DECISION MAKING 13
1.6 GENERAL ASSEMBLY 14
1.7 COUNCIL 15
1.8 EXECUTIVE COMMITTEE 17
1.9 PRESIDENT 18
1.10 VICE- PRESIDENTS 19
1.11 SECRETARY GENERAL 19
1.12 ISSF COMMITTEES 19
1.13 TECHNICAL COMMITTEE 21
1.14 ATHLETES COMMITTEE 21
1.15 RIFLE, PISTOL, SHOTGUN, RUNNING TARGET, TARGET SPRINT COMMITTEES 22
1.16 JUDGES COMMITTEE 22
1.17 COACHES COMMITTEE 22
1.18 STATUTES AND ELIGIBILITY COMMITTEE 23
1.19 MEDICAL COMMITTEE 23
1.20 PRESIDENT OF HONOUR AND HONORARY MEMBER 23
1.21 CONTINENTAL CONFEDERATIONS 23
1.22 AUDITORS 25
1.23 FINANCIAL POLICY 25
1.24 LANGUAGES 25
1.25 RESOLUTION OF DISPUTES 26
1.26 ALTERATION OF THE CONSTITUTION 26
1.27 DISSOLUTION OF THE FEDERATION 26
1.28 REGISTRATION OF THE FEDERATION ACCORDING TO ARTICLES 2.2 26
1.29 FINAL PROVISION 27
1.30 APPROVAL 27
1.31 TRANSITORY 27

CamScanner

1.1 PURPOSE

1.1.1 **THE ISSF**

1.1.2 Promotes and guides the development of the shooting sport, without discrimination of any kind, such as race, colour, sex, sexual orientation, language, religion, political or other opinion, national or social origin, property, birth or other status.

1.1.3 Strengthens bonds of friendship and collaboration between shooting associations of all nations, Continental Confederations, other sport organizations and bodies according to the Fundamental Principles of Olympianism as defined in the Olympic Charter.

1.1.4 For achievement of its purposes the ISSF in particular

1.1.4.1 Co-operates with the IOC and the Organizing Committees of the Olympic Games in carrying out the organization of the shooting sport events and, as delegated by the IOC, supervises and controls all technical arrangements;

1.1.4.2 Organizes World Championships, World Cups and other international competitions for ISSF recognized events for juniors and seniors;

1.1.4.3 Encourages and supervises other international championships and competitions that include ISSF recognized events, upon request of the Organizers;

1.1.4.4 Recognizes shooting sport disciplines and events;

1.1.4.5 Supports the efforts of Member Federations to further develop the shooting sport in their respective country/ies;

1.1.4.6 Grants support to Member Federations and individual athletes whose performances in international shooting competitions particularly contributed to the achievement of the Federation's purposes;

1.1.4.7 Establishes official Rankings;

1.1.4.8 Issues Regulations and Rules;

1.1.4.9 Licences Judges and Coaches;

1.1.4.10 Develops and promotes methods and programmes of education;

1.1.4.11 Researches scientific and medical principles;

1.1.4.12 Publishes official communications;

1.1.4.13 Awards distinctions to those who have contributed to the achievement of the Federation's purposes.

1.2 ISSF HEADQUARTERS

1.2.1 The ISSF Headquarters is located in Munich, Federal Republic of Germany.

1.2.2 The ISSF must be registered under the laws of the country in which the Headquarters is located.

1.2.3 Any change of the location of the Headquarters must be approved by the General Assembly.

CamScanner

1.3 MEMBERSHIP

1.3.1 The ISSF must be composed of those National Shooting Organizations that are members of their National Olympic Committees and recognized by the respective National Olympic Committee as the sole governing body of the shooting sport related to ISSF recognized events in the country.

1.3.2 The National Olympic Committee of the country must be recognized by the International Olympic Committee.

1.3.3 Membership is open to one Member Federation from each country or territory which is governed by a NOC recognized by the IOC.

1.3.4 Countries with two Member Federations recognized prior to 1989 may retain dual membership if both of the Member Federations are members of their National Olympic Committee according to Article 3.1.

1.3.5 Member Federations must not belong to other International Shooting Associations which include events defined in the ISSF Regulations and must not participate in the championships of such International Shooting Associations, except when authorized by the ISSF.

1.3.6 Membership fees are due on January 1st of each year and must be paid within ninety (90) days.

1.3.7 Membership may be full or associated. Unless the Constitution indicates otherwise, the term Member(s) comprises both Full Members and Associate Members.

1.3.8 **RIGHTS OF THE MEMBERS**

1.3.8.1 To submit proposals for consideration by ISSF Bodies including the General Assembly;

1.3.8.2 To take part in the ISSF competitions with their athletes in accordance with the ISSF Regulations;

1.3.8.3 To submit applications for the organization of the World Championships and other ISSF recognized competitions;

1.3.8.4 To exercise all other rights granted to them by this Constitution and regulations and decisions made by the respective ISSF body.

1.3.9 **ADDITIONAL RIGHTS OF FULL MEMBERS**

1.3.9.1 To vote on any items in the General Assembly;

1.3.9.2 To propose candidates for the election of any function within the ISSF bodies and committees.

1.3.10 **OBLIGATIONS OF THE MEMBERS**

1.3.10.1 To comply with this Constitution and Regulations as well as decisions made by the respective ISSF;

1.3.10.2 To take part in the ISSF competitions with their athletes in accordance with the ISSF Rules and Regulations;

1.3.10.3 To meet the responsibility as Host Federation entrusted with the organization of the World Championships and other ISSF competitions;

1.3.10.4 To encourage shooting practice and participation in competitions in disciplines and events recognized by the ISSF;

CamScanner

1.3.10.5 To regularly organize national shooting sport competitions in ISSF recognized events in Senior and Junior categories and provide the ISSF with the results upon request.

1.3.11 **ADDITIONAL OBLIGATIONS OF FULL MEMBERS**

1.3.11.1 To pay the annual membership fee and any other financial obligations established by ISSF Rules and Regulations in due time;

1.3.11.2 To take part with its athletes in at least two ISSF competitions per year, which includes Continental Championships, Continental Games and other international competitions organized by the Continental Confederations.

1.3.12 **REQUIREMENTS FOR MEMBERSHIP**

1.3.12.1 Applicants for membership must submit all documents in the official working language English to the ISSF Headquarters:

1.3.12.2 Details of their foundation and organization including a list of members of the statutory bodies of the applicant;

1.3.12.3 A copy of their Constitution/Statutes and of the minutes of the last General Assembly;

1.3.12.4 Certification of recognition and affiliation as required in 1.3.1.and 1.3.2;

1.3.12.5 A copy of their Anti-Doping Regulations which must be in conformity with the ISSF Anti-Doping Regulations and the World Anti-Doping Code;

1.3.12.6 Copies of Result books of the national shooting sport competitions for Seniors and Juniors in the last two years;

1.3.12.7 A written declaration whereby the applicant undertakes to observe the ISSF Constitution and all regulations (including Code of Ethics) as well as to recognize decisions taken by the competent ISSF bodies. After affiliation to ISSF the Member Federation has the obligation to integrate the content of this declaration into a provision of the Member Federations' Constitution/ Statutes. The Council may therefore set an appropriate deadline for a Member Federation.

1.3.12.8 Associated Membership may be granted to a National Shooting Organization in case it is needed for this National Shooting Organization to be recognized by the respective NOC according to article 1.3.1 and 1.3.2 of this Constitution, or when it would allow the National Shooting Organization, that has applied for the ISSF Membership with all necessary documents, to participate in competitions and events supervised by the ISSF before a Full Membership is decided.

1.3.12.9 In case an application for membership is denied by the Council, the decision may be appealed to the General Assembly.

1.3.13 **MEMBERSHIP STATUS**

1.3.13.1 Every two years (starting from 1st January 2022) or upon request the Executive Committee may review the fulfilment of the Membership requirements and obligations by the Member Federations with respect to their current Membership status and propose the Council to decide whether any Member Federation should be transferred to another Membership status.

1.3.13.2 The Member under review will be invited to present its position to the Executive Committee and the Council.

CamScanner

1.3.14 **SUSPENSION**

1.3.14.1 A Member Federation may be temporarily suspended if, in the opinion of the Executive Committee, this Member Federation has committed a breach of this Constitution.

1.3.14.2 A suspended Member Federation may not exercise its membership rights. The ISSF Executive Committee may allow athletes of a suspended Member to participate in ISSF Competitions under the ISSF Flag.

1.3.14.3 Any suspension must be submitted to the Council within two months for consideration as to whether or not the Member Federation should be excluded, or the suspension lifted or continued.

1.3.14.4 The Member concerned will be invited to present its position to the Executive Committee and/or the Council.

1.3.15 **EXCLUSION**

1.3.15.1 A Member Federation may be excluded by the Council if it seriously breaches this Constitution.

1.3.15.2 The Member concerned will be invited to present its position to the Council.

1.3.15.3 A Member Federation may be excluded by the Council, if it loses its status as the sole governing body of the shooting sport related to ISSF recognized events in the country.

1.3.15.4 The exclusion must be supported by at least two-thirds of the valid votes cast.

1.3.16 **WITHDRAWAL OF MEMBERSHIP**

1.3.16.1 Membership with ISSF may be withdrawn in writing to the Secretary General which must arrive at least by 31st October in order to be valid for the next year.

1.3.16.2 The Secretary General informs the Executive Committee who confirms the withdrawal in writing as well as the date of validity.

1.4 ISSF BODIES

1.4.1 The ISSF conducts its work through the following bodies and individual positions:

1.4.1.1 General Assembly;

1.4.1.2 Council;

1.4.1.3 Executive Committee;

1.4.1.4 President;

1.4.1.5 Vice-Presidents;

1.4.1.6 Secretary General;

1.4.1.7 Ethics Committee;

1.4.1.8 Athletes Committee;

1.4.1.9 Other Committees;

1.4.2 While individual members of ISSF Bodies may bring knowledge, skill and expertise from the Member Federation from which they are drawn, they must perform their duties as a member of an ISSF Body in an impartial and independent manner, serving only in the interests of the ISSF.

CamScanner

1.4.3 All members of the ISSF Bodies must promote the interests of the ISSF and support the decisions taken by its bodies.

1.4.4 A person can only be elected or appointed to one position. Ex-officio positions remain unaffected.

1.4.5 All persons elected to any ISSF Body serve on an honorary basis and without salary but can be reimbursed for expenses. The Secretary General shall receive an appropriate salary for operating the ISSF headquarters as CEO.

1.4.6 **The following election procedures apply to elections of members of ISSF Bodies except the Athletes Committee:**

1.4.6.1 A candidate for election to any position in an ISSF Body must have the support of his/her Member Federation. The nomination must be submitted to the Secretary General in writing at least ninety (90) days prior to the meeting in which the election takes place.

1.4.6.2 All members of the Council, the Executive Committee, the ISSF President, Vice-Presidents as well as Committee Chairmen are elected four-year terms of office. Such mandate starts after the election during the General Assembly and ends before the new elections in the next General Assembly in the fourth year of the mandate.

1.4.6.3 All ISSF Body members may only serve twelve (12) consecutive years in the same elective position.

1.4.6.4 The age limit for nomination of any candidate is seventy-five (75) years as of the date of the election.

1.4.7 A member of any ISSF Body shall not take part in the deliberation of any matter or point of issue involving the Member Federation which has nominated him/her as candidate and/or to which he/she is affiliated, or in any case in which a conflict of interest exists.

1.5 DECISION MAKING

1.5.1 Unless otherwise prescribed in this Constitution, a valid decision is taken within any of the aforementioned ISSF Bodies, if the request is supported by a simple majority of the valid votes cast. Abstentions shall not be counted. In the event of a tie, the chairman of the ISSF Body in question shall have the casting vote.

1.5.2 Such decisions are taken by open vote unless a request for secret ballot is supported by at least one-third (1/3) of the members present within the corresponding ISSF Body.

1.5.3 Any decision shall come into force with immediate effect, except if the corresponding ISSF Body decides otherwise.

1.5.4 Elections must be executed by secret ballot. In case the number of candidates is equal to the number of vacancies, the competent elective body of ISSF may decide to proceed otherwise and hold elections by open vote or by acclamation.

1.5.5 In respect of elections to any of the aforementioned ISSF bodies, the candidate(s) shall be elected in the first ballot, if supported by the simple majority of the valid votes cast (i.e. more than half of the valid votes cast) in the order of received votes. If not enough candidates receive the simple majority, there shall be a second ballot executed. In the second ballot candidates shall be elected by relative majority. In the event of a relevant tie in one ballot, those

CamScanner

candidates in question go for a further ballot in which the candidate with the simple majority of the valid votes cast is elected. If the tie is repeated, the chairman responsible for the election in question shall determine the elected candidate by the drawing of lots.

1.5.6 Only ballots that contain votes for as many candidates or fewer as there are vacancies are valid. Ballots with incorrect names indicated, discriminating words or unclear declarations are considered as invalid.

1.5.7 The General Assembly may agree by simple majority of the valid votes cast to take decisions by electronic voting.

1.6 GENERAL ASSEMBLY

1.6.1 The General Assembly is the supreme authority of the ISSF. It is either the ordinary General Assembly to be held every two years or an extraordinary General Assembly upon decision of the Council or a written request of at least one-third (1/3) of the Member Federations having voting rights.

1.6.2 The General Assembly consists of:

1.6.2.1 A maximum of two (2) delegates per Member Federation. If two Member Federations represent one country, only one (1) delegate per Member Federation is admissible; and

1.6.2.2 Members of the Council and Executive Committee, as well as the Secretary General have consultative powers only (no voting right), unless they officially represent a Member Federation at a General Assembly.

1.6.3 Only the President, the Vice-President, the Secretary General, the Executive Director or Executive Committee/Board members can represent their Member Federation at the General Assembly. Participation forms for delegates must reach the Secretary General at least seven (7) working days prior to the opening of the General Assembly. All delegates representing the Member Federations must provide documented proof of their appointment as a delegate of that Member Federation.

1.6.4 Each Member Federation that represents one country has two (2) votes. Member Federations that represent one (1) country together with a second Member Federation, have one (1) vote each. Representation of members by proxy is not allowed. The ISSF shall cover the expenses for one delegate per Member Federation to attend the General Assembly.

1.6.5 The ordinary or extraordinary General Assembly is chaired by the President.

1.6.6 After the official opening of the ordinary or extraordinary General Assembly, the Secretary General must conduct the roll call of voting powers, establish the voting list and announce the total number of eligible votes to the General Assembly.

1.6.7 The General Assembly has the powers assigned to it by the Constitution, in particular to:

1.6.7.1 Elect Scrutinizers for General Assembly votes and elections;

1.6.7.2 Approve the agenda;

1.6.7.3 Appoint the minutes committee on proposal of the Executive Committee;

1.6.7.4 Approve reports;

1.6.7.5 Receive and approve the Auditors' report;

CamScanner

1.6.7.6 Approve the final balances and the financial report;

1.6.7.7 Discharge the Executive Committee and Secretary General;

1.6.7.8 Handle requests of Member Federations;

1.6.7.9 Adopt and modify the Constitution;

1.6.7.10 Elect ISSF's President, the Vice- Presidents, five (5) members of the Executive Committee, and the Chairmen of the Committees with the exception of the Chairman of the Athletes Committee;

1.6.7.11 Grant the title of "Honorary Member" and " President of Honour" on proposal by the Executive Committee;

1.6.7.12 Approve the membership fee; and

1.6.7.13 Declare the dissolution of the ISSF

1.6.8 The ordinary General Assembly meets once every two (2) years in a place chosen by the Executive Committee.

1.6.9 The agenda is prepared by the Secretary General and approved by the Executive Committee. Member Federations may forward their own proposals for the agenda to the Secretary General in writing in English and with a short explanation as well as any supporting documents no later than ninety (90) days prior to the opening of the General Assembly.

1.6.10 The date, time and place for the General Assembly is determined by the Executive Committee and notice must be given to the Member Federations at least one-hundred and twenty (120) days in advance. The final agenda with the supporting documents must be sent to the Member Federations and the Council at least sixty (60) days prior to the date of the General Assembly.

1.6.11 Decisions by the ordinary or extraordinary General Assembly are restricted to items on the final agenda. Items, excluding amendments to this Constitution, may be added to the agenda by the Council upon approval by a two-third (2/3) majority vote in the General Assembly. However, during the meeting no new item may be added on to the agenda, except when unanimously agreed.

1.6.12 An extraordinary General Assembly shall be held within six (6) months of receipt of a valid written request by the Secretary General. The Executive Committee shall decide the date, time and place of the extraordinary General Assembly.

1.6.13 To take valid decisions, the ordinary or extraordinary General Assembly must have at least a quorum of presence of one-third of its Member Federations with the right to vote.

1.6.14 The minutes of the General Assembly shall be sent to the Member Federations promptly after approval by the Council in its first meeting following the General Assembly excluding the Council meeting dedicated to the elections of the Committee members on the next day after the General Assembly.

1.7 COUNCIL

1.7.1 The Council may hold ordinary or extraordinary meetings.

1.7.2 The Council consists of the following members, representing both genders (minimum 4 per gender):

1.7.2.1 The Executive Committee members;

CamScanner

1.7.2.2 The Chairmen of the following Committees (2): Statutes and Eligibility, Medical;

1.7.2.3 Representatives of the Continental Confederation according to Article 1.21.7.

1.7.3 The Council has the powers assigned to it under this Constitution and other Regulations and Rules, in particular the following:

1.7.3.1 To establish or amend Regulations and Rules upon recommendation by the Executive Committee or any other Committee to the extent such competence has not been assigned to the General Assembly or the Executive Committee according to this Constitution. This includes in particular the competence to amend, create and approve:

a) General Regulations,

b) Anti-Doping Rules,

c) Code of Ethics,

d) Eligibility Rules;

e) Disciplinary Regulations.

1.7.3.2 To appoint replacements in case a vacancy in any of the ISSF bodies occurs; any replacement shall serve for the remaining term of office;

1.7.3.3 To elect members of the Committees for a two-(2)-year term with the exception of the members of the Athletes Committee;

1.7.3.4 To approve minutes of the General Assembly;

1.7.3.5 On proposal from an Ad-Hoc Awards Committee, to approve award distinctions for outstanding service;

1.7.3.6 To acknowledge Committee reports.

1.7.3.7 To decide on Membership matters;

1.7.4 The ordinary Council meeting is held once a year upon proposal of the President. Members must be informed at least sixty (60) days prior to the meeting about the date, time and place of the meeting as well as of the draft agenda prepared by the Secretary General. Any Council member may forward their own proposals for the agenda in writing in English and with a short explanation as well as any supporting documents no later than forty (40) days prior to the Council meeting to the Secretary General. The final agenda (including all supporting documents) must be submitted to the Council members no later than thirty (30) days prior to the meeting by the Secretary General.

1.7.5 At any meeting, the Council may take decisions when more than half (1/2) of its members are present. Proxy voting is not allowed.

1.7.6 For urgent matters, as decided by the President and/or Secretary General, the decisions may be taken by postal or electronic vote with a two-third (2/3) majority of the members who take part in the voting by casting their votes. The quorum of such vote must be 1/2 of the members. Such decisions are put into the minutes of the next Council meeting.

1.7.7 Upon proposal of the Executive Committee, the Council may suspend or expel a member of the Executive Committee, the Council or a Committee as well as any official or athlete, if such a member, official or athlete seriously violates this Constitution, Regulations, the ISSF Code of Ethics or decisions of the ISSF. A majority of three-fourths (3/4) of the members who cast votes is required to

CamScanner

suspend or expel such a member. The quorum of such vote must be 1/2 of the members.

1.8 EXECUTIVE COMMITTEE

1.8.1 The Executive Committee consists of the following members:

1.8.1.1 The ISSF President (1);

1.8.1.2 Four Vice- Presidents (4); elected by the General Assembly represented by both genders:

1.8.1.3 The Chairman of the Technical Committee and the Chairman of the Athletes Committees (2);

1.8.1.4 Five (5) representatives of the Continental Confederations (one from each Continent) according to Article 1.21.7;

1.8.1.5 Five (5) ordinary members elected by the General Assembly representing both genders.

1.8.2 The Executive Committee has the powers assigned to it under this Constitution and other Regulations and decisions by the General Assembly or Council, in particular the following:

1.8.2.1 To ensure that decisions of the General Assembly and the Council are put into effect;

1.8.2.2 To appoint the Secretary General on proposal of the President;

1.8.2.3 To appoint the ISSF Treasurer from the members of the Executive Committee with the responsibility to manage the financial assets of the ISSF;

1.8.2.4 To appoint an additional member to the Executive Committee representing the Member Federation of the host of the next Olympic Games for the same term of office as well as to dismiss the member;

1.8.2.5 To amend, create and approve:

a) Technical Rules for shooting events,

b) Events that are recognized by the ISSF,

c) Commercial Rights and Sponsorship Rules;

d) To adopt guidelines and procedures for ISSF bodies in line with this Constitution and the ISSF Regulations;

1.8.2.6 To designate a review committee to examine proposals to the General Assembly;

1.8.2.7 To decide the hosts of the ISSF supervised competitions, including the ISSF World Championships and to decide on the substitution of a Member Federation as the host of an ISSF Championship in the case that the selected host is unable to fulfil its duties;

1.8.2.8 To designate delegates, representatives and juries for ISSF competitions and the Olympic Games;

1.8.2.9 To decide on the dates, time and place of the ISSF General Assemblies;

1.8.2.10 To decide about the design and use of the ISSF logos and emblems;

1.8.2.11 To approve yearly preliminary budgets and balances;

CamScanner

1.8.2.12 To establish, the “Regulations for the Participation in the Shooting Events of the Olympic Games” to be submitted to the IOC for approval;

1.8.2.13 To provisionally accept applicants for associated membership;

1.8.2.14 To temporarily suspend a Member Federation, if such Member Federation does not meet the requirements for ISSF membership anymore, or in case such Member Federation has violated this Constitution or any other ISSF Rules or Regulations;

1.8.2.15 To set up ad-hoc Committees and Commissions for a limited period of time and/or for specific tasks and to determine the number of its members;

1.8.2.16 To act on matters not assigned either to the General Assembly or the Council;

1.8.2.17 To have the power to decide on all matters not covered in this Constitution. Such decisions are to be made in accordance with the relevant IOC Regulations. If no such regulations exist, the Executive Committee shall decide according to their duty to act fairly.

1.8.3 The Executive Committee will hold meetings at least twice a year. Executive Committee Members must be informed at least sixty (60) days prior to the meetings about date, time and place of the meeting as well as the draft agenda as approved by the President and elaborated by the Secretary General. Any Executive Committee member may forward their own proposals for the agenda in writing in English and with a short explanation as well as any supporting documents no later than forty (40) days prior to the meeting to the Secretary General. The final agenda (including all supporting documents) must be submitted to the Executive Committee members no later than thirty (30) days prior to the meeting by the Secretary General.

1.8.4 At any meeting, the Executive Committee may take decisions when more than half (1/2) of its members are present. Proxy voting is not allowed.

1.8.5 For urgent matters, decisions may be taken by postal or electronic vote with a two-thirds (2/3) majority of the valid votes cast. The quorum of such vote must be 1/2 of the members. Such decisions are put into the minutes of the next Executive Committee meeting.

1.9 PRESIDENT

1.9.1 The President of the ISSF:

1.9.1.1 Provides leadership and direction to the ISSF;

1.9.1.2 Represents the ISSF and presides over all its activities;

1.9.1.3 Represents the ISSF in international sports organizations and in all legal matters with the right for single representation of the ISSF;

1.9.1.4 Acts on behalf of the ISSF as circumstances require;

1.9.1.5. Chairs the meetings of the General Assembly, of the Council as well as of the Executive Committee;

1.9.1.6 Ensures the proper observance of the Constitution and ISSF Regulations, Rules as well as the decisions taken under them;

1.9.1.7 Supervises the execution of decisions and activities of ISSF Bodies;

1.9.1.8 Ensures that the decisions taken by the Executive Committee are put into effect;

CamScanner

1.9.1.9 Ensures that ISSF's obligations towards its Member Federations are fulfilled;

1.9.1.10 Performs special assignments on request of the Executive Committee or Council.

1.10 VICE- PRESIDENTS

1.10.1 The ISSF has four (4) Vice- Presidents elected by the General Assembly represented by both genders.

1.10.2 The Vice- Presidents:

1.10.2.1 Support and assist the President and carry out duties assigned by the Council, the Executive Committee, the President;

1.10.2.2 A Vice-President, appointed by the President, convenes and chairs the General Assembly, the Council or the Executive Committee meetings;

1.10.2.3 In case no such appointment has been made, the Vice-President appointed by the Executive Committee replaces the President when he cannot anymore execute his duties due to an accident, illness, etc.; and

1.10.2.4 When present at any ISSF Championship or activity, a Vice-President is the highest ISSF representative and authority after the President.

1.11 SECRETARY GENERAL

1.11.1 The Secretary General is the head of administration of the ISSF, supervises all tasks performed at the ISSF Headquarters.

1.11.2 The Secretary General has the powers assigned to him by this Constitution, other Regulations and in particular the following:

1.11.2.1 Represents the ISSF in all legal matters with a single representation of the ISSF;

1.11.2.2 Supervises and coordinates administrative services and activities;

1.11.2.3 Ensures the implementation, documentation and archiving of all decisions taken by the General Assembly, the Council and the Executive Committee as well as the Committees;

1.11.2.4 Reports on the activities of ISSF Headquarters at each meeting of the General Assembly, the Council and of the Executive Committee;

1.11.2.5 Appoints and dismisses the staff working in the ISSF Headquarters;

1.11.2.6 Attends meetings of the General Assembly, the Council, the Executive Committee as well as the Committees with voice but without vote;

1.11.2.7 Fulfils ISSF administrative responsibilities that include conducting ISSF correspondence, preparing circular letters and reports and mailing summons to meetings;

1.11.2.8 Performs special assignments on request of the Council, of the Executive Committee, or of the President.

1.12 ISSF COMMITTEES

1.12.1 The ISSF has the following Committees with its number of members in addition to the Chairman:

CamScanner

1.12.1.1 The Technical Committee (12 members),

1.12.1.2 The Athletes Committee (9 members),

1.12.1.3 The Rifle Committee (7 members),

1.12.1.4 The Pistol Committee (7 members),

1.12.1.5 The Shotgun Committee (7 members),

1.12.1.6 The Running Target Committee (7 members),

1.12.1.7 The Target Sprint Committee (5 members),

1.12.1.8 The Judges Committee (7 members),

1.12.1.9 The Coaches Committee (7 members),

1.12.1.10 The Statutes and Eligibility Committee (7 members),

1.12.1.11 The Medical Committee (at least 7 members), and

1.12.1.12 The Sustainability Committee (7 members)

1.12.2 Both genders must be represented in all Committees by at least two members.

1.12.3 Members of the Committees may act as judges for ISSF Championships Juries, if the Executive Committee assigns them to do so and if they hold the appropriate licence.

1.12.4 The Committees act as advisory bodies within the ISSF. They shall assist, support and advise ISSF Bodies with respect to all matters assigned to them according to the provisions below. The ISSF Bodies shall obtain recommendations from the Committee competent to the relevant matter.

1.12.5 The Executive Committee approves the Terms of References for each Committee. In such provisions, they may also define the decision-making power of such a Committee in writing and without affecting the powers of the General Assembly, the Council as well as the Executive Committee.

1.12.5.1 Membership in the Committees is personal and representation by proxy is not permitted. While Committee members bring knowledge, skill, and expertise from the National Federations from which they are drawn, they must act in an impartial and independent manner, serving only in the interests of ISSF.

1.12.5.2 The Chairmen and the Members of the Rifle, Pistol, Shotgun, Running Target, Target Sprint and Judges Committee must be holders of a current Judges' Licence in their respective discipline to be eligible for election.

1.12.5.3 The Chairmen of the Judges, Rifle, Pistol, Shotgun, Running Target and Target Sprint Committees are ex officio members of the Technical Committee.

1.12.6 The Chairmen of the Committees:

1.12.6.1 Shall report concerning Committee meetings and activities in the next meeting of the Council;

1.12.6.2 May advise ISSF bodies in urgent matters without a meeting of the members of the respective Committee. In such cases, the Chairmen shall inform their Committee members about the advice given; and

1.12.6.3 Shall designate a recording secretary for each meeting.

1.12.7 The Committees meet, when necessary, at the invitation of the President and Secretary General, who shall approve the meeting in consultation with the respective Chairman. In general, meetings shall be held once a year. Notices

CamScanner

for such meetings will be sent to the Committee members sixty (60) days in advance of the date of the meeting. The agenda as well as all supporting documents should be sent to the participants at least thirty (30) days prior to the meeting.

1.12.8 At any meeting, a Committee may take decisions when more than half (1/2) of its members are present. Proxy voting is not allowed. The Chairman will cast the deciding vote in case of a tied vote.

1.12.9 Minutes of Committee meetings are for internal ISSF use only and may not be published or distributed without the approval of the Secretary General.

1.12.10 Minutes of Committee meetings must be sent to the Secretary General who forwards them to the Council.

1.13 TECHNICAL COMMITTEE

1.13.1 The Technical Committee shall:

1.13.1.1 Assist different disciplines (Rifle, Pistol, Shotgun, Running Target, Target Sprint) in the development of shooting rules and the sport of shooting;

1.13.1.2 Coordinate and review general and rules proposals for different shooting events and submit them for discussion and approval to the Council.

1.13.1.3 Coordinate and review proposals from the Rifle, Pistol, Shotgun, Running Target and Target Sprint Committees;

1.13.1.4 Evaluate and assist in the development of range designs, range equipment and operational procedures for all ISSF Championships; and

1.13.1.5 Approve technical equipment as required.

1.14 ATHLETES COMMITTEE

1.14.1 The Athletes Committee consists of 10 (ten) members comprising the Chairman and nine (9) members of which three (3) are from shotgun, three (3) from rifle and three (3) from pistol. Six (6) members are elected by the athletes (two (2) of each discipline). Three (3) members are appointed by the Executive Committee (one (1) of each discipline) considering the representation of the Continental Confederations pursuant to Article 1.14.3 and the number of votes received by the athletes. The Chairman shall be elected by and from among the nine (9) members of the Athletes Committee. After the election of the Chairman the athlete with the highest number of votes corresponding to the Chairman's discipline shall be adapted as tenth (10th) member of the Athletes Committee. Further details on the electoral rules shall be set out in the procedural regulations concerning the Athletes Committee.

1.14.2 The Athletes Committee must have at least four members of each gender.

1.14.3 The Athletes Committee shall consist of at least one athlete from Member Federations of every Continental Confederation.

1.14.4 The Athletes Committee's duties include:

1.14.4.1 Gathering information and opinions from athletes on their needs and problems with regard to the Olympic Games and major ISSF Competitions;

1.14.4.2 Consulting with athletes in the evaluation of the rules and regulations of the shooting sports and subsequently provide feedback to the ISSF;

CamScanner

1.14.4.3 Establishing contacts and coordinating activities with the Athlete Committees of the IOC, NOCs, Continental and National Federations;

1.14.4.4 Participating in working groups, to ensure the best possible conditions for the training, accommodation and living conditions for the athletes as well as for the conduct of the ISSF competitions;

1.14.4.5 Engaging actively with initiatives and projects that protect and support clean athletes on and off the field of play;

1.14.4.6 Establishing a direct link between athletes within the ISSF;

1.14.4.7 Reporting through its Chairman to the Executive Committee and Council concerning its meetings and activities.

1.14.5 The Council will establish further election and other procedural regulations for the Athletes Committee.

1.14.6 A representative member of the Athletes Committee may attend meetings of other ISSF Committees with voice but without vote.

1.14.7 The provisions established for the Committees also apply to the Athletes Committee

1.15 RIFLE, PISTOL, SHOTGUN, RUNNING TARGET, TARGET SPRINT COMMITTEES

1.15.1 Committees are established for each discipline of the ISSF recognized shooting sport.

1.15.2 They recommend changes to the respective shooting rules to the Technical Committee and Council, and must consider all technical questions relating to the organization of competitions, competition procedures and arms and equipment in their respective disciplines, including the preparation of rule interpretations.

1.15.3 Each Committee shall submit the minutes of each meeting to the Technical Committee.

1.16 JUDGES COMMITTEE

1.16.1 The Judges Committee shall:

1.16.1.1 Provide guidelines for international judges;

1.16.1.2 Create educational programmes for judges and referees;

1.16.1.3 Prepare, conduct and approve courses for judges and jury members;

1.16.1.4 Approve applications for judges' licences;

1.16.1.5 Approve applications for shotgun referee licences; and

1.16.1.6 Propose jury members for ISSF Championships to the Executive Committee.

1.17 COACHES COMMITTEE

1.17.1 The Coaches Committee shall:

1.17.1.1 Gather information and opinions on coaches needs and problems during training and ISSF Championships;

1.17.1.2 Voice recommendations on these issues to the relevant ISSF Bodies;

CamScanner

1.17.1.3 Create educational programmes for coaches;

1.17.1.4 Promote coaching within the sport;

1.17.1.5 Establish links between coaches within the ISSF; and

1.17.1.6 Report through its Chairman to the Executive Committee and Council concerning its meetings and activities.

1.17.2 The provisions established for the Committees also apply to the Coaches Committee.

1.18 STATUTES AND ELIGIBILITY COMMITTEE

1.18.1 The Statutes and Eligibility Committee shall:

1.18.1.1 Study the legal implications of proposed amendments to the ISSF Constitution and other ISSF Rules and Regulations;

1.18.1.2 Study and prepare rule changes regarding athlete eligibility, marketing and sponsorship and regulations for individual participation in ISSF Championships; and

1.18.1.3 Coordinate and review the drafting of amendments to the Constitution.

1.19 MEDICAL COMMITTEE

1.19.1 The Medical Committee shall:

1.19.1.1 Advise relevant ISSF Bodies regarding sports medicine and medical matters as well as matters relating to the IOC Medical Code and/or the WADA Code;

1.19.1.2 Support the organization and execution of anti-doping controls in ISSF Championships; and

1.19.1.3 Promote the exchange of knowledge, experience and research in sport medicine matters through events and publications.

1.20 PRESIDENT OF HONOUR AND HONORARY MEMBER

1.20.1 The General Assembly may grant the title of “President of Honour” or “Honorary Member” for meritorious service to shooting sport.

1.20.2 The Executive Committee shall make these proposals.

1.20.3 The President of Honour is invited to attend the Olympic Games, the World Championships, and the General Assemblies.

1.20.4 The Honorary Member is invited to attend the General Assemblies.

1.20.5 The President of Honour and Honorary Members have the right to offer advice, but they have no voting right.

1.20.6 The status of a President of Honour or an Honorary Member may be withdrawn by decision of the General Assembly.

1.21 CONTINENTAL CONFEDERATIONS

1.21.1 The purpose of the Continental Confederations is to maintain, to strengthen and to develop the sport of shooting in accordance with the Constitution and the Regulations of the ISSF and to strengthen the bonds of friendship and good relations among the Member Federations.

CamScanner

1.21.2 ISSF recognizes the Continental Confederations which are composed of National Federations belonging in principle to same territory of a Continent.

1.21.3 Each Federation may only belong to one single Confederation. A change of Confederation is subject to the approval of the parties involved including the ISSF Council.

1.21.4 The relationship between ISSF and the Confederation is regulated by specific ISSF Regulations or by contract.

1.21.5 ISSF recognizes the following five Continental Confederations:

- African Shooting Sport Federation (ASSF)
- Shooting Confederation of the Americans (CAT)
- Asian Shooting Confederation (ASC)
- European Shooting Confederation (ESC)
- Oceania Shooting Confederation (OSC)

1.21.6 The objectives of the Continental Confederations are:

1.21.6.1 To promote the shooting sport within its territory in a spirit of peace, understanding and fair play, without any discrimination on account of politics, gender, religion, race or any other reason;

1.21.6.2 To maintain good relations with and cooperate with the ISSF for the promotion and development of the shooting sport;

1.21.6.3 To organize Continental Championships on regular basis;

1.21.6.4 To organize ISSF competitions in agreement with the ISSF Executive Committee; To encourage the promotion of traditional Regional Championships and other major shooting competitions within the Continent;

1.21.6.5 To maintain relations between the National Member Federations in order to promote the development of shooting sport within the Continent;

1.21.6.6 To promote the exchange of experience by organizing lectures, debates, conferences or courses in close collaboration and in line with the ISSF policies;

1.21.6.7 To participate in realization of the ISSF development and educational programmes;

1.21.6.8 To promote the knowledge of the shooting sport through mass media.

1.21.7 The Continental Confederations must be represented in the ISSF Executive Committee and in the Council according to the following formula which determines the respective number of continental representatives for the electoral term:

1.21.7.1 Continental Confederation with up to 15 ISSF Member Federations – 1 Executive Committee member

1.21.7.2 Continental Confederations with 16-25 ISSF Member Federations – 1 Executive Committee member and 1 Council member

1.21.7.3 Continental Confederations with 26-35 ISSF Member Federations – 1 Executive Committee member and 2 Council members

1.21.7.4 Continental Confederations with 36-45 ISSF Member Federations – 1 Executive Committee member and 3 Council members

CamScanner

1.21.7.5 Continental Confederations with 46 and more ISSF Member Federations – 1 Executive Committee member and 4 Council Members

1.21.8 All representatives of the Continental Confederations in the Executive Committee and Council must represent different ISSF Member Federations and be elected by respective statutory bodies of the respective Continental Confederation.

1.21.9 Both genders must represent a Continental Confederation in the Council in case it may have more than two members in the Council.

1.21.10 The respective statutory body of a Continental Confederation may substitute its representative in the ISSF Executive Committee and the Council at any time but only once for the remaining term of office of the Executive Committee and the Council.

1.21.11 The Continental Confederations must submit reports on their activities to each meeting of the Council.

1.22 AUDITORS

1.22.1 The Executive Committee must appoint an external professional auditing company.

1.22.2 The appointed company must examine the accounts as well as financial documents and transactions and give a report to the Council and the General Assembly.

1.23 FINANCIAL POLICY

1.23.1 The financial year runs from January 1st to December 31st.

1.23.2 The yearly Preliminary Budgets and Balances must be approved by the Executive Committee upon proposal of the Secretary General.

1.23.3 In each meeting of the Executive Committee, the Secretary General must report on the financial status of the ISSF.

1.24 LANGUAGES

1.24.1 The following seven languages are recognized as the official languages of the ISSF during meetings: English, French, German, Russian, Spanish, Chinese and Arabic. The Executive Committee may permit the use of other languages in the meetings and the General Assemblies.

1.24.2 However, English is the permanent working language in which the Constitution, the regulations, rules and minutes as well as legal or official communications must be provided and published. The resolution of disputes must be conducted in the English language. The matters to be proposed for discussions at the General Assemblies must be sent by the Member Federations to the President or the Secretary General in the English language only.

1.24.3 In World and Continental Championships, the language of the host country may be used in the programme, instructions, announcements, etc. in addition to English.

1.24.4 Simultaneous translation into English, French and Spanish must be provided at General Assemblies. Simultaneous translation into Russian, German, Chinese and Arabic may be also provided at the General Assemblies upon request at

CamScanner

least ninety (90) days before the General Assembly of at least five (5) Member Federations. The Organizing Committee of the General Assemblies may add any language for simultaneous translation at their own cost.

1.24.5 In the case of disagreement in the interpretation of documents, the English text shall prevail.

1.25 RESOLUTION OF DISPUTES

Any final decision rendered by the ISSF may be submitted exclusively to the Court of Arbitration for Sport (CAS) in Lausanne, Switzerland, which will resolve the dispute definitively in accordance with the Code of sports-related arbitration. The language of the proceedings shall be English. The time limit for the appeal to be filed is twenty-one days after the reception of the decision concerning the appeal. Any decision taken by CAS will be final and binding on all parties concerned.

1.26 ALTERATION OF THE CONSTITUTION

1.26.1 Proposals must be submitted to the Secretary General at least three (3) months before the General Assembly and distributed to the Member Federations and Council at least two (2) months before the General Assembly.

1.26.2 The General Assembly may only adopt changes in the Constitution if at least half of all Member Federations with voting rights are present. In order to be valid, any change needs at least the support of two-thirds (2/3) of the valid votes cast.

1.27 DISSOLUTION OF THE FEDERATION

1.27.1 A demand for dissolution of the Federation must be received six (6) months before the General Assembly and mailed to all Member Federations and the Council five (5) months before the General Assembly.

1.27.2 The dissolution of the Federation must be approved by a three- quarters (3/4) majority in the General Assembly at which at least half (1/2) of all Member Federations with voting rights are represented.

1.28 REGISTRATION OF THE FEDERATION ACCORDING TO ARTICLES 2.2

1.28.1 The Federation has its Headquarters in Munich, Germany, and is legally registered under the name: “International Shooting Sport Federation, registered society (ISSF)” (*Internationaler Schiess- Sportverband, eingetragener Verein, ISSF)* by the Amtsgericht Muenchen, Registergericht VR 10152.

1.28.2 The Federation observes, exclusively and without reservation, beneficial purposes according to the section “Tax aid and abet” of the Tax laws of Germany. It acts selflessly and observes primarily non-profit making purposes.

1.28.3 Funds of the Federation may only be used for constitutional purposes. Members receive no financial gain from the Federation. No person must be privileged by expenditures which are contrary to the purposes of the Federation or by disproportionately high compensations.

CamScanner

1.28.4 In case of dissolution of the Federation or suspension of the tax exception by the German Government, any remaining assets must be given to the National Olympic Committee with the injunction for exclusive use for beneficial purposes for the international shooting sport.

1.28.5 Alterations to this Constitution and dissolution of the Federation must be reported to the Finance Office of the place of registry.

1.29 FINAL PROVISION

1.29.1 In ISSF provisions, the use of masculine form shall be interpreted also to refer to the feminine or any other genders.

1.30 APPROVAL

This Constitution was approved by the Extraordinary General Assembly of the UIT on July 27th, 1980 in Moscow, and replaced the “Constitution of the UIT, Edition 1978”. This edition includes amendments and corrections approved by the General Assemblies on July 15th, 1998 in Barcelona, ESP, on March 21st, 2000 in Sydney, AUS, on April 18th, 2004 in Athens, GRE, on April 10th, 2008 in Beijing, CHN, *and on 7th December 2019 in Munich, GER*.

1.31 TRANSITORY

1.31.1 All decisions taken according to the previous version of the Constitution will stay effective until they are realized or changed. All persons elected to any ISSF Body before this version of the Constitution became effective must complete their term of office. All amendments decided in the Extraordinary General Assembly on December 7th, 2019 in Munich, GER, shall become effective immediately, except indicated otherwise and except all changes in respect to the composition of ISSF Bodies and Articles 1.4.6.3 and 1.4.6.4 which shall become effective for and as of the first elections after 7th December 2019.

1.31.2 The Member Federations have to amend their Constitutions to be compliant with this new ISSF Constitution until 31 December 2020.

1.31.3 The Continental Confederations have to amend their Constitutions to be compliant with this new ISSF Constitution until 31 December 2021.

CamScanner

CamScanner

2
TERMS OF REFERENCE

This section contains a more detailed description of the roles and duties of all ISSF Officials and Personnel than the information contained within the Constitution, acting as support to The Constitution it is intended as guidance. It should be read alongside Section 1 The ISSF Constitution.

CamScanner

2.1 STATEMENT OF PRINCIPLE 31

2.2 DESCRIPTION OF FUNCTIONS 31

2.3 RULES FOR MEETINGS 32

2.4 RULES FOR COOPERATION BETWEEN SECTION COMMITTEES AND THE TECHNICAL COMMITTEE 33

2.5 ISSF HEADQUARTERS 34

CamScanner

2.1 STATEMENT OF PRINCIPLE

2.1.1 Every person elected to a position in any ISSF body serves solely in the interest of, and is responsible to the Federation. In performing his responsibilities he must ensure that all provisions of the Constitution, General Regulations and other rules of the ISSF will therefore be given priority in all decisions.

2.1.2 All persons elected or appointed to the ISSF serve on an honorary basis and without salary.

2.1.3 By accepting election or appointment everyone agrees to devote the time necessary to accomplish the duties required by their position.

2.2 DESCRIPTION OF FUNCTIONS

2.2.1 President

Objectives

Successful leadership and direction of the ISSF ensuring a balanced promotion of all sections and activities of the amateur shooting sport and also observing the needs of tradition and development.

Principal Duties and Responsibilities

Convenes and presides over Assemblies and meetings according to the Constitution.

Supervises the execution of decisions; activities of ISSF bodies; ensures the proper observance of the Constitution, General Regulations and other rules.

Ensures that the ISSF obligations to Member Federations, Continental Confederations, Organizing Committees and International or National Sport Organizations are fulfilled. Represents the ISSF in legal matters in conjunction with the Secretary General.

Acts on behalf of, or represents, the ISSF, as circumstances require.

Authority

Acts as Chairman of the General Assembly, the Administrative Council and the Executive Committee.

Acts in urgent cases on matters not provided for in the Constitution or General Regulations. Such actions, however, require subsequent approval by the Administrative Council or Executive Committee.

2.2.2 Vice-Presidents

Objectives

Support and assist the President in leading and directing the ISSF.

Principal Duties and Responsibilities

As delegated by the President, convene and preside at ISSF meetings in the President's absence or at his request.

Carry out duties assigned by the Administrative Council or Executive Committee or as requested by the President.

Perform special assignments or assist and supervise specific parts of ISSF activities on a permanent basis on request of the Executive Committee or the President.

CamScanner

Authority

Act on behalf of the President in his absence or on his request.

2.2.3 Secretary General

Objectives

Operates the Headquarters for efficient conduct of all ISSF business.

Principal Duties and Responsibilities

Represents the ISSF in legal matters together with the President.

Acts as ISSF Treasurer.

Represents the President at his request.

As set-out in 1.11.2.6 the Secretary General can attend meetings of all Committees but does not have a vote, this includes the Executive Committee.

Performs duties defined in description of Headquarters operations.

Authority

Full authority over all ISSF employees. For further details see description of Headquarters operations.

2.2.4 Members of the Committees

Objectives

Assistance, support and advice to the Administrative Council and the Executive Committee in all matters assigned to them.

Principal Duties and Responsibilities

All Committees of the ISSF shall deal with all matters within their field of interest as an advisory body and shall be responsible for the technical and other activities assigned to them by the Constitution or the Administrative Council and the Executive Committee.

All members of the Committees act and vote as independent members and not as representatives of their National Federations.

Each Chairman must designate his substitute in the event of his absence, and a Recording Secretary for each meeting.

Authority

Each Chairman represents his Committee in the Administrative Council. The Committee

Chairman may act on behalf of his Committee in urgent cases, and on request of the President, Secretary General, the Administrative Council, or the Executive Committee. He must inform his Committee members of any action taken.

2.3 RULES FOR MEETINGS

2.3.1 Frequency

The ISSF Committees meet as stated in the Constitution, on request of the President, Secretary General, the Administrative Council, or the Executive Committee, or on request by a Committee Chairman.

CamScanner

If possible meetings shall be scheduled in conjunction with World Championships or other important shooting sport events.

2.3.2 Notices

Notices for Committee meetings will be sent by the Secretary General. For this purpose the Chairman must submit the agenda, documents and any other information for the meeting early enough to permit mailing of the notices at least two (2) months in advance of the meeting date.

2.3.3 Recording Secretary

The Chairman must appoint a Recording Secretary for each meeting. The Recording Secretary will prepare minutes, which must be signed by the Chairman after agreement by the members who attended. The minutes must be submitted to the Secretary General within two (2) months of the meeting.

2.3.4 Order of Business

2.3.4.1 Appointment of Recording Secretary.

2.3.4.2 Roll-call of Members attending.

2.3.4.3 Reading and approval of the minutes of the previous meeting.

2.3.4.4 Review of Actions and Outstanding business from these minutes.

2.3.4.5 New business on the agenda.

2.3.4.6 Recommended place, date and time of the next meeting.

2.3.5 Quorum and Voting Procedure

A quorum in Committee meetings is 50 % of the members (including the Chairman), unless otherwise stated in the Constitution. Proxy voting is not permitted. Each member of the Committee has one (1) vote. The Chairman in the case of a tie, shall cast the deciding vote. All decisions are taken by open ballot, except when a secret vote is requested by 50 % or more of the members present. A postal vote may be conducted in the interval between meetings. When a postal vote is required, the Chairman must send to each member (and a copy to the ISSF Headquarters) a clear statement of the question to be voted upon, with a request that each member must return his vote before a stated date. Within eight (8) days of closing the postal vote, the Chairman must send a report and the result of the vote to the ISSF Headquarters. A non-response will be taken to signify an affirmative vote.

2.4 RULES FOR COOPERATION BETWEEN SECTION COMMITTEES AND THE TECHNICAL COMMITTEE

Whenever a Section Committee deals with matters concerning the formulation of shooting regulations or rule interpretation (Art. 1.12.4 of the Constitution), the Chairman must submit a report and copy of the documents to the Chairman of the Technical Committee within 10 days after the meeting (Art. 1.13.1.1, 1.13.1.2 and 1.13.1.3 of the Constitution). If the Technical Committee considers that a re-examination of the proposal is necessary, the Chairman of the Technical Committee will inform the Chairman of the Section Committee concerned as soon as possible, however, not later than two (2) months after receipt of the proposals.

CamScanner

2.5 ISSF HEADQUARTERS

2.5.1 The ISSF Headquarters, under direction of the Secretary General, conducts the business of the ISSF. Correspondence, preparation of circular letters and reports, preparation and mailing of summons to meetings are, among others, the duties of the Headquarters.

2.5.2 All work, communications and decisions arising from the Constitution or action by the General Assembly, the Administrative Council and the Executive Committee is carried out as a matter of course by the Headquarters under supervision of the Executive Committee. The Secretary General is directly responsible to the President for operation of the Headquarters.

2.5.3 All affairs related to finances such as accounting and ISSF budget preparation are performed by the ISSF Headquarters. The President of the ISSF is kept currently informed as to the state of affairs and must give his approval on all important matters. A short financial report is presented at each meeting to the Administrative Council and the Executive Committee.

2.5.4 The President, Administrative Council Members and Executive Committee Members will all receive a copy of documents concerning any matter of special importance.

2.5.5 The Secretary General is the employer of all who work in the Headquarters of the ISSF. This will be in conformity with the labour laws in effect at the headquarters of the ISSF, with regard to all related matters. The Executive Committee and the Administrative Council will be informed of all current important personnel matters at their next meeting.

2.5.6 The Secretary General will work independently, within the limits of his authority. In his capacity as Secretary General, and as a member of the Executive Committee, he has the right and duty at all times to coordinate the work of the various ISSF bodies. He is responsible for covering the financial obligations of the ISSF while remaining within the budget. The direction of the transactions and entering into contracts with other organizations, sporting or otherwise, commercial firms, etc. are within the usual authority of the Secretary General; however, the President and the ISSF bodies concerned must be made aware of all such transactions or contracts.

CamScanner

3
GENERAL REGULATIONS

CamScanner

3.1 **PURPOSE** 37
3.2 **ISSF CHAMPIONSHIPS** 37
3.3 **ISSF EVENTS** 39
3.4 **RANKING SYSTEM** 40
3.5 **ADMINISTRATION AND CONTROL OF THE ISSF CHAMPIONSHIPS** 40
3.6 **RANGES AND OTHER FACILITIES** 42
3.7 **PARTICIPATION AND ISSF ATHLETES** 43
3.8 **COMPETITION PROCEDURES** 45
3.9 **PROTOCOL** 47
3.10 **RECORDS** 48
3.11 **MEDIA RELATIONS** 48
3.12 **GENERAL** 49
3.13 **ANNEXES** 49
3.14 **APPROVAL** 49

CamScanner

3.1 PURPOSE

3.1.1 The General Regulations of the International Shooting Sport Federation (ISSF) govern shooting sport competitions (Championships) according to Articles 1.1.4.1, 1.1.4.8 and 1.1.4.9 ISSF Constitution.

3.2 ISSF CHAMPIONSHIPS

3.2.1 ISSF Championships are divided in three categories concerning the requirements for Organizers and the conditions that they have to fulfil:

Those requirements are specified in the Guidelines for Organizing ISSF Championships (A separate Manual, available at the ISSF Headquarters).

Level 1

- World Championships
- World Championships Rifle/Pistol
- World Championships Shotgun
- Final Tournament of the Year
- World Cups with Olympic Quota Places allocation
- Continental Championships/Continental Games with Olympic Quota Places allocation

Level 2

- World Cups
- World Championships Running Target
- World Championships Juniors
- Youth Olympic Games Qualifying competitions
- Continental Championships

Level 3

- Grand Prix tournaments
- Other competitions organized according to the ISSF Rules and Regulations

3.2.2 The ISSF Championships are organized by Member Federations that are chosen by the Executive Committee.

3.2.3 **World Championships**

3.2.3.1 World Championships for all events must be organized every four years, two years after the Olympic Games. In other years, with the exception of the year in which the Olympic Games take place, separate World Championships for Shotgun as well as Rifle and Pistol events must be organized. World Championships Juniors for all events must be organized every two years in the year of the Olympic Games and the second year after the Olympic Games (even numbered years). Continental Championships should be organized at least every two (2) years as decided by the respective Continental Confederations.

[As of 1 January 2025 (i.e., relevant for World Championships to be organized starting from the year 2025) the following provision applies]:

CamScanner

3.2.3.2 World Championships for all events among Men and Women must be organized every four years, two years after the Olympic Games. In other years, with the exception of the year in which the Olympic Games take place, separate World Championships for Shotgun as well as Rifle and Pistol events among Men and Women must be organized.

World Championships Juniors for all events among Men Junior and Women Junior must be organized every two years in the year of the Olympic Games and the second year after the Olympic Games (even numbered years).

In other years (uneven numbered years), separate World Championships Juniors for Shotgun as well as Rifle and Pistol events among Men Junior and Women Junior must be organized.

Continental Championships should be organized at least every two (2) years as decided by the respective Continental Confederations.

3.2.4 **Application for ISSF Championships**

A Member Federation desiring to organize an ISSF Championship must submit its application to the Secretary General at least one (1) month in advance of the Executive Committee meeting where the host federation will be chosen.

3.2.4.1 The application should include:

a) An official statement from the appropriate government agency and/ or National Olympic Committee, indicating the support to be given to the organization of the Championships;

b) A statement that all the requirements of the ISSF Constitution will be observed;

c) A statement that the organizing federation will invite all ISSF Member Federations;

d) A description of the existing or proposed shooting ranges and other necessary facilities that must meet ISSF requirements;

e) Information regarding the proposed organization, cost of accommodation, time of transportation to and from ranges, transportation fees for transfer airport – official hotel – airport and any training fees;

f) A statement listing the events the Federation proposes to include in the programme.

3.2.5 If no application is received, or if the Federation selected to organize the World Championships withdraws, the Executive Committee must select another Federation to organize the World Championships. Or, if no single Federation can be found, select neighbouring Federations to organize the World Championships together in separate groups of events.

3.2.6 Withdrawal is only possible with the approval of the Executive Committee. Unapproved withdrawal is subject to the assessment of a fine, or the suspension of membership or the suspension of participation at ISSF Championships for a certain time to be decided by the Council.

CamScanner

3.3 ISSF EVENTS

3.3.1 Events recognized by the ISSF in Rifle, Pistol and Shotgun disciplines are:

Name of Event
10m Air Rifle
50m Rifle 3 Positions
50m Rifle Prone
300m Rifle 3 Positions
300m Rifle Prone
300m Standard Rifle
10m Air Pistol
25m Pistol
25m Rapid Fire Pistol
25m Centre Fire Pistol
25m Standard Pistol
50m Pistol
Trap
Double Trap
Skeet
10m Running Target
10m Running Target Mixed
50m Running Target
50m Running Target Mixed
Target Sprint

3.3.2 The ISSF recognizes individual, Mixed Team, Team and Open events.

3.3.2.1 Individual events are events in which individual athletes of the same gender compete against each other.

3.3.2.2 Mixed Team events are for the Teams with two members, one of each gender.

3.3.2.3 Team events are for Teams with three (3) members of the same gender. Only full Teams of three (3) athletes will be ranked in the Team results list.

3.3.2.4 Open events are individual events with athletes of both genders competing together in one event.

3.3.3 Formats of the ISSF recognized events must be approved by the Executive Committee.

3.3.4 New events can be added to the list of ISSF recognized events after the following conditions have been met:

3.3.4.1 the appropriate ISSF Committee develops rules for the event,

CamScanner

3.3.4.2 the Executive Committee (Article 1.8.2.5 ISSF Constitution) approves the rules.

3.3.5 Olympic Events (ISSF recognized events included in the programme of the Olympic Games by the IOC)

Olympic Events are conducted in accordance with Rifle, Pistol and Shotgun Technical rules approved by the Executive Committee in accordance with Article 1.8.2.12 of the ISSF Constitution. Each Olympic event has a "Qualification" round and a "Final."

3.3.6 **Programme of the ISSF Championships**

3.3.6.1 The programme of the ISSF Championships is composed of the ISSF recognized events and must be approved by the Executive Committee.

3.3.6.2 The mandatory events of the respective ISSF Championship programme are determined by the Executive Committee and additional events may be included upon proposal by the Organizers.

The list of mandatory events approved by the Executive Committee can be found at the start of section 6 General Technical Rules.

3.3.6.3 If 300m Rifle events cannot be included, the Executive Committee should choose a national federation to organize a separate 300m Rifle World Championship in the same year as the World Championships.

3.3.6.4 If Running Target events cannot be included, the Executive Committee should choose a national federation to organize a separate Running Target World Championship in the same year as the World Championships.

3.3.6.5 In all ISSF Championships a "Qualification" round and the "Final" are conducted in the Olympic events in Individual, Mixed Team, and Team events that are part of the respective Championship's programme.

3.3.7 Events in the Continental Championships are decided by the Continental Confederations and must be events recognized by the ISSF.

3.4 RANKING SYSTEM

3.4.1 The ISSF establishes official Rankings that determine the placing of athletes according to their achievements in the ISSF Championships during a designated time frame.

3.4.2 The ISSF Ranking system is established by the Executive Committee.

The current ISSF Ranking system can be found under Annex 3 to the General Regulations.

3.5 ADMINISTRATION AND CONTROL OF THE ISSF CHAMPIONSHIPS

3.5.1 **General**

3.5.1.1 After the host of the ISSF Championship is approved by the Executive Committee, the ISSF and the respective National Federation must sign the Host Federation Agreement (HFA) within 30 days after the approval.

3.5.1.2 Every National Federation that earns the right to host the ISSF Championship must create an Organizing Committee responsible for administrating and delivering the Championship according to ISSF General Regulations, the HFA and the Guidelines for Organizing ISSF Championships.

CamScanner

3.5.1.3 The National Federation and the Organizing Committee must work in close cooperation with the ISSF Headquarters and the Technical Delegate/s.

3.5.2 To coordinate the cooperation with Organizers of the ISSF Championships and to control the fulfilment of all the obligations for the preparations of the competitions by the Organizers, the ISSF Executive Committee appoints one (1) or two (2) Technical Delegates.

3.5.2.1 In order that the Technical Delegates can carry out these responsibilities, they must be invited at the expense of the ISSF to the site of the Championships at least once, 10 to 12 months before the Championship, and again, not less than three (3) days before the official arrival day.

3.5.2.2 Technical Delegates must have experience of officiating at major ISSF Championships and shall not be members of the federation(s) hosting the respective ISSF Championship.

3.5.3 To control the fulfilment of the ISSF General Technical Rules during the competitions and to guarantee the objective outcome of official results and rankings, a Competition Jury must be appointed for all ISSF Championships.

3.5.3.1 Members of the Competition Jury must be approved by the Executive Committee.

3.5.3.2 The Competition Jury must include judges with experience of officiating at major ISSF Championships in respective disciplines, result production and equipment control.

3.5.3.3 The exact number of the Competition Jury members depends upon the level of the ISSF Championship, the competition schedule, and the existence of sufficient numbers of experienced range officers, supporting officials and referees provided by the Organizers.

3.5.3.4 All members of the Competition Jury must have a valid respective ISSF Judges licence.

3.5.3.5 The Chairman of the Competition Jury is personally responsible for the objective outcome of all results and rankings at the ISSF Championship.

3.5.3.6 Technical Delegates are authorized to create a Jury of Appeal, if necessary.

3.5.3.7 The Jury of Appeal must consist of three (3) to five (5) members, including a chairman. One (1) member should be from the national federation organizing the Championship.

3.5.4 The travel expenses of the Technical Delegates, Jury members and other ISSF appointed officials are borne by the Organizing Committee up to a maximum of €1,300. A per diem of €50,00 per day is paid by the ISSF.

The costs for accommodation of the Technical Delegates, Jury Members and the ISSF appointed officials are borne by the Organizing Committee.

The costs for the local transportation of the Technical Delegates, Jury Members and other ISSF appointed officials are borne by the Organizing Committee.

CamScanner

3.6 RANGES AND OTHER FACILITIES

3.6.1 The following range installations are required:

	World Championships	Olympic Games	World Cups	Grand Prix	Final Hall/Range
300m targets	40	--	--	--	--
50m targets	80	60	60	40	10
25m targets	10 groups	6 groups	8 groups	6 groups	3 groups
Trap	5	3	5	3	1
Double Trap	2	--	--	--	--
Skeet	5	3	5	3	1
50m Running Target Ranges	2	--	--	--	--
10m Running Target Ranges	4	--	--	--	--
10m Air Rifle and Air Pistol	80	60	60	40	10

3.6.1.1 Upon any proposal of the Organizers and approval of the Executive Committee the number of 10m and 50m targets in the Qualification Hall can be lower than indicted in 6.4.1, dependent on the expected number of participants and the preliminary competition schedule.

3.6.1.2 Upon any proposal of the Organizers and approval of the Executive Committee the number of Trap and Skeet ranges for Qualification can be lower than indicated in 6.4.1, but a Final Range must be provided.

3.6.2 **Result Production**

3.6.2.1 The competitions venue must be equipped in accordance with the official ISSF General Technical Rules.

3.6.2.2 Electronic target systems, of makers and models approved by the ISSF must be used for Rifle and Pistol events Qualification and Final stages at all ISSF Championships.

3.6.2.3 The ISSF Technical Delegates are responsible for examining the ranges and other facilities to ensure that they meet ISSF standards and are suitable for conducting Championships. The Technical Committee will provide checklists in accordance with the ISSF Rules and Regulations for use by the Technical Delegates in examining the ranges and facilities (available from ISSF Headquarters).

3.6.2.4 Ranges to be used for World Championships should be completed one (1) year in advance. If the range is not completed, the detailed plans, construction schedule and financial plan must be submitted to the Secretary General one (1) year in advance, and the range must be completed three (3) months in advance.

CamScanner

3.7 PARTICIPATION AND ISSF ATHLETES

3.7.1 Only ISSF Member Federations may participate in the ISSF Championships. Member Federations participating in Continental Championships and Continental Games must be members of the Continental Confederation.

3.7.2 An ISSF Member Federation that is not accepted as a member by its own Continental Confederation, or is not allowed to participate in its own Continental Championships, may be invited by another Continental Confederation to participate in its Continental Championships and Continental Games with the right to awards and records.

3.7.3 Team officials participating in ISSF Championships must abide by the ISSF Rules and Regulations

3.7.4 **ISSF Athletes**

3.7.4.1 To participate in any of the ISSF Championships all athletes must obtain an ISSF ID Number and sign an “Athlete’s Declaration”.

3.7.4.2 Any athlete must be a national of the country he/she represents.

3.7.4.3 All disputes relating to the determination of the country which an athlete may represent shall be resolved by the ISSF Executive Committee.

3.7.4.4 An athlete who is a national of two (2) or more countries at the same time may represent either one (1) of them, as he may select. However, after having represented one (1) country in the Olympic Games or in any ISSF Championships, he may not represent another country unless he meets the conditions set forth in paragraphs below that apply to persons who have changed their nationality or acquired a new nationality.

3.7.4.5 An athlete who has represented one (1) country in the Olympic Games or in any ISSF Championship, and who has changed his nationality or acquired a new nationality, may participate in ISSF Championships to represent his new country provided that at least three (3) years have passed since the athlete last represented his former country. This period may be reduced or even cancelled, with the agreement of the Federations concerned and the ISSF Executive Committee, which takes into account the circumstances of each case.

3.7.4.6 If an associated State, province or overseas department, a country or colony acquires independence, if a country becomes incorporated within another country by reason of a change of border, if a country merges with another country, or if a new NOC is recognized by the IOC, an athlete may continue to represent the country to which he belongs or belonged. However, he may, if he prefers, elect to represent his country or be entered in ISSF Championships by his new Federation when recognized by the ISSF. This particular choice may be made only once.

3.7.4.7 Furthermore, in all cases in which an athlete would be eligible to participate in ISSF Championships, either by representing another country than his or by having the choice as to the country which such athlete intends to represent, the ISSF Executive Committee may take all decisions of a general or individual nature with regard to issues resulting from nationality, citizenship, domicile or residence of any athlete, including the duration of any waiting period.

3.7.4.8 The period following naturalization may be reduced or even cancelled with the agreement of the two (2) National Federations concerned and the final approval of the ISSF Executive Committee.

CamScanner

3.7.4.9 After naturalization and change of nationality an athlete must obtain a new ID number reflecting the new nationality.

3.7.4.10 An official declaration of eligibility for each athlete will be required from the Member Federation.

3.7.4.11 Age of ISSF Athletes

There is no age limit for participation in ISSF Championships.

3.7.4.12 Juniors

Athletes will remain as Juniors until the 31st December of the year in which they become 21 years of age. Any athlete born between the 1st January and the 31st December, will cease to be a Junior on the 31st December of that year. Juniors may participate in all ISSF Championships and the Olympic Games as members of their national team.

3.7.4.13 The final ranking at the ISSF Championships can be established showing Juniors but an athlete can be part of the final ranking in one category only.

3.7.4.14 Events for Juniors should be chosen from the recognized ISSF events, or be events designed to support the development of junior athletes.

3.7.4.15 Events for Juniors should be included in Continental Championships by decision of the Continental Confederation.

3.7.5 **The number of participants in the ISSF Championships**

3.7.5.1 The number of participants from each nation is determined by the ISSF Executive Committee.

3.7.5.2 In the World Championships each nation can enter a maximum of three (3) athletes in Individual events, two (2) Mixed Teams in respective Mixed Team events and one (1) Team in the respective Team events.

3.7.5.3 In the World Championships, each nation can enter a maximum of six (6) Junior athletes in Individual Events. A maximum of three (3) athletes of one nation (the three top ranked after Qualification) may proceed to the Final.

3.7.5.4 In the other ISSF Championships each nation can enter a maximum of five (5) athletes in individual events but only three (3) of them can be registered to compete in the Final for the medals. The other two (2) can only compete for the ranking points.

3.7.5.5 Any of the athletes entered in an ISSF Championship can be registered for the Mixed Team and Team events while respecting the number of Mixed Teams and Teams allowed to be entered by one nation.

3.7.5.6 Replacements of the athletes may be made only in the Team events, but only from those already registered for this Championship.

3.7.5.7 When events for Juniors are scheduled in the World Championships, the number of athletes allowed per event is the same as in the World Championship Juniors.

3.7.5.8 In World Championships, juniors may participate in the men’s and the women’s competitions, but in one (1) category only at the same Championships (place and dates).

CamScanner

3.7.5.9 If there is no particular junior event in a Championship, juniors may participate in this event as a member of the national team, even if they participate in another junior event in the same Championship.

3.7.5.10 The participating federation is responsible for the travel and living expenses of team members. The Organizing Committee must provide transportation from the local airport or railway station to the official hotels and from the official hotels to the range. The cost for transfer from the airport(s) to the official hotels and back may be charged when approved by the Executive Committee of the ISSF.

3.8 COMPETITION PROCEDURES

3.8.1 The ISSF General Regulations and the applicable current ISSF General Technical Rules and respective rules for the disciplines will govern the conduct of events in all ISSF Championships.

3.8.2 **Programmes**

3.8.2.1 The Preliminary Programme prepared by the Organizing Committee must be submitted by the Technical Delegate to the ISSF Secretary General for examination at least 8 months prior to the Championship.

3.8.2.2 The schedule for the mandatory events of the World Championships should not exceed sixteen (16) days. At the option of the Organizing Committee, the ranges may be opened for additional training days before official training begins.

3.8.2.3 The Final Programme prepared by the Organizing Committee must be submitted by the Technical Delegate for approval by the ISSF Secretary General at least 6 months prior to the Championship.

3.8.2.4 The General Information letter prepared by the Organizing Committee must be distributed among the Member Federations upon approval by the Technical Delegate at least 5 months prior to the Championship.

3.8.3 **Entries**

3.8.3.1 Preliminary Entries

Each national federation entering the Championship must submit a preliminary entry to the Organizing Committee. The preliminary entry must list all individual, Mixed Team and Team events in which the national federation will participate. Preliminary entries must be received by the Organizing Committee at least thirty (30) days before the official arrival day. Any Preliminary entry sent after this date will be entered on a waiting list according to the date of the receipt of the entry and it may be that the participation is only possible if targets/places are available. The Organizing Committee must inform the Nations in question of any such change immediately after these entries are received.

3.8.3.2 Final Entries

Final Entries must be entered in the ISSF on-line registration system forwarded directly to the ISSF by fax or e-mail before midnight (Munich time) of the 30th day before the official arrival day. The final entries to the ISSF may be made via the ISSF online registration. The final entry must list the names and ID Numbers of all athletes. The final entry must list the names and dates of birth of all officials with their function. All Final entries must be completed at least three (3) days before the official arrival day.

CamScanner

3.8.3.3 Any additional entries received after the deadline of three (3) days before the official arrival day may be rejected by the Organizing Committee.

3.8.3.4 Replacement of a registered athlete by another already registered athlete for that Championship is permitted. This change can only be made before12:00 pm (noon) on the day before the Pre-Event Training for that event.

3.8.4 **Fees**

3.8.4.1 Entry fees must be paid to the Organizing Committee upon request.

3.8.4.2 The following Entry fees are applicable (amounts in Euro):

a) World Championships and World Cups:

- Individual entry – 170;
- Mixed Team – 170;
- Team – 170; - Official – 50.

b) World Championships Juniors:

- Individual entry – 170;
- Mixed Team – 100;
- Team – 150; - Official – 50.

c) Grand Prix tournaments:

- Individual entry – 120;
- Mixed Team – 120;
- Team – 120; - Official – 50.

3.8.4.3 A reasonable fee for training that is not part of the Championship's schedule may be charged when approved by the Executive Committee.

3.8.4.4 Any federation reducing the number of athletes and / or officials after the Final Entry Deadline is obligated to pay all applicable fees and costs including entry fees according to the number of athletes and entries on the Final Entry Forms originally received. If the applicable fees and costs are not paid no member of that federation may participate.

3.8.4.5 Any entry requested and accepted after the final entry deadline will incur a late entry fee of 50 Euro for each athlete entered in each event.

3.8.4.6 The Entry fees for the Continental Championships are established by the Continental Confederations.

3.8.5 **Information to be sent to ISSF Headquarters by the Organizer/the Organizing Committee**

3.8.5.1 Copies of all invitations, programmes and entry forms for all ISSF must be sent to the Secretary General.

3.8.5.2 One (1) copy of the official result lists of each event must be sent to the ISSF Headquarters via Fax and/or e-mail immediately after it has been verified, but not later than the end of the competition day.

3.8.5.3 Three (3) copies of the official result lists must be sent to the ISSF Secretariat no later than three (3) days after the completion of the events. A list showing the number of countries and the number of athletes participating in each discipline, by events, must be included with the results lists.

CamScanner

3.8.6 **Doping Control**

Doping control at all ISSF Championships must be done in all events and categories as specified in the ISSF Anti-Doping Rules.

3.8.7 **Olympic Games**

3.8.7.1 The athletes' participation quota at the Olympic Games in established by the IOC.

3.8.7.2 The Qualification system is established by the ISSF Executive Committee and approved by the IOC.

3.8.7.3 The ISSF supervises the Olympic Games through one (1) or two (2) Technical Delegates approved by the ISSF Executive Committee.

3.8.7.4 In order that the Technical Delegates can carry out their responsibilities they must be invited at the expense of the Organizing Committee to the site of the Olympic Games at least two times in the years leading up to the Games, one of which must be 10 to 12 months before the Games. This is in addition to any Test Event and the Games themselves where the TDs are to arrive not less than five (5) days before the Opening Ceremony.

3.8.7.5 Programmes, schedules, forms and other details must be received by the ISSF, checked and agreed with the Organizing Committee.

3.8.7.6 Entries in the Olympic Games must be made using the procedures specified in the ISSF General Regulations except that schedules or special procedures established by the ISSF or IOC will prevail.

3.8.7.7 Anti-Doping Control in the Olympic Games will be conducted according to the procedures established by the IOC. Anti-Doping Control in all ISSF Championships will be conducted in all events and categories according to procedures established by the ISSF Anti-Doping Regulations.

3.9 PROTOCOL

3.9.1 The holding and the format of an opening and closing ceremonies at ISSF Championships are guided by the applicable ISSF Guidelines for Organizing ISSF Championship.

3.9.2 In the ISSF Championships the Organizing Committee must award:

3.9.2.1 Championship medals in gold, silver and bronze colours to the first three (3) individual event winners. A minimum of 15 athletes in individual events or 10 athletes in junior individual events must participate in order that individual medals shall be awarded.

3.9.2.2 Championship medals in gold, silver and bronze colours to each member of the first three (3) Mixed Team events winners. A minimum of ten (10) Mixed Teams in each of the events must participate in order that Mixed Team medals shall be awarded.

3.9.2.3 Championship medals in gold, silver and bronze colours to each member of the first three (3) Team events winners. A minimum of five (5) Teams in each event must participate in order that Team medals shall be awarded.

3.9.3 If the above-mentioned minimums of participants are not reached, the event will be declared an "International Championship" of the nation which organized the competitions.

CamScanner

3.9.4 A commemorative medal, of a different design from the Championship medals shall be given by the Organizing Committee to each athlete, team official, judge and delegate.

3.9.5 The design of all official awards and the official symbol must be submitted to the Secretary General for approval by the Executive Committee at least two (2) months in advance.

3.9.6 A Medal ceremony must be held for each Championship event, at which the flags of the first three (3) winners in Individual, Mixed Team or Team must be raised while the anthem of the winner's nation is played.

3.10 RECORDS

3.10.1 Records may be established in all recognized ISSF events in the Olympic Games and all ISSF Championships.

3.10.2 ISSF recognizes Historical records, Olympic records, World Championship records and Venue records.

3.10.2.1 Historical records are records established before December 31, 2020 in all recognized ISSF men's, women's, and juniors' events in Olympic Games and World Championships, World Cups, World Cup Finals, Continental Championships and Continental Games conducted according to the ISSF Rules and Regulations.

3.10.2.2 Olympic records are records established at the Olympic Games and Youth Olympic Games.

3.10.2.3 World Championship records are records established at the World Championships and World Championships Juniors.

3.10.2.4 Venue records are records established at a specific venue (shooting range) during any ISSF Championship.

3.10.2.5 Records can be established in Qualification (Qualification part 1, if there is more than one part in Qualification) only.

3.10.3 The ISSF will issue a Record diploma to individual athletes, Mixed Team or Team members who establish a Records.

3.10.4 The Technical Delegate(s) must submit reports for recognition of the Records.

3.11 MEDIA RELATIONS

3.11.1 The Media Coverage, Broadcasting and Advertising Rights of all ISSF World Championships, World Cups and other ISSF official events (General Assemblies, Congresses, etc.) are the property of the International Shooting Sport Federation.

3.11.2 Press, radio and television services must be given all cooperation and assistance to ensure the free flow of public information and communication. Necessary facilities including telecommunications, must be available prior to and during the Championships.

3.11.3 Provisions for interviews, photography and other media requirements will be made by the Organizing Committee to ensure that media personnel have access to athletes and team leaders; provided that such arrangements do not inconvenience the individual(s) concerned. Media representatives may communicate with athletes through their respective team leaders.

CamScanner

3.12 GENERAL

3.12.1 Alterations of the General Regulations may only be made by the Council in accordance with Article 1.7.3.1.a) ISSF Constitution.

3.12.2 Upon approval, alterations become effective upon publication on the ISSF Website.

3.13 ANNEXES

3.13.1 The General Regulations may be extended by the Council or the Executive Committee by annexes.

3.13.2 The annexes to the General Regulations may not contravene the General Regulations.

3.14 APPROVAL

These General Regulations were approved by the Ordinary General Assembly of the ISSF on October 30th, 1982 in Caracas, Venezuela, and replace the “General Regulations, edition 1977” and became effective on November 15th,1982 (revised, amended and corrected by the General Assembly of ISSF on July29th, 1988 in Madrid, ESP). This edition includes amendments and corrections approved by the General Assemblies of the ISSF on August 14th, 1990 in Moscow, URS and on April 27th, 1992 in Barcelona, ESP and on July 22nd, 1994 in Milan, ITA, on April 20th, 1996 in Atlanta, USA and on July 15th, 1998 in Barcelona, ESP, on 21st March 2000 in Sydney, AUS, on April 18th, 2004 in Athens, GRE, on April 10th, 2008 in Beijing, CHN on June 25th, 2017 in Munich, Germany, by the Extraordinary General Assembly on November 30th, 2019 in Munich, Germany and by the ISSF Council in January, June and September 2020 and June 2022.

CamScanner

Article 3.12.3.1, Annex “Q”

Special Regulations for the Participation in the Shooting Sport Events of the Olympic Games in Paris 2024

To follow

CamScanner

Article 3.12.3.2, Annex “D”

Athlete Declaration and ISSF ID Number Application Form

1. To participate in ISSF Championships it is mandatory for all athletes to have an ISSF Identification Number (ISSF ID Number).
2. The ISSF Member Federation of the athlete must submit an application for the issue of the ISSF ID Number on the form that follows.
3. Each athlete must be a national of the country that they represent and must provide a copy of the passport with their application.
4. Each athlete may only apply for one (1) ISSF ID Number.
5. A fee of Euro 50.00 is charged for the issue of each ID Number.
6. The ISSF Member Federations must send all applications for ISSF ID Numbers to the ISSF. Only typed or e-mail application(s) will be accepted.
7. The ISSF will send the ISSF Member Federations a list with all new ISSF ID Numbers within 14 days after the application(s) are submitted. The ISSF Member Federations must check and approve this list and return it to the ISSF. No response will be taken as approval.
8. Express application (issue within one (1) week) increases the fee to Euro 100.00.
9. If an athlete changes his/her name or nationality, the ISSF must be notified without delay, so that necessary changes can be made by the ISSF. The original ISSF ID Number will not change, but the ISSF must correct data associated with the ISSF ID Number.

CamScanner

ISSF Athlete Declaration

1. I hereby confirm that I am aware of the rules and regulations of the ISSF and penalties in force for the official competitions of ISSF, including the rules relating to the fight against doping. I agree to submit to the doping control tests, to accept the results of such tests and to abide by the respective regulations in their prevailing form at any given time.
2. I agree that any dispute arising between myself and ISSF which cannot be settled amicably and which remains once the procedures provided for in the ISSF Regulations have been exhausted, shall be settled finally by a tribunal composed in accordance with the Statute and Regulations of the Court of Arbitration for Sport, Lausanne, to the exclusion of any recourse to ordinary courts. The parties undertake to comply with the said Statute and Regulations and to accept in good faith the award rendered and in no way hinder its execution.

Date	Place
Signature athlete	
In case of minor age, name of legal representative	
Signature of legal representative	

CamScanner

Application Form for the Issue of an ISSF ID Number

The ISSF Member Federation of

herewith applies for the issue of an ISSF ID Number which is necessary for the participation in ISSF supervised competitions and championships for the following athlete:

Family Name(s):						
Given Name(s):						
Maiden Name(s):						
Nationality:						
Preferred name for public use (for use with media, result lists, etc.)	First Name			Family Name		
Gender:	Male			Female		
Date of Birth:	Day		Month		Year	
Event(s):	Rifle ☐	Pistol ☐	RT ☐	Trap ☐	DT ☐	Skeet ☐
Name who signs for federation:						
Signature of federation:						

CamScanner

Francais:	
1.	Je reconnais avoir pris connaissance de la réglementation et des sanctions en vigueur dans les compétitions oficielles de l´ISSF en ce qui concerne la lutte contre le dopage. Je donne mon accord pour me soumettre aux tests de contrôle de dopage, accepter les résultats de ces tests, me soumettre au règlement concerné sous la forme en vigueur à tout moment donné.
2.	J´accepte que tout litige survenant entre moi-même et l´ISSF, lequel ne pourrait être réglé à l´amiable et subsisterait après toutes les procédures prévues par les réglements de l´ISSF, soit tranché définitivement par un tribunal constitué conformément au Statut et au Règlement du Tribunal Arbitral du Sport, Lausanne, à l´exclusion de tout recours à des tribunaux ordinaires. Les parties s´engagent à se conformer aux dits Statut et Règlement et à se soumettre de bonne foi à la sentence qui sera rendue et à ne pas entraver son exécution.

German:	
1.	Ich erkläre hiermit, dass mir die Bestimmungen und Strafen bekannt sind, die für offizielle Wettkämpfe der ISSF zur Bekämpfung des Dopings in Kraft sind. Ich erkläre mein Einverständnis, mich den Dopingkontrolluntersuchungen zu unterziehen, die Ergebnisse solcher Untersuchungen anzunehmen und die entsprechenden Vorschriften in ihrer jeweils gültigen Form zu jeder Zeit einzuhalten.
2.	Ich erkläre mein Einverständnis, dass jeder Streit, der zwischen mir und der ISSF entsteht und nicht freundschaftlich erledigt werden kann, und der nach Ausschöpfung der Verfahrensvorschriften, die in den ISSF Regeln vorgesehen sind, offen bleibt, endgültig durch ein Schiedsgericht entschieden werden soll, welches in Übereinstimmung mit den Statuten und Regeln des Schiedsgerichts für Sport in Lausanne (CAS) zusammengestellt wird unter Ausschluss der Anrufung ordentlicher Gerichte. Die Parteien verpflichten sich, die erwähnten Statuten und Regeln zu beachten und die Entscheidung im guten Glauben anzunehmen und ihre Durchsetzung in keiner Weise zu behindern.

Espanol:	
1.	Confirmo haber tomado conocimiento de la reglamentación y de las sanciones en vigor en las competiciones oficiales de la ISSF respecto a la lucha contra el doping. Estoy de acuerdo en someterme a las pruebas de control de doping, aceptar sus resultados y respetar el Reglamento tal como esté en vigor en cualquier momento dado.
2.	Estoy de acuerdo en que todo litigio entre mí mismo(a) y la ISSF que no pueda resolverse de forma amistosa, aún después de los procedimientos previstos por la ISSF, se decida definitivamente por un tribunal constituido de acuerdo con los Estatutos y el Reglamento del Tribunal de Arbitraje del Deporte, Lausana sin posibilidad de recurso a los tribunales ordinarios. Las partes en litigio se comprometen a respetar tales Estatutos y Reglamento, aceptar de buena fe la sentencia pronunciada y no dificultar su ejecución.

CamScanner

Article 3.12.3.3, Annex "G"

General Procedures for Organizing Committees

The general procedures for ISSF Championship Organizing Committees are found in several different ISSF documents. Organizers should begin by examining the following ISSF Rules and Regulations:

• ***ISSF General Regulations***, 3.1 – 3.14

• ***ISSF General Technical Rules***, 6.1 – 6.23, and all official ISSF documents that are referenced in the ***General Technical Rules.***

Reference must also be made to the following ISSF Special Technical Rules, as applicable for the Championship:

• ***ISSF Rifle Rules***, 7.1 - 7.8

• ***ISSF Pistol Rules***, 8.1 - 8.14

• ***ISSF Shotgun Rules***, 9.1 – 9.20

• ***ISSF Running Target Rules***, 10.1 – 10.16

• ***ISSF Target Sprint Rules,*** 11.1 – 11.21

Detailed steps to plan and prepare for a Championship are found in the following document:

• ***Guidelines for Organizing ISSF Championships***, and all official ISSF documents that are referenced in the Guidelines.

The Guidelines are updated on an annual basis so Organizers must ensure that they obtain the most recent version that is posted on the ISSF website. The ***Guidelines for Organizing ISSF Championships*** also include several Annexes or additional documents that must be used by appropriate members of the Organizing Committee.

If any Organizer has questions or requires additional Information, they are urged to contact the ISSF Event Manager at ISSF Headquarters or the ISSF Technical Delegate who was appointed for the Championship.

CamScanner

Article 3.12.3.4, Annex "W"

Application Procedures for ISSF World Championships and World Cups

The ISSF General Assembly chooses World Championship organizers in accordance with the ***ISSF General Regulations, 3.2.3***. An ISSF Member Federation that wants to organize a World Championship must submit a proposal to the Secretary General one (1) month in advance of the General Assembly where the organizing federation will be chosen. Applicants must complete an ***Application for an ISSF World Championship*** and submit it to the Secretary General with all required documentation.

The Executive Committee chooses World Cup organizers in accordance with the ***ISSF General Regulations 3.2.4***. An ISSF Member Federation that wants to organize a World Cup or World Cup Final must submit a proposal to the Secretary General not later than 31 December, three (3) years before the year in which the World Cup is to be organized. Applicants must complete an ***Application for an ISSF World Cup*** and submit it to the Secretary General.

ISSF Member Federations that submit applications for a World Championship or a World Cup must use the Application Forms printed in this Annex as a model form to ensure that all required information is submitted to the ISSF. When completing an application, applicants must provide additional explanations or details regarding their responses.

CamScanner

Application form for an ISSF World Championship

Federation Name:

Proposed Dates for Championship:
Date of last major competition in your country: Organized in (city or town):
WCH to be organized in (city or town):

Attach documentation as Annexes to confirm the following:

Support from the Government Sports Agency and/or NOC:	Annex	
Support from the National Olympic Committee:	Annex	
Statement of Respect for the ISSF Constitution:	Annex	
Statement of Invitation to all ISSF Member Federations:	Annex	
Shooting range description:	Annex	
Information regarding the proposed organization including cost of food and housing:	Annex	
Events in Programme: (World Championship events, 300m events, Junior events)	Annex	

Shooting range ready for competition:	
Shooting range remodeling plans:	
Shooting range construction plans:	

Ranges	Number of firing points / ranges	Electronic Targets yes/no	Manufacturer	Space for Spectators / number
300m Rifle				
50m Rifle/Pistol				
25m Pistol				
10m Air Rifle/Pistol				
Trap / Double Trap		n/a		
Skeet		n/a		
50m Running Target				
10m Running Target				

CamScanner

Separate Finals Range				

VENUE OWNER	☐ Government/Military _____ ☐ National or Regional Shooting Federation _____ ☐ Shooting Club _____ ☐ Private (Name of owner) _____ ☐ Other _____

Facilities for:	yes/ no	m²	Facilities for:	yes/ no	m²
ISSF President			ISSF Secretariat		
ISSF Secretary General			Jury of Appeal Room		
Tech. Delegates Offices			Jury Rooms		
Athlete Lounges (Team Rooms)			Classification Room		
EST Control Rooms			Medical Rooms		
Internet			Doping Control Rooms		
Equipment Control			Award Ceremony Area		
Changing rooms (close to Equipment Control)			Gunsmith Facilities		
Storage Rooms			Restaurant		
Commercial Displays			Toilets		
Parking Facilities			Media Center		
Preparation Area for Finals					

Number of ISSF Licensed Judges in Federation:	Class A	Class B
Rifle		
Pistol		
Shotgun		
Running Target		
Electronic Scoring Target Control		
Application submitted by:		

Signature:	Position:	Date:

CamScanner

Application form for an ISSF World Cup

The _____ hereby applies for a _____
(name of Federation) (title of event)

to be held at _____ on _____
(venue) (preferred dates)

Disciplines: ☐ Rifle/Pistol ☐ Shotgun

Organizing Committee:

Name of OC Secretary:	
Address of OC Secretary:	Phone:
	Fax:
	E-mail:

Rifle/Pistol Ranges: *Please answer the following questions for Rifle/Pistol only:*

Direction of shooting: 25m _____ 50m _____

Number of firing points available:	10m		25m		50m	
Electronic Target Manufacturer:	10m		25m		50m	

Is there a separate Finals range? ☐ Yes / ☐ No

Are Finals ranges indoor/outdoor:	10m		25m		50m	
Electronic Target Manufacturer:	10m		25m		50m	

Do all ranges comply with current ISSF Rules? ☐ Yes / ☐ No
If 'No' please specify on separate sheet

CamScanner

Shotgun Ranges: *Please answer the following questions for Shotgun only:*

Direction of shooting: ☐ Permitted shooting hours from ☐ to ☐

Number of ranges available: combined ☐ / separate ☐

TRAP ☐ DOUBLE TRAP ☐ SKEET ☐

Manufacturer of target machines: ☐

Do all ranges comply with current ISSF Rules? ☐ Yes / ☐ No

If 'No' please specify on separate sheet

VENUE OWNER	☐ Government/Military _____ ☐ National or Regional Shooting Federation _____ ☐ Shooting Club _____ ☐ Private (Name of owner) _____ ☐ Other _____

Previous Events:

Please specify the last ISSF World Cup or similar event that your Federation has hosted at this venue:

Event: ☐ Date: ☐

Travel and Accommodation:

Distance from ranges to nearest airport with international connections: ☐ km

Name of airport: ☐

Approximate distance from ranges to nominated official hotels: ☐ km

Approximate travel time: ☐ minutes

CamScanner

Hotel ratings and approximate daily costs (in Euros):

5★	Single €	Double €	4★	Single €	Double €	3★	Single €	Double €	Other	Single €	Double €

Internet:

What kind of internet connections are available at the venue for

Upload:		Download:	

Regulations:

Please give an explanation below of any National Laws or Local Regulations of which the ISSF and its National Federations should be informed, e.g. 'Importation of firearms and ammunition':

Submitted:

Signature	Title/Position	Date

CamScanner

Article 3.12.3.5, Annex “CE”

ISSF Code of Ethics

PREAMBLE

In accordance with the ISSF Constitution, the objectives of the ISSF are to promote and encourage the development of the shooting sport throughout the world, to provide drug-free sport and to promote and encourage the development of international relations.

The purpose of this Code is to guarantee that the objectives of the ISSF will be executed in a fair manner, without improper interference, and to sanction incidents that damage the image of ISSF activities or bring them into disrepute.

ISSF members, continental organizations, teams, officials and athletes shall participate in ISSF Championships and activities in accordance with the standards of ethics, fair play and sportsmanship established by the ISSF Statutes, Rules and Regulations and by this Code. This Code provides basic standards for fair play and moral behaviour and procedures for judging and sanctioning violations of those standards.

With the following regulations the ISSF adopts its own code of ethics based on the principles and rules of the IOC Code of Ethics.

Furthermore, acknowledging the danger to sports integrity from the manipulation of sports competitions, ISSF restates its commitment to safeguarding the integrity of sport, including the protection of clean athletes and competitions as stated in the Olympic Agenda 2020. Therefore, ISSF with these regulations also implements the new IOC Olympic Movement Code on the Prevention of the Manipulation of Competitions. The Definitions used in version 2016 of such IOC Code also apply to the following rules. These Ethics Rules had been ammended by decision of the ISSF Executive Committee in its meeting on February 21, 2017.

For enforcement of this Code, the ISSF will establish an Ethics Committee.

1 SCOPE OF APPLICATION

1.1 SCOPE OF APPLICABILITY

This Code shall apply to conduct that damages the integrity and reputation of sports and in particular to illegal, immoral and unethical behaviour.

1.2 PERSONS COVERED

This Code shall apply to all officials and employees of the ISSF, ISSF member federations, the Continental Shooting Sport Confederations, as well as to athletes, coaches and other participants in ISSF activities.

1.3 APPLICABILITY IN TIME

This Code shall apply to conduct whenever it occurred including before the passing of the rules contained in this Code.

However, no individual shall be sanctioned for breaching this Code on account of an act or omission which would not have contravened the Code applicable at the time the breach was committed.

CamScanner

Neither may they be subjected to a sanction greater than the maximum sanction applicable at the time the breach occurred.

This shall, however, not prevent the Ethics Committee from considering the conduct in question and drawing any conclusions from it that are appropriate.

1.4 SCOPE OF THE CODE, CUSTOM, DOCTRINE AND JURISPRUDENCE

During all its operations, the Ethics Committee may draw on precedents and principles already established by sports doctrine and jurisprudence.

2 RULES OF CONDUCT

2.1 DUTIES

2.1.1 General Rules of conduct

Persons bound by this Code are expected to be aware of the importance of their duties and associated obligations and responsibilities.

Persons bound by this Code are obliged to respect all applicable laws and regulations, as well as ISSF Statutes, Rules and Regulations, and decisions taken by the competent ISSF bodies to the extent applicable to them.

Persons bound by this Code shall behave in a dignified manner and act with complete credibility and integrity. They shall respect universal fundamental ethical principles that include:

a) Respect for the Olympic spirit, which requires mutual understanding with a spirit of friendship, solidarity and fair play;

b) Respect for principles of universality, political neutrality and autonomy of the Olympic Movement;

c) Respect for international conventions on protecting human rights insofar as they apply to the Olympic Games and ISSF Championship activities and which ensure in particular:

• respect for human dignity;

• rejection of discrimination of any kind on whatever grounds, be it race, color, sex, sexual orientation, language, religion, political or other opinion, national or social origin, property, birth or other status;

• rejection of all forms of harassment, be it physical, professional or sexual, and any physical or mental injuries;

d) ensuring the participants' conditions of safety, well-being and medical care favorable to their physical and mental equilibrium.

Persons bound by this Code may not abuse their position in any way, especially to take advantage of their position for personal or private aims or gains.

2.1.2 Duty of fair behavior / sportsmanlike behaviour

Persons bound by this Code are expected to behave in a fair way and shall in particular refrain from any form of cheating including, but not limited to doping, manipulation of equipment or scores to give an advantage to an athlete or to a team, falsification or alteration of documents indicating false age, nationality,

CamScanner

gender or other information, with the purpose of obtaining unfair advantage for an official, an athlete or a team.

2.1.3 Loyalty

Persons bound by this Code have a duty of loyalty to the ISSF and its members. Therefore, they shall in particular refrain from any act of indiscretion, insubordination or partiality.

2.1.4 Integrity of competitions

Persons bound by this Code shall not take part in, either directly or indirectly, or otherwise being associated with betting, gambling, lotteries and similar events or transactions connected with shooting competitions.

2.1.5 Other ethical offences

Other ethical offences, including the improper or illegal manipulation of equipment testing, ammunition testing, scoring decisions or competition results, illegal access to systems and data, committed by persons bound by this Code may be considered independent of any action taken or not taken by ISSF Competition Juries.

2.1.6 Forgery and falsification

Persons bound by this Code are forbidden from forging a document, falsifying an authentic document or using a forged or falsified document.

2.1.7 Duty of disclosure, cooperation and reporting

Persons bound by this Code shall immediately report any potential breach of this Code to the ISSF Secretary General or send an email to ethics@issf-sports.org.

At the request of the Ethics Committee, persons bound by this Code are obliged to contribute to clarifying the facts of the case or clarifying possible breaches and provide the evidence requested for inspection.

2.2 UNDUE ADVANTAGE

2.2.1 Conflicts of interest

When performing an activity for the ISSF, or before being elected or appointed, persons bound by this Code shall disclose any potential conflicts of interest that could be linked with their prospective activities.

Conflicts of interest arise if persons bound by this Code have, or appear to have, private or personal interests that detract from their ability to perform their duties with integrity and in an independent manner. Private or personal interests include gaining any possible advantage for the persons bound by this Code for themselves, members of their family, relatives, friends and acquaintances.

Any such conflict shall be immediately disclosed and notified to the body or organization for which the person bound by this Code performs his duties.

If an objection is made concerning an existing or potential conflict of interest of a person bound by this Code, it shall be reported immediately to the organization for which the person bound by this Code performs his duties for appropriate measures.

CamScanner

2.3 OFFERING AND ACCEPTING GIFTS AND OTHER BENEFITS

Persons bound by this Code may only offer or accept gifts or other benefits to and from persons within or outside ISSF, or in conjunction with intermediaries or related parties as defined in this Code, which

a) have symbolic value;

b) are not given to influence a decision, voting behaviour or any other act that is related to their official activities or that falls within their discretion;

c) do not create any undue pecuniary or other advantage; and

d) do not create a conflict of interest.

Any gifts or other benefits not meeting all of these criteria are prohibited. Requests for guidance should be addressed to the Secretary General.

2.4 BRIBERY AND CORRUPTION

Persons bound by this Code must not offer, promise, give or accept any undue pecuniary or other advantage for the execution or omission of an act that is related to their official activities. Such acts are prohibited, regardless of whether carried out directly or indirectly through, or in conjunction with, intermediaries or related parties as defined in this Code. Any such offer must be reported in writing to the Secretary General and any failure to do so shall be subject to sanctions in accordance with this Code.

Persons bound by this Code are prohibited from misappropriating ISSF assets, regardless of whether carried out directly or indirectly through, or in conjunction with, intermediaries or related parties, as defined in this Code.

2.5 NON-DISCRIMINATION

Persons bound by this Code may not offend the dignity or integrity of a country, private person or group of people through contemptuous, discriminatory or denigrating words or actions on account of race, skin color, ethnic, national or social origin, gender, language, religion, political opinion or any other opinion, wealth, birth or any other status, sexual orientation or for any other reason.

2.6 PROTECTION OF PHYSICAL AND MENTAL INTEGRITY

Persons bound by this Code shall respect the integrity of others involved. They shall ensure that the personal rights of every individual whom they contact and who is affected by their actions is protected, respected and safeguarded.

3 PREVENTION OF MANIPULATION

The following conduct as defined in this Article constitutes a violation of this Code:

3.1 BETTING

Betting in relation either:

a) to a Competition in which the Participant is directly participating; or

b) to the Participant's sport; or

c) to any event of a multisport Comp[illegible] which he/she is a participant.

CamScanner

3.2 MANIPULATION OF SPORTS COMPETITIONS

An intentional arrangement, act or omission aimed at an improper alteration of the result or the course of a Competition in order to remove all or part of the unpredictable nature of the Competition with a view to obtaining an undue Benefit for oneself or for others.

3.3 CORRUPT CONDUCT

Providing, requesting, receiving, seeking, or accepting a Benefit related to the manipulation of a Competition or any other form of corruption.

3.4 INSIDE INFORMATION

3.4.1 Using Inside Information for the purposes of Betting, any form of manipulation of Competitions or any other corrupt purposes whether by the Participant or via another person and/or entity.

3.4.2 Disclosing Inside Information to any person and/or entity, with or without Benefit, where the Participant knew or should have known that such disclosure might lead to the information being used for the purposes of Betting, any form of manipulation of competitions or any other corrupt purposes.

3.4.3 Giving and/or receiving a Benefit for the provision of Inside Information regardless of whether any Inside Information is actually provided.

3.5 FAILURE TO REPORT

3.5.1 Failing to report to ISSF or a relevant disclosure/reporting mechanism or authority, at the first available opportunity, full details of any approaches or invitations received by the Participant to engage in conduct or incidents that could amount to a violation of this Code.

3.5.2 Failing to report to ISSF or a relevant disclosure/reporting mechanism or authority, at the first available opportunity, full details of any incident, fact or matter that comes to the attention of the Participant (or of which they ought to have been reasonably aware) including approaches or invitations that have been received by another Participant to engage in conduct that could amount to a violation of this Code.

3.6 FAILURE TO COOPERATE

3.6.1 Failing to cooperate with any investigation carried out by ISSF in relation to a possible breach of this Code, including, without limitation, failing to provide accurately, completely and without undue delay any information and/or documentation and/or access or assistance requested by ISSF as part of such investigation.

3.6.2 Obstructing or delaying any investigation that may be carried out by ISSF in relation to a possible violation of this Code, including without limitation concealing, tampering with or destroying any documentation or other information that may be relevant to the investigation.

CamScanner

3.7 APPLICATION OF ARTICLES 3.1 to 3.6

3.7.1 For the determination of whether a violation has been committed, the following are not relevant:

a) Whether or not the Participant is participating in the Competition concerned;

b) The outcome of the Competition on which the Bet was made or intended to be made;

c) Whether or not any Benefit or other consideration was actually given or received;

d) The nature or outcome of the Bet;

e) Whether or not the Participant's effort or performance in the Competition concerned were (or could be expected to be) affected by the acts or omission in question;

f) Whether or not the result of the Competition concerned was (or could be expected to be) affected by the acts or omission in question;

g) Whether or not the manipulation included a violation of any ISSF rule;

3.7.2 Any form of aid, abetment or attempt by a Participant that could culminate in a violation of this Code shall be treated as if a violation had been committed, whether or not such an act in fact resulted in a violation and/or whether that violation was committed deliberately or negligently.

4 DISCIPLINARY MEASURES, SANCTIONS

4.1 GENERAL

Breaches of this Code or any other ISSF Statutes, Rules and Regulations by persons bound by this Code are punishable by one or more of the following sanctions:

a) warning;

b) fine;

c) return of awards;

d) disqualification;

e) suspension;

f) expulsion;

g) ban on entering a competition or a venue;

h) ban on taking part in any shooting-related activity.

The Ethics Committee may decide that the notification of a case be made to the appropriate law enforcement authorities.

4.2 INVESTIGATIONS

The Participant who is alleged to have committed a violation of this Code must be informed of the alleged violations that have been committed, details of the alleged acts and/or omissions, and the range of possible sanctions.

CamScanner

4.3 BURDEN AND STANDARD OF PROOF

The ISSF shall have the burden of establishing that a violation has been committed. The standard of proof in all matters under this Code shall be the balance of probabilities, a standard that implies that on the preponderance of the evidence it is more likely than not that a breach of this Code has occurred.

4.4 CONFIDENTIALITY

The principle of confidentiality must be strictly respected by the ISSF during all the procedure; information should only be exchanged with entities on a need to know basis. Confidentiality must also be strictly respected by any person concerned by the procedure until there is public disclosure of the case.

4.5 DETERMINATION OF THE SANCTION

The sanction may be imposed by taking into account all relevant factors in the case, including the offender's assistance and cooperation, the motive, the circumstances and the degree of the offender's guilt.

The Ethics Committee shall decide the scope and duration of any sanction.

Sanctions may be limited to a geographical area or to one or more specific categories such as a competition.

Unless otherwise specified, the sanction may be increased as deemed appropriate if a breach has been repeated.

Where more than one breach has been committed, the sanction shall be based on the most serious breach, and increased as appropriate depending on the specific circumstances.

5 LIMITATION PERIOD

As a general rule, breaches of the provisions of this Code may no longer be prosecuted after a lapse of ten years.

The limitation period, when applicable, shall be prolonged if proceedings are opened and/or suspended.

6 PROCEDURES

6.1 ETHICS COMMITTEE

The Ethics Committee consists of a Chairman and two additional members. The members of the Ethics Committee are appointed by the Executive Committee in case a complaint according to 6.2 below has been filed.

The members of the Ethics Committee must be independent and may not hold a position in the ISSF or any ISSF member federation.

The Ethics Committee is to be composed in such a way that the members, together, have the knowledge, abilities and specialist experience that is necessary for the due completion of their tasks. The Chairman and at least one other member shall be qualified to practise law.

Members of the Ethics Committee must disclose to the Chairman or the ISSF Secretary General any situation or fact that may establish a conflict of interest

CamScanner

between themselves and the case under investigation. Such disclosure must be made immediately after the inquiry is opened or immediately after the situation or fact in question arises.

Any person being subject to investigations of a potential breach of this Code, or declaring a conflict of interest, may not be part of the Ethics Committee. In such cases, or if a member of the Ethics Committee is unable to act, the Executive Commitee must appoint a person acting as a replacement.

6.2 RULES FOR PROCEDURES

Any complaints, charges or guidance relating to a breach of ethical principles and rules should be addressedin writing to the Secretary General or to ethics@ issf- sports.org. The Secretary General shall inform the Chairman in order to summon the Ethics Committee.

The Ethics Committee shall decide whether to conduct an inquiry or to dismiss the complaint.

When conducting an inquiry regarding a complaint or charges, the Ethics Committee may:

• Request written information or documents from the parties concerned;

• Hear the parties concerned, with or without the presence of legal counsel, as determined by the Ethics Committee;

• Decide to hear witnesses as determined by the Ethics Committee or at the request of the parties concerned;

• Conduct investigations in the field by designating one (1) or more of its members or another person to represent the Committee;

• Designate one (1) or more experts to assist the Ethics Committee in its inquiry.

In the absence of a consensus, decisions of the Ethics Committee shall be taken by majority of members present.

7 APPEALS

Decisions by the Ethics Committee may be appealed to the Court of Arbitration for Sport in Lausanne, Switzerland, (“CAS”) which will resolve the dispute definitively in accordance with the Code of sports-related arbitration. The time limit for appeal is twenty-one days after the reception of the decision concerning the appeal.

8 MUTUAL RECOGNITION

Subject to the right of appeal, any decision in compliance with this Code by an International Sporting Organisation shall be recognised and respected by the ISSF.

This ISSF Code of Ehtics was approved by the ISSF Executive Committee in its meeting on March 1, 2016. This edition includes ammendments and corrections approved by the ISSF Executive Committee on February 21, 2017.

CamScanner

Article 3.12.3.6, Annex "R"

Procedures for Verification of World Records

World Records must be established in accordance with the ISSF General Regulations 3.10, and applicable rules for the shooting discipline.

World Records become valid when competition results are final and the ISSF Technical Delegate or ISSF Secretary General confirms that the competition was conducted according to ***ISSF Rules and Regulations*** and that a valid World Record was equaled or exceeded in accordance with these requirements.

The official list of valid World Records is published by ISSF Headquarters on the ISSF website. World Record certificates are issued by the ISSF Secretary General.

Technical Delegates should use this form to report World Records for verification by the Technical Committee in accordance with the ***ISSF General Regulations***, 3.10.4

Report of World Records					
Name of ISSF Championship					
Men ☐	Women ☐		Men Junior ☐	Women Junior ☐	
Athlete/Team Members		**Nation**	**Event**	**WR/FWR/ EWR/EFWR WRJ/EWRJ/**	**Score**
Confirmation by Technical Delegate					
This verifies that this record(s) was established in an ISSF Championship 1) that was conducted according to ISSF Rules and Regulations, 2) that ISSF participation requirements (3.9) were fulfilled and that ISSF Anti-Doping were followed:					
Date:			Signature:		
Record(s) Verified by the Technical Committee					
Date:			Signature:		

CamScanner

Article 3.12.3.7, Annex "P"

Rules for Filing and Deciding Protests

The ISSF establishes rules for and conducts Championships in which its Member Federations may enter individual athletes or teams. Athletes or team participating in ISSF Championships have a right to protest when competitions are not conducted according to ISSF Rules and Regulations. ISSF rules for filing and deciding protests are:

1. Protests filed at ISSF Championships must be decided according to ISSF Rules and Regulations;
2. Competition Juries (3.5.3) are responsible for receiving and deciding all protests;
3. The Jury of Appeal (3.5.3.7) is responsible for making final decisions on all appeals against protest decisions by Competition Juries. Decisions by the Jury of Appeal may not be appealed;
4. During Finals round competitions, the Competition Jury shall supervise the Finals and make any decisions required by ISSF Rules and Regulations that do not involve protests. If a protest is made during a Final, a Finals Protest Jury is responsible for making an immediate decision regarding the protest. Finals Jury decisions may not be appealed;
5. For Finals round competitions where protests must be decided immediately, a combined Finals Protest Jury consisting of two (2) members of the Competition Jury plus one (1) member of the Jury of Appeal must be designated by the Technical Delegate and the appropriate Jury Chairman.
6. In a Finals round no score protest is permitted except for a failure to indicate a shot. In such cases one (1) member of the Classification Jury must also be included;
7. Rules and forms for filing protests or appeals are specified in the ***General Technical Rules, 6.16 and 9.17***. ISSF protest rules provide for verbal protests that can be submitted and decided on the ranges immediately, for written protests to be decided by the appropriate Jury and for appeals of Jury decisions to be decided by a Jury of Appeal. The rules also provide for scoring protests to be decided by the RTS Jury with decisions on scoring protests not subject to appeal. The protest rules further provide that in Finals round competitions, the Finals Jury shall make immediate decisions on any protests and that such decisions may not be appealed; and
8. In the case of protests involving conflicts between the ***ISSF Constitution, ISSF General Regulations*** or Technical Rules, the ***ISSF Constitution*** shall take precedence over the ***ISSF General Regulations*** or Technical Rules and the ***ISSF General Regulations*** shall take precedence over the Technical Rules. In conflicts involving IOC Rules, the IOC Rules shall prevail.

CamScanner

Article 3.12.3.8, Annex "TA"

Guidelines for Training Academy

ISSF Training Academy Courses

1 BACKGROUND

1.1 Special ISSF training courses for coaches were approved by the Executive Committee in 1992 and ammended in 2011.

1.2 These diploma courses are designed for national coaches from Member Federations to achieve an international coaching qualification.

1.3 Coaching Diplomas are of three categories: "A," "B" and "C."

1.4 It is necessary first to attend a "C" course. Thereafter, coaches having achieved a Diploma can apply to attend a "B" course, and if successful an "A" Course.

1.5 The ISSF Training Academy also offers a regional or national coaching course "D," which is held in the local language of the region in which the course is hosted. Material and certificates will be provided by the ISSF Traing Academy.

1.6 A course fee is payable by each student attending a Coaching Diploma course. This covers the cost of running the course and any associated accommodation, meals and local transportation.

2 COACHING DIPLOMA COURSES

2.1 Official recognition of Training Academy Courses will be decided by the ISSF Executive Committee.

2.2 Instructors for these courses are chosen from those having specialist knowledge of the various topics in the course programme.

2.3 Assistant Instructors, with similar qualifications, also may be designated depending upon the number of students attending.

2.4 The recommended course programme lasts one (1) week.

2.5 The knowledge of the students is assessed by various tests at the different levels. The details are contained in the Training Academy Guidelines.

2.6 The results are reported to the ISSF Executive Committee annually.

3 APPEALS

3.1 Any student may appeal in writing against the decision that he has failed a course. The appeal will be considered by the ISSF Executive Committee.

CamScanner

Article 3.12.3.9, Annex "J":

Guidelines for Judges Licences

1 GENERAL 74

2 ACQUISITION OF A LICENCE 75

3 VALIDITY AND EXTENSION OF THE LICENCE 75

4 EXPIRATION OF A LICENCE 76

5 UPGRADING 78

6 SPECIAL ADMINISTRATIVE PROCESS FOR THE ISSUANCE OF JUDGES' LICENCES 79

7 ASSIGNMENT OF JUDGES 79

8 ELECTRONIC SCORING TARGET COURSES 80

9 INSTRUCTORS' LICENCE 81

10 APPLICATION FORMS FOR LICENCES 82

SPECIAL NOTE:

In the context of this Annex, the word "Judge" refers to an accredited ISSF Judge's Licence holder. The word "Jury" refers to those Licenced judges who are appointed to Jury duties at specified Championships.

CamScanner

1 GENERAL

1.1 For the achievement of its purposes the International Shooting Sport Federation (ISSF), Licences judges to supervise shooting competitions and to ensure the fair and equal treatment of all competitors (see 1.1.4 ISSF Constitution). Judges must be experienced and fully conversant with the current versions of the ISSF Rules and Regulations plus the relevant Technical Rules for the Shooting discipline concerned in order to Advise, Supervise and Assist if necessary.

1.2 The ISSF issues judges' Licences as confirmation of qualification.

1.3 Judges' Licences are divided into two (2) categories.

1.3.1 Category "A" authorizes the holder to act as an official Jury member at all shooting competitions, for which the Licence is valid with respect to the disciplines included, including the Olympic Games and World Championships.

1.3.2 Category "B" Licence authorizes the holder to act as an official Jury member in all shooting competitions, for which the Licence is valid with respect to the disciplines included, except the Olympic Games and the World Championships.

1.4 The ISSF issues judges' Licences for the following disciplines:

1.4.1 Rifle shooting (1)

1.4.2 Pistol shooting (2)

1.4.3 Shotgun shooting (3)

1.4.4 Running Target shooting (4)

1.4.5 Target Control (5)

1.4.6 Electronic Scoring Target Control (6)

1.4.7 Target Sprint (7)

1.4.8 The ISSF can issue judges' Licences for one (1) or more discipline(s), but only following successful completion of official ISSF courses in each of the disciplines. Normally, No.5 (Target Control) is combined with the shooting disciplines No.1 (Rifle), No.2 (Pistol), No.4 (Running Target), and No.7 (Target Sprint). However, No.6 (Electronic Scoring Target Control) is only issued after successful completion of an official ISSF course on that specific subject.

1.5 The ISSF Headquarters and the Chairman of the Judges Committee maintain a list of all the Licence holders.

1.6 Licence holders may only act as Jury Members for the Olympic Games and the World Championships if they have been designated by the Executive Committee of the ISSF. For World Cups Jury Members will be nominated by the ISSF Secretary General and the Chairman of the ISSF Judges Committee, and approved by the Executive Committee. For Continental and Regional Games and Championships they must be designated by the Continental or Regional Confederations, who in turn must forward this designation to the ISSF for ratification and authorization. Continental and Regional designations must have full endorsement prior to the event to ensure official recognition has been granted.

CamScanner

2 ACQUISITION OF A LICENCE.

2.1 The applicant must have the necessary capability and experience as a judge, in particular with a clear understanding and expression of the English language.

2.2 ISSF Judges' Licences are not granted to active athletes who still participate in competitions where world records may be established. If the holder of a judges' Licence wishes to participate as an athlete, he must return the Licence to the ISSF Headquarters for cancellation. He may subsequently apply for a new Licence.

2.3 For the acquisition of an ISSF Judges' Licence, preparatory instruction and training is necessary. The applicants should possess a National judges' Licence of the highest level issued by their National Federation, or must have equivalent experience as a national judge and as a range official. For acquisition of a Judges' Licence in the shotgun discipline, applicants must first be in possession of a valid Shotgun Referees Licence.

2.4 Applicants must also have achieved the pass-standard in the General Aspects and the Shooting Discipline Parts of an official ISSF Judges' course within the previous two (2) years.

2.5 An applicant's National Federation must sign the completed official ISSF Judges' application form (see form at end of Guidelines) to confirm the contents and support the application. The National Federation must then send it to the ISSF Headquarters.

2.6 Applications should be submitted as soon as possible, but no later than 31 December each year for Licences to be issued in the following year. In order that applicants are not disadvantaged by any time considerations, once applications are received by ISSF Headquarters, the Chairman of the Judges' Committee will endeavour to authorize the issue of Licences or upgrades as soon as possible. This does not negate the requirement for the Judges' Committee to approve and confirm the granting of these Licences at their annual meeting.

2.7 The ISSF Judges Committee will evaluate and approve, where appropriate or postpone applications during its annual meeting which will usually be held towards the end of January each year.

2.8 After approval, the ISSF Headquarters will issue the Licences. To be valid they must be signed by the ISSF Secretary General and the Chairman of the ISSF Judges' Committee.

2.9 These Licences are sent to the National Federations for delivery to the Licence holders.

2.10 A fee of Euro 50.00 must be paid for a new Licence.

2.11 Approval of initial applications will result in the issue of a "B" category Licence. Category "A" Licences are only issued following further experience with assessment before upgrading.

3 VALIDITY AND EXTENSION OF THE LICENCE.

3.1 All ISSF Judges' Licences are issued for a period of five (5) years.

3.2 After expiration of this period, the Licence can be renewed.

CamScanner

3.3 The National Federation must submit all requests for renewal to the ISSF Headquarters accompanied by a completed Renewal Form (see form at end of Guidelines).

3.4 The National Federation must confirm that the applicant has obtained experience as a Jury Member in international, regional or national level competitions during the last five (5) year period.

3.5 The current Licence should not be returned when applying for a renewal, though it will cease to be valid after the expiry date. Applications for renewal should be submitted at least three (3) months before expiry.

3.6 The Chairman of the Judges' Committee in co-operation with the ISSF Headquarters will deal with all renewals. Renewed Licences will be returned to the National Federation.

3.7 A fee of Euro 25.00 will be charged for each renewal.

4 EXPIRATION OF A LICENCE.

4.1 When an ISSF Judge's Licence expires after five (5) years, Licence holders will be taken off the ISSF list if not renewed by application within one (1) year. In such a case any future Licence must be applied for in accordance with the acquisition of a Licence, including attendance at course(s). Licences renewed late within the one (1) year will only be valid for five (5) years from the previous expiry date.

4.2 The Licence holders' National Federation, at any time, has the right to apply for cancellation of an ISSF Judge's Licence. The Licence holder may be taken off the list, in such a case the Licence should be returned to the ISSF.

4.3 A judge's Licence may be cancelled if a holder does not fulfil his duties as a judge or harms the interest or reputation of the ISSF. The holder will be taken off the ISSF list and the Licence must be returned to the ISSF. All ISSF Judges' Licences remain the property of the ISSF.

4.4 **Judges' Courses.**

4.5 Only courses that have been approved and recognized by the ISSF will be considered as official training courses for judges. The location and dates of such courses are to be agreed with the Secretary General and Chairman of the Judges' Committee. Once agreed, the Chairman of the Judges' Committee and the Secretary General will appoint a qualified ISSF Instructor, from the approved list of ISSF Instructor licence holders, to deliver each course. After authorisation by the ISSF Judges' Committee, the ISSF will publish the annual courses programme by January of that year. Applications for recognition must be submitted to the ISSF Headquarters using the form "Application for Judges Courses" (available on ISSF web site). The application must be sent to ISSF at least 3 months before the date of the intended course. All applications and subsequent publication of courses must include the following details:

4.5.1 Where the course will be held;

4.5.2 The dates of the course;

4.5.3 The name(s) of the shooting disciplines that will be covered;

4.5.4 The name(s) of the ISSF Instructor. The name of the course coordinator and, if different, of the person who is to conduct the instruction on the General Aspects of the Rules;

CamScanner

4.5.5 What expenses will be met by the National Organizer; English language is mandatory. The ISSF Licence will not be granted if obtained with any other language.

4.5.6 From which National Federation(s) the Participants will come; Normally, applications will be considered when received from other National Federations within the same Continent, but cannot be guaranteed.

4.6 The basis for ISSF Judges' courses is the "ISSF Training Guidelines". A copy of this document will be issued by the ISSF to the course coordinator of every approved course. The objective is to ensure that applicants for ISSF Licences have a proper understanding of the Rules, and their application, in respect of the disciplines for which they seek to be Licenced; also, to ensure applicants have a proper understanding of the Constitution, General Regulations, Terms of Reference, Eligibility and Anti-Doping Regulations, etc applicable to all disciplines. Separately, applicants for Licences must possess practical experience gained from officials' duties within their National Federation. Normally, applicants for ISSF Judges' courses should already possess the highest National Licence as a range official; where nations do not have a national Licence system the applicants must possess equivalent practical experience.

4.6.1 Every part of the course should be opened with the explanation of the purpose and the content of the course, followed by the duties and decision making processes required to make a good judge.

4.6.2 During the course the ISSF General Regulations and Constitution of the ISSF, etc… must be covered and a test conducted.

4.6.3 The "Rifle" discipline must also include 50m and 10m Pistol shooting.

4.6.4 If a separate course is held for 25m Pistol shooting, 10m and 50m Pistol shooting must also be included.

4.6.5 Shotgun, Running Target, Target Sprint and Electronic Scoring Target disciplines are treated separately.

4.7 The name of the instructor(s) must be submitted to the ISSF and confirmed. The Organizer can propose instructors to the ISSF for approval, or can request that suitable instructors be provided.

4.7.1 When there is only one (1) instructor, the different disciplines must be dealt with in succession. This must be done according to a training schedule so that the participants can become familiar with the content of a course and can make arrangements for participating in the different sections.

4.7.2 If there are instructors for the various disciplines the opening of the course, and lectures on the Constitution and the General Regulations, should be given to everyone together. The participants can then separate for the individual disciplines.

4.7.3 The organizer must pay the costs for travelling, accommodation, meals and local transportation for the instructor(s).

4.8 Courses should last a minimum of three (3) days and this must be extended if more than one discipline is to be treated in succession.

4.9 The organizer is responsible for providing a training room with adequate facilities for efficient instruction, and for the comfort of those attending.

4.10 A maximum of 15 participants are permitted per instructor.

CamScanner

4.10.1 The participants should possess a good background of practical experience as officials before attending a course. Participants with little experience must obtain practical experience under the guidance of an experienced judge in a series of national competitions before applying for an ISSF Judges' Licence. They must speak and understand English.

4.10.2 The organizer should publish details of the course as early as possible. The announcement should include all details about dates, times, accommodation, meals, local transportation, costs and any further important information.

4.10.3 Every participant must be given a registration form to be filled in with his name, address and date of birth. The participant must further indicate his experience and any special knowledge he has acquired during competitions in which he acted as an official, and the qualifications obtained in his National Federation.

4.10.4 Only participants entered by a National Federation will be accepted. Inexperienced people should not be allowed to participate.

4.11 Participants who complete the course satisfactorily, including knowledge of the General Aspects will be issued with an ISSF Diploma. ISSF certificates of attendance will not be issued, but organizers are encouraged to provide host Federation certificates of attendance for those not achieving the Diploma standard.

4.12 The ISSF Diploma does not guarantee the issue of an ISSF Licence; it only certifies the satisfactory completion of the official course.

4.13 At the end of the course the instructor must write and submit a short report, using the form "Report Official ISSF Judges Course" with a list of those attending and those completing the course to the standard required for an ISSF Licence (i.e. those having received a Diploma), stating for which disciplines they passed. Where possible the report should indicate whether the individuals already possess sufficient practical experience, or whether further practical experience appears appropriate before an ISSF Licence is granted. The report must be sent as soon as possible to the ISSF Headquarters for the attention of the ISSF Secretary General and the Chairman of the ISSF Judges Committee.

4.14 Official recognition of judges' courses will be decided by the ISSF Secretary General and the Chairman of the ISSF Judges Committee.

4.15 National Shooting Federations are encouraged to run courses for national judges' Licences, following the material provided for official ISSF courses.

4.16 National Federations not having suitably qualified ISSF Licence holders to conduct courses for National judges' Licences are also encouraged to request assistance from the ISSF Secretary General or the Chairman of the ISSF Judges Committee.

5 UPGRADING.

5.1 The basis for upgrading of a "B" judges' Licence to an "A" judges' Licence is the experience acquired as the judge over a number of years:

5.1.1 A minimum period of four (4) years recent experience is required as an active "B" Licence holder ; and

5.1.2 The applicant must have officiated in at least five (5) international competitions, which have a minimum of five (5) participating nations, at least three (3) must be ISSF or WSPS Championships. For at least two (2) appointments

CamScanner

the applicant must have been a Jury Member, but if not more, the other three (3) appointments must have been as a Chief Range Officer, Chief Referee, Chief of RTS or Chief of Equipment Control. An upgrading based only on the required period of time, but on inadequate further experience at championships, will not be granted; and

5.1.3 For Rifle, Pistol and Running Target disciplines “A” Licence upgrades, the applicant must be in posession of a valid ISSF EST Licence.

5.1.4 They must have passed an ISSF Judge’s course held in English language. They should demonstrate that they have extensive experience in serving on competition juries (ISSF or WSPS).

5.2 Accordingly, Applications for upgrading should be made to the ISSF Headquarters. When an upgrading is approved by the Judges committee, the ISSF Headquarters will issue a new ISSF Licence and this will be sent to the National Federation in the same way as for other Licence issues.

5.3 A fee of Euro 25.00 is charged for an upgrading.

5.4 Additional disciplines will only be added to an existing Licence (“A” or “B”) after the recent satisfactory completion of an official ISSF course for that discipline. Applications will be dealt with in the same way as applications for new Licences (as opposed to renewals) by the ISSF Judges Committee at its annual meeting. Those approved will receive new Licences. Where an “A” Licence is already held, the additional discipline will be added at that level.

6 SPECIAL ADMINISTRATIVE PROCESS FOR THE ISSUANCE OF JUDGES’ LICENCES

6.1 In exceptional cases an ISSF Judge’s Licence can be issued or upgraded when it is necessary to ensure there are sufficient qualified personnel at events where world records may be established. For example, when a change of venue is necessary, or when any change of a previously assigned judge is necessary.

6.2 The National Federation must submit an application.

6.3 The applications will be considered and decided by the ISSF Secretary General together with the Chairman of the ISSF Judges Committee.

6.4 Licences issued in this way will be included in the list of Licence holders. At the next meeting of the ISSF Judges Committee the Chairman must inform the Committee of any Licences granted in this way.

6.5 Licences issued in this way must only be given to well qualified individuals. The usual standards must be met; only the administrative process is changed.

7 ASSIGNMENT OF JUDGES

7.1 The nomination and designation of the Jury Members is made according to the Constitution of the ISSF. It is recommended and all appointed Jury members are encouraged to take out their own individual travel and medical insurance prior to deploying on an assignment, this is in addition to any ISSF insurance.

7.1.1 The Secretary General and the Chairman of the Judges Committee of the ISSF will nominate to the Executive Committee the required number of Jury Members and substitutes for World Championships, Olympic Games and for World Cups and Grand Prix in accordance with the Guidelines. The Executive

CamScanner

Committee designates the Juries for the World Championships and Olympic Games and approves the list for the World Cups and Grand Prix.

7.1.2 The Continental and Regional Confederations recognized by the ISSF should nominate and designate the Jury Members for their Championships and Games. Where Olympic quota places are distributed, these designations must be endorsed and ratified by the ISSF prior to the start of the event. Only with such ISSF authorization will jury appointments be granted official recognition and status.

7.1.3 The Organizing Committee, or the Organizing Federation, is responsible for the designation of Jury Members for other international championships and national championships held under the ISSF Rules.

7.2 All Jury Members must hold the applicable current ISSF Judges' Licence with EST Licence for all competitions where world records may be established. At all other championships held under the ISSF Rules, the Jury Members should hold valid ISSF Judges' Licences and EST Licence.

7.3 In championships where world records may be established, Team Leaders, Officials, Coaches and Athletes must not be members of a Jury. If possible one (1) Member, but not usually the Chairman, must be from the National Federation organizing the championships. These host nation judges must be approved by the ISSF.

7.4 In all other championships, team officials should not be members of a Jury.

7.5 It is desirable that senior officials participating in the organizing of major competitions should possess an appropriate ISSF Licence. Particular tasks and duties for which ISSF Licences should be held are: Chief Range Officer, RTS Chief, Chief Referee, Chief of Equipment Control.

7.6 Range Officers, RTS Officers, Referees and Equipment Control Officers should also be encouraged to undertake official training with a view to obtaining ISSF Licences.

7.7 Competition Officials designated by the Organizing Committee must not be members of any Juries at the same championships.

8 ELECTRONIC SCORING TARGET COURSES

8.1 Background

8.1.1 Special courses for Electronic Scoring Target (EST) Control Licences were approved by the Executive Committee in 1998. These courses provide education about the underlying principles involved, and the procedure for dealing with score-protests and with scoring problems that may be encountered.

8.1.2 These courses are designed for holders of ISSF Judges' Licences in the shooting disciplines of Rifle, Pistol and Running Target as the scoring and ranking rules for these disciplines must be known already as well as the ISSF Statutes, Rules and Regulations plus the relevant Technical Rules for the shooting disciplines concerned.

8.1.3 Judges' EST Control Licences are of one (1) category – depending upon the category "A" or "B" of the shooting discipline Licence held.

8.1.4 A course fee fixed by the Executive Committee is payable by each student registering for an Official ISSF course for the first time. This covers the

CamScanner

preparation of detailed notes issued to students, and the cost of issuing a handbook, plus future updating as EST equipment is improved, and the Licence when issued.

8.1.5 Students may attend courses on more than one (1) occasion; to update their knowledge and to improve their result to gain an EST Licence, if they do not already have one; no further fee is payable.

8.2 As for all official ISSF courses, official recognition of judges' courses for Electronic Scoring Target Control will be decided by the ISSF Secretary General and the Chairman of the ISSF Judges Committee.

8.2.1 Instructors for these courses are chosen from those having achieved a high standard on a previous course and having considerable practical experience.

8.2.2 Assistant Instructors, with similar qualifications, also may be designated depending upon the number of students attending.

8.2.3 An ISSF Test Paper is provided, together with all supporting test material to conduct a Final Test.

8.2.4 The completed Test Papers are returned to the ISSF for formal marking to ensure a uniform standard is set as the basis for the recommendations for EST Licences.

8.2.5 Students are given an indication of their result after the official marking. On the recommended course programme, the answers are discussed with the class, so that students gain a good idea of where they may have been wrong.

8.3 Electronic Scoring Target Control Licences (Category 6)

8.3.1 The results are provided to the ISSF Judges Committee annually and the issue of Licences is made after a decision by that committee. No specific application is required, and no separate fee is payable.

9 INSTRUCTORS LICENCE.

9.1 The instructors must be highly qualified, be holders of a valid ISSF "A" licence and have regularly conducted and delivered previous courses. Instructors should have attended and passed the ISSF "A" Licence Instructors Workshop and where deemed appropriate acted as an assistant instructor prior to appointment themselves.

9.2 The "Instructor' Licence, authorises the holder to act in all situations as described for "A" Licence holder. In addition, Judges in this category are permitted to instruct and conduct official ISSF judge's courses. In order to archieve this level, selected judges need to have successfully attended an ISSF instructors workshop.

9.3 Continental Confederations must nominate their own candidate to participate at the Instructors workshop, depending on their requirement and need for instructors.

9.4 The ISSF instructors workshop will be organised by the ISSF Secretary General and ISSF Judges' committee.

9.5 The ISSF Education programme will be developed.

9.6 The same support material in English for the Judges' training course will be given to the Instructors.

CamScanner

9.7 The support material will explain the objective of the Judges' training, rules intent and application and will include practical situational and awareness training.

10 APPLICATION FORMS FOR LICENCES

10.1 To simplify the administration of Licence issue, the following forms should now be used when applying for a new "B" Licence, upgrading, or renewal.

10.2 Each application must be accompanied by a digital photograph with a resolution of 300 dpi must be sent by the federation concerned. The photograph should have a neutral background.

CamScanner

Application for Judge's "B" Licence

The Federation of [ ] endorses the application of:

Name of national federation

Family Name(s)	Given Name(s)

Date of birth [ ][ ][ ][ ][ ][ ][ ][ ]

Day Month Year

Gender Man ☐ Woman ☐

To be Licenced as an ISSF "B" Judge in the following disciplines:						
Please specify if you already hold an ISSF Licence in any discipline. If yes, the Licence number is:						
Rifle	Pistol	Shotgun	Running Target	Target Sprint	Paper Target Control	EST (Only if passed official course)
☐	☐	☐	☐	☐	☐	☐

The Applicant has attended official ISSF Judges' Course(s) as follows:

Discipline	Course Dates	Location	Instructor

This is to certify that the information given is correct, that the applicant has experience as a national judge, and that the photograph is of the applicant.

Signed for the Federation:		send a digital photo (300dpi) to the ISSF Headquarters
Name typed or printed:		

CamScanner

(Page two of the application for a Judges "B" Licence)

Disability	
I do not have any physical impairment that would prevent me from performing all duties required as a judge for the disciplines for which the Licence is required.	
Criminal Record	
Do you have a criminal record relating to harassment and abuse, illegal drugs or substances and/or any law designed to protect minors?	Yes ☐ No ☐

Language Capability						
Provide an assessment of your language capability in the ISSF languages:						
Language	Speak			Understand		
	Fluent	Well	Basic	Fluent	Well	Basic
English						
Arabic						
French						
German						
Russian						
Spanish						

Applicant's Declaration			
I affirm that all information contained in my application Is true and correct. I acknowledge to be bound by the ISSF Official Statutes, Rules and Regulations (including the ISSF Code of Ethics) in the respective applicable version as published in the "Rules" section on www.issf-sports.org and I confirm that I have read and understood the ISSF Data Protection Regulation as also published in the "Rules" section on www.issf-sports.org.			
Date:		Signature of Applicant:	

Fee enclosed: Euro 50.00 ☐ Digital Photo sent to ISSF Headquarters ☐

International Shooting Sport Federation Official Use:			
Date Acknowledged and Checked			
Recommended		Not recommended	
Class Licence		Postponed until	
By		Date	
	For the Judges Committee		

Rifle	Pistol	Shotgun	Running Target	Target Sprint	Paper Target Control	EST (Only if passed official course)
☐	☐	☐	☐	☐	☐	☐

Date of issue		Invoice Number		Dispatched (mailed, given by hand)	

CamScanner

Application for Judges' "A" Licence

The Federation of [ ] endorses the application of:

Name of national federation

Family Name(s)	Given Name(s)

Date of birth [ ][ ][ ][ ][ ][ ][ ][ ]

Day Month Year

Gender Man ☐ Woman ☐

To be Licenced as an ISSF "A" Judge in the following disciplines:						
Current "B" Licence Number:						
Rifle	Pistol	Shotgun	Running Target	Target Sprint	Paper Target Control	EST (Only if passed official course)
☐	☐	☐	☐	☐	☐	☐

The Applicant has been an official ISSF Judge on the following **FIVE** occasions:

	Jury Duties (Rifle etc.)	Event (Competition)	Dates	Location (City/Country)	No of nations Participating
1					
2					
3					
4					
5					

This is to certify that the information given is correct, that the applicant is conversant with the current ISSF Rules, and the two photographs are of the applicant.

Signed for the Federation:		send a digital photo (300dpi) to the ISSF Headquarters
Name typed or printed:		

CamScanner

Disability
I do not have any physical impairment that would prevent me from performing all duties required as a judge for the disciplines for which the Licence is required.

Criminal Record	
Do you have a criminal record relating to harassment and abuse, illegal drugs or substances and/or any law designed to protect minors?	Yes ☐ No ☐

Language Capability						
Provide an assessment of your language capability in the ISSF languages:						
Language	Speak			Understand		
	Fluent	Well	Basic	Fluent	Well	Basic
English						
Arabic						
French						
German						
Russian						
Spanish						

Applicant's Declaration			
I affirm that all information contained in my application Is true and correct. I acknowledge to be bound by the ISSF Official Statutes, Rules and Regulations (including the ISSF Code of Ethics) in the respective applicable version as published in the "Rules" section on www.issf-sports.org and I confirm that I have read and understood the ISSF Data Protection Regulation as also published in the "Rules" section on www.issf-sports.org.			
Date:		Signature of Applicant:	

Fee enclosed: Euro 25.00 ☐ Digital Photo sent to ISSF Headquarters ☐

International Shooting Sport Federation Official Use:						
Date Acknowledged and Checked						
Recommended				Not recommended		
Class Licence				Postponed until		
By					Date	
	For the Judges Committee					
Rifle	Pistol	Shotgun	Running Target	Target Sprint	Paper Target Control	EST (Only if passed official course)
☐	☐	☐	☐	☐	☐	☐

Date of issue		Invoice Number		Dispatched (mailed, given by hand)	

CamScanner

Application for Judge's Licence Renewal

The Federation of [ ] endorses the application of:

Name of national federation

Family Name(s)	Given Name(s)

Date of birth [ ][ ][ ][ ][ ][ ][ ][ ]

Day Month Year

Gender Man ☐ Woman ☐

to have the Licence renewed:						
Licence Number:				Class	A	B
Disciplines:						
Rifle	Pistol	Shotgun	Running Target	Target Sprint	Paper Target Control	EST (Only if passed official course)
☐	☐	☐	☐	☐	☐	☐

The ISSF Member Federation confirms that the applicant has obtained experiences as a Jury Member in international, regional or national level competitions during the last Five (5) year period.
The applicant has good knowledge of the current ISSF Rules and Regulations.

This is to certify that the information given is correct, and the photograph(s) are of the applicant.

Signed for the Federation:		send a digital photo (300dpi) to the ISSF Headquarters
Name typed or printed:		

Fee enclosed: Euro 25.00 ☐ Digital Photo sent to ISSF Headquarters ☐

CamScanner

Article 3.12.3.10, Annex "S"

Guidelines for Shotgun Referee Licencing

1 GENERAL 89

2 ACQUISITION OF A SHOTGUN REFEREE'S LICENCE 89

3 VALIDITY AND EXTENSION OF THE LICENCE 90

4 EXPIRATION OF A LICENCE 90

5 SHOTGUN REFEREES' COURSES 90

6 EYESIGHT CERTIFICATES FOR SHOTGUN REFEREES 92

7 SPECIAL ADMINISTRATIVE PROCESS FOR THE ISSUANCE OF SHOTGUN REFEREES' LICENCES 92

8 APPLICATION FORMS FOR SHOTGUN REFEREES' LICENCES AND EYESIGHT 93

SPECIAL NOTE:

In the context of this Annex, the word "Referee" refers to an accredited ISSF Shotgun Referee licence holder.

CamScanner

1 GENERAL

1.1 For the achievement of its purposes the International Shooting Sport Federation Licences Shotgun Referees to act at ISSF supervised shooting competitions and to ensure the fair and equal treatment of all competitors (ISSF General Regulations). Referees must be experienced and fully conversant with the current versions of the ISSF Shotgun Rules for the respective events.

1.2 The ISSF issues Shotgun Referees' licences as confirmation of qualification.

1.3 The ISSF Shotgun Referees' licence is of one (1) category and can be issued in the events Trap (T), Double Trap (DT) and Skeet (S), but only following successful completion of an official ISSF International Shotgun Referees' Course for all three events.

1.4 The ISSF Headquarters and the Chairman of the Judges' Committee maintain a list of all the International Shotgun Referees' licence holders, in consultation with the Chairman of the Shotgun Committee.

2 ACQUISITION OF AN INTERNATIONAL SHOTGUN REFEREES' LICENCE

2.1 The applicant must have the necessary capability and experience as a Referee and must be able to speak English.

2.2 ISSF Shotgun Referees' licences are not granted to active athletes who still participate in competitions where world records may be established. If the holder of an Shotgun Referees' licence wishes to participate as an athlete, he must return the licence to the ISSF Headquarters for cancellation.

2.3 For the acquisition of an ISSF Shotgun Referees' licence, preparatory instruction and training is necessary. The applicants should possess a national Shotgun Referees' licence of the highest level issued by their National Federation.

2.4 For the acquisition or renewal of an ISSF Shotgun Referees' licence, the applicant must have passed an eyesight examination.

2.5 An applicant's National Federation must sign the completed official ISSF Shotgun Referees' application form to confirm the contents and support the application. The National Federation must then send it to the ISSF Headquarters with the original eyesight examination form. See forms at the end of these Guidelines.

2.6 Applications should be submitted as soon as possible, but no later than 31 December each year for licences to be issued in the following year. In order that applicants are not disadvantaged by any time considerations, once applications are received by ISSF Headquarters, the Chairman of the Judges' Committee will endeavour to authorize the issue of licences as soon as possible. This does not negate the requirement for the Judges' Committee to approve and confirm the granting of these licences at their annual meeting.

2.7 The ISSF Judges' Committee will evaluate and approve appropriate applications, if necessary, with help from the ISSF Medical Committee during its annual meeting. Any queries will be referred to the Shotgun Committee.

2.8 After approval, the ISSF Headquarters will issue the Shotgun Referees' licences. To be valid they must be signed by the ISSF Secretary General and the Chairman of the ISSF Judges Committee.

CamScanner

2.9 These licences are sent to the National Federations for delivery to the licence holders.

2.10 A fee of Euro 50.00 must be paid for a new licence.

3 VALIDITY AND EXTENSION OF THE LICENCE

3.1 All ISSF International Shotgun Referees' licences are issued for a period of five (5) years.

3.2 After expiration of this period, the licence may be renewed.

3.3 The National Federation must submit all requests for renewal to the ISSF Headquarters accompanied by a completed Renewal Form (see form at end of Guidelines).

3.4 The current licence should not be returned when applying for a renewal, though it will cease to be valid after the expiry date. Applications for renewal should be submitted at least three months before expiry.

3.5 The Chairman of the Judges' Committee in co-operation with the ISSF Headquarters and the Chairman of the Shotgun Committee and in some cases also with a member of the Medical Committee will deal with all renewals. Renewed licences will be returned to the National Federation.

3.6 A fee of Euro 25.00 will be charged for each renewal.

4 EXPIRATION OF A LICENCE

4.1 When an ISSF Shotgun Referees' licence expires after five (5) years, licence holders will be taken off the ISSF list if not renewed by application within one (1) year. In such a case any future licence must be applied for in accordance with the Acquisition of a licence, including attendance at course(s).

4.2 The licence holder's National Federation, at any time, has the right to apply for cancellation of an ISSF Shotgun Referees' licence. The licence holder may be taken off the list, in such a case the licence must be returned to the ISSF.

4.3 A Shotgun Referees' licence may be cancelled if an eyesight test shows the licence holder does not meet the required standard any longer, or if a holder does not fulfil his duties as a Referee, or harms the interest or reputation of the ISSF. The holder will be taken off the ISSF list and the licence must be returned to the ISSF. All ISSF International Shotgun Referees' licences remain the property of the International Shooting Sport Federation.

5 SHOTGUN REFEREES' COURSES

5.1 Only courses that have been approved and recognized by the ISSF will be considered as official training courses for Shotgun Referees. Applications for recognition must be submitted to the ISSF Headquarters using the form "Application for Shotgun Referees' Courses" (available from ISSF Headquarters). If a course is required in exceptional circumstances at short notice, then the application must be sent to ISSF at least 3 months before the date of the intended course. All applications and subsequent publication of courses must include the following details:

5.1.1 Where the course will be held;

5.1.2 The dates of the course;

CamScanner

5.1.3 English Language is mandatory;

5.1.4 From which National Federation(s) the Participants will come; Normally, applications will be considered when received from other National Federations within the same Continent, but cannot be guaranteed.

5.1.5 Name of the Instructor recognised by ISSF Judges' Committee.

5.1.6 The expenses that will be met by the National Organiser; (should be equivalent with 5.2.2)

5.2 The basis for ISSF Shotgun Referees' courses is the **ISSF Shotgun Referees' Training Guidelines** (as prepared and maintained by the Shotgun Committee). The objective is to ensure that applicants for ISSF Shotgun Referees' licences have a proper understanding of the Rules, and their application, in respect of the events for which they seek to be licenced as Shotgun Referees. Applicants for ISSF Shotgun Referees' courses must already possess the highest National licence as a Shotgun official.

5.2.1 Every part of the course should commence with an explanation of the purpose and the content of the course, followed by the duties of a Shotgun Referee.

5.2.2 The Organizer must pay the costs for travelling, accommodation, meals and local transportation for the instructor(s).

5.3 Courses should last a minimum of two (2) days.

5.4 The Organizer is responsible for providing a training room with adequate facilities for efficient instruction, and for the comfort of those attending.

5.5 A maximum of 15 participants are permitted per instructor.

5.5.1 The participants should possess a good background of practical experience as a Shotgun official before attending a course. Participants with little experience must obtain practical experience under the guidance of an experienced Referee in a series of national competitions before applying for an ISSF Shotgun Referees' licence.

5.5.2 The Organizer must publish details of the course as early as possible. The announcement must include all details about dates, times, accommodation, meals, local transportation, costs and any other important information.

5.5.3 Every participant must be given a registration form to be filled in with his name, address and date of birth. The participant must indicate his experience and any special knowledge he has acquired during competitions in which he acted as an official, and the qualifications obtained in his National Federation.

5.5.4 Only participants entered by National Federations will be accepted.

5.6 Participants who complete the course satisfactorily will be issued with ISSF diplomas. ISSF certificates of attendance will not be issued, but organizers are encouraged to provide them.

5.7 The ISSF Diploma does not guarantee the issue of an ISSF Shotgun Referees' licence.

5.8 At the end of the course the instructor must write and submit a report, using the form "Report Official ISSF Shotgun Referees' Course" with a list of those attending and those completing the course to the standard required for an ISSF Shotgun Referees' licence stating for which they passed. Where possible the report should indicate whether the individuals already possess sufficient practical experience, or whether further practical experience appears

CamScanner

appropriate before an ISSF Shotgun Referees' licence is granted. The report must be sent as soon as possible to the ISSF Headquarters for the attention of the ISSF Secretary General and the Chairman of the ISSF Judges' Committee.

5.9 National Federations not having available suitably qualified ISSF Instructor licence holders to conduct official ISSF Courses under the terms above are encouraged to request assistance from the Chairman of the ISSF Judges' Committee.

6 EYESIGHT CERTIFICATES FOR SHOTGUN REFEREES

6.1 To ensure that Shotgun Referees are able to carry out their duties in a fair and impartial manner, they must have good eyesight. Accordingly, all Shotgun Referees must have passed an eye and vision examination made by an ophthalmologist or other appropriate medical practitioner.

6.2 The form shown at the end of these Guidelines must be submitted with the application for a licence. The certificate must not be older than three (3) months when the licence application or licence renewal application is made.

6.3 All Shotgun Referees must be in possession of an eyesight certificate, which is not more than two (2) years old, when undertaking the duties of a Shotgun Referee at any ISSF competition. Such certificates must be checked by the Chief of Referees before any competition commences.

6.4 **Eyesight Standards**

6.4.1 Visual acuity must be 0.7 (equal to 6/9 and 20/30) or better in each eye with or without correction.

6.4.2 The night vision must not be impaired.

6.4.3 The colour vision must be normal.

6.4.4 There must be no diplopia (double vision).

6.4.5 The binocular visual field must be normal.

6.4.6 Diabetes or any pathological eye conditions that may cause a substantial deterioration in visual acuity or visual field within four (4) years must be notified to the ISSF in order to give the ISSF the possibility to require further investigations or to decide a shorter period of licence validity.

6.5 In case of any impairment to the vision of any Shotgun Referee, the Referee must not be allowed to undertake duties until his eyesight is again certified to be at least the minimum standard.

7 SPECIAL ADMINISTRATIVE PROCESS FOR THE ISSUANCE OF SHOTGUN REFEREES' LICENCES

7.1 In exceptional cases an ISSF Shotgun Referees' licence can be issued when it is necessary to ensure there are sufficient qualified personnel at events where world records may be established. For example, when a change of venue is necessary, or when any change of a previously assigned Referee is necessary.

7.2 The National Federation must submit an application.

7.3 The applications will be considered and decided by the ISSF Secretary General together with the Chairman of the ISSF Judges' Committee.

7.4 Licences issued in this way will be included in the list of licence holders. At the

CamScanner

next meeting of the ISSF Judges' Committee the Chairman must inform the Committee of any licences granted in this way.

7.5 Licences issued in this way must only be given to well qualified individuals. The usual standards must be met; only the administrative process is changed.

8 APPLICATION FORMS FOR SHOTGUN REFEREES' LICENCES AND EYESIGHT EXAMINATION FORM AND CERTIFICATE

8.1 To simplify the administration of licence issue, the attached forms must be used when applying for a Shotgun Referees' licence.

8.2 For each application a digital photograph with a resolution of 300dpi must be sent to the ISSF Headquarters. The photograph should have a neutral background.

CamScanner

Application for Shotgun Referees' Licence

The Federation of [ ] endorses the application of:

Name of national federation

Family Name(s)	Given Name(s)

Date of birth [ ][ ][ ][ ][ ][ ][ ][ ]

Day Month Year

Gender Man ☐ Woman ☐

Please specify if you already hold an ISSF Judges' Licence in any discipline.:		The number is	
To be licenced as an ISSF Shotgun Referee in the Trap, Double Trap and Skeet events			
The Applicant has attended official ISSF Shotgun Referees' Course(s) as follows:			
Events	Course Dates	Location	Instructor
With the signature the ISSF Member Federation certifies that the information given is correct, that the applicant has experience as a national Referee, and that the photographs are of the applicant.			

This is to certify that the information given is correct, that the applicant has experience as a national judge, and that the photograph is of the applicant.		
Signed for the Federation:		send a digital photo (300dpi) to the ISSF Headquarters
Name typed or printed:		

CamScanner

Disability	
I confirm, I am physically able to perform and fulfil all of the requirements and duties of an ISSF Shotgun Referee.	
Criminal Record	
Do you have a criminal record relating to harassment and abuse, illegal drugs or substances and/or any law designed to protect minors?	Yes ☐ No ☐

Language Capability						
Provide an assessment of your language capability in the ISSF languages:						
Language	Speak			Understand		
	Fluent	Well	Basic	Fluent	Well	Basic
English						
Arabic						
French						
German						
Russian						
Spanish						

Applicant's Declaration			
I affirm that all information contained in my application is true and correct. I acknowledge to be bound by the ISSF Official Statutes, Rules and Regulations (including the ISSF Code of Ethics) in the respective applicable version as published in the "Rules" section on www.issf-sports.org and I confirm that I have read and understood the ISSF Data Protection Regulation as also published in the "Rules" section on www.issf-sports.org.			
Date:		Signature of Applicant:	

I consent to the ISSF's use of my health data as provided in the Eyesight Test Form and Certificate. I am aware that I have the right to withdraw my consent, but that such withdrawal does not affect the lawfulness of any processing that was based on my consent before the withdrawal. I am aware that a withdrawal of my consent could prevent my continued engagement as ISSF Shotgun Referee.			
Date:		Signature of Applicant:	

Fee enclosed: Euro 50.00 ☐ Digital Photo sent to ISSF Headquarters ☐

CamScanner

(Page three of the application for a Shotgun Referees' Licence)

International Shooting Sport Federation Official Use:			
Date Acknowledged and Checked			
Recommended		Not recommended	
Class Licence		Postponed until	
By		Date	
	For the Judges Committee		

Trap	Double Trap	Skeet
☐	☐	☐

Date of issue		Invoice Number		Dispatched (mailed, given by hand)	

CamScanner

Application for International Shotgun Referees' Licence Renewal

The Federation of [ ] endorses the application of:

Name of national federation

Family Name(s)	Given Name(s)

Date of birth [ ][ ][ ][ ][ ][ ][ ][ ]

Day Month Year

Gender Man ☐ Woman ☐

to have the licence renewed:		
Licence Number:		
The ISSF Member Federation confirms that the applicant has obtained experiences as a Shotgun Referee in competitions under ISSF rules and regulations during the last five (5) year period. The applicant has good knowledge of the current ISSF Rules and Regulations.		
With the signature the ISSF Member Federation certifies that the information given is correct and the photograph is of the applicant.		
Signed for the Federation:		send a digital photo (300dpi) to the ISSF Headquarters
Name typed or printed:		

Fee enclosed: Euro 25.00 ☐ Digital Photo sent to ISSF Headquarters ☐

CamScanner

Eyesight Examination Form and Certificate

Applicant

Family Name(s)	Given Name(s)

Date of birth

Day Month Year

Certifying medical practitioner / ophthalmologist:			
Name, qualifications and medical specialty (for example: Dr AB Cook, MD, General Practitioner:)			
Name			
Address			
Email			
Phone		Fax	
Mobile phone			
1.	Is the visual acuity 0.7 (6/9 or 20/30) or better on each eye? Yes, without correction ☐ Yes, but only with correction ☐ Corrections: Left: …… Right: …….……		No ☐
2.	Is there any evidence or history of impaired night vision?		Yes ☐ No ☐
3.	Is there any defect in colour vision? If yes, what kind of defect:		Yes ☐ No ☐
4.	Is there any sign of diplopia?		Yes ☐ No ☐
5.	Are there any defects in the binocular visual field? If yes, attach vision field maps!		Yes ☐ No ☐
6.	Is there any evidence of other ophthalmic pathological conditions or diabetes? If yes, what condition(s):		Yes ☐ No ☐
Medical practitioner's / ophthalmologist's declaration:			
I, certify that I have examined the above named person, confirmed his/her identity and that I have correctly answered the questions above.			
Date of examination:		Name:	
Signature and Stamp:			

For ISSF official use only:
Investigation ☐ Rejected ☐ Approved ☐

CamScanner

Article 3.12.3.11, Annex "A"

Guidelines for Public Affairs Activities

1 Public Relations with Shooting Sport Equipment Suppliers

The ISSF relies on the cooperation, collaboration and support from all firms involved in the production and distribution of items of equipment used in the shooting sport. Free facilities for firearms and equipment manufactures to service their products must be made available.

Firms may rent space for displays at venues where ISSF supervised events and meetings are held.

Proposals for promotional and advertisement programmes that involve ISSF participation or endorsement can be submitted by firms. Each programme requires a specific agreement.

The ISSF may grant a licence to use the official emblem of the ISSF. This will permit greater promotion of the shooting sport.

Advertisers' requests, specifying detailed proposals and terms, must be submitted to the ISSF Secretary General, who will present them for consideration by the ISSF Executive Committee.

All income must be deposited in the ISSF accounts.

2 Public Relations with Media

The ISSF intends to have the best possible public relations with the press, radio and TV services in order to achieve extensive media coverage of ISSF Championships and events. To support successful media relations, Organizing Committees must coordinate with the ISSF Communication Manager and provide:

- a press room at the shooting ranges with all modern telecommunication systems, free internet service, telephone, duplication facilities and other appropriate resources;
- a responsible person to be in charge of the media;
- areas where interviews and press conferences can be held with officials, athletes and coaches;
- procedures to permit media access to the shooting ranges during the competition for filming and reporting;
- procedures to give media personnel reasonable access to athletes and team leaders.

CamScanner

3 Public Relations with the Community

The ISSF desires to establish good relations with members of the public in all communities where ISSF Championships, events and meetings are conducted.

In all ISSF Championships, events and meetings, the laws, rules and ecological regulations of the community must be respected.

The shooting sport, in the tradition of the Olympic Spirit, must work to create goodwill among all persons.

Further details are available in the “Guidelines for Organizing ISSF Championships” and “Guidelines for the Organization of the Media Work”.

CamScanner

Article 3.12.3.12, Annex “B”

Guidelines for Media Coverage, Broadcasting and Advertising

1 All details about commercial rights including Media Coverage, Broadcasting and Advertising of all ISSF Championships and other ISSF official events (General Assemblies, Congresses etc.) are the property of the International Shooting Sport Federations and further specified in the “ISSF Eligibility, ISSF Commercial Rights and ISSF Sponsorship/Advertising Rules” within this Rule Book.

2 Details about Media Coverage and Broadcasting can be found in the “Guidelines for the Organization of Media Work” available at ISSF Headquarters.

CamScanner

Article 3.12.3.13, Annex "AC"

Athletes Committee

1 AIMS AND OBJECTIVES OF THE ATHLETES COMMITTEE

1.1 To gather information and opinions from athletes on their needs and problems with regard to the Olympic Games and ISSF Championships.

1.2 To voice opinions and make recommendations on these topics and forward them to the relevant bodies of the ISSF.

1.3 To establish contact and coordinate activities with the Athletes Committees of other international federations.

1.4 To participate in working groups, to ensure the best possible conditions for the training, accommodation and living conditions for the athletes as well as for the conduct of the competitions at the major international championships.

1.5 To support the fight against drugs and doping.

1.6 To establish a direct link with the athletes within the ISSF.

2 STRUCTURE

2.1 The ISSF Athletes Committee must be composed of seven (7) members, four (4) of them elected by the athletes participating in the ISSF World Championships which are held every four (4) years and three (3) members appointed by the ISSF Executive Committee.

2.1.1 In addition to the four (4) elected athletes, three (3) additional athletes will be appointed by the ISSF Executive Committee as equal members of the committee in order to guarantee a balance between continents, genders and disciplines.

2.2 The following elections will be held during the World Championships.

2.2.1 The appointment of three (3) additional members by the ISSF Executive Committee will follow in a meeting after the athletes have elected the four (4) committee members.

2.3 To qualify as a candidate, an athlete must never have been found guilty of a doping offence and must have participated in either the last Olympic Games or in the previous or present World Championships.

2.4 The Chairman of the ISSF Athletes Committee will be elected by the ISSF Executive Committee in its meeting following the election of the committee members.

2.5 The term of office is four (4) years, and all members may be re-elected. A member can serve on the committee for no longer than four (4) years after his/her retirement from international competition.

2.6 The Chairman will become a member of the Executive Committee and will participate in all meetings of the Executive Committee as a representative of the athletes with full voice and vote.

2.7 The ISSF Athletes Committee may hold one (1) or two (2) meetings per year.

CamScanner

3 ELECTION PROCEDURE

3.1 The ISSF Member Federations may present a candidate for the ISSF Athletes Committee according to the Guidelines to the Constitution, but not earlier than two (2) months before and not later than 15 days before the day of the opening ceremony of the World Championships.

3.2 The ISSF Headquarters will establish a list of all nominated candidates including a brief biography. This list will be published on the ISSF website.

3.3 With the accreditation of all participating athletes in the World Championships, each athlete entered in the men or women categories will be issued a voting paper showing all candidates and the information on the voting procedure.

3.4 Each athlete may only vote for a maximum of four (4) candidates from the voting ballot.

3.5 The four (4) athletes, who have received the highest number of votes, will be considered elected as members of the ISSF Athletes Committee.

4 APPOINTMENT OF THREE ADDITIONAL MEMBERS

4.1 The ISSF Executive Committee will appoint three (3) additional members to the Athletes Committee at its next meeting following the election of athletes.

4.2 The appointment will be conducted by a selection using the list of all candidates for the election.

4.3 In the same meeting, the Executive Committee shall elect the Chairman of the Athletes Committee.

5 FINANCIAL SITUATION OF THE COMMITTEE

5.1 In general, the ISSF Member Federation that nominated the elected member has the responsibility of supporting the athlete's participation in committee meetings according to the Guidelines to the Constitution.

5.2 The ISSF Executive Committee will decide on any financial support for the purpose of the meeting and will fix the amount of the daily allowance for each athlete participating in the meeting.

6 METHOD OF COMMUNICATION

6.1 There will be an official website for the ISSF Athletes Committee within the framework of the ISSF website. The internet can be one of the communication tools.

6.2 Announcements will be made in the ISSF NEWS magazine.

7 REMARKS

7.1 Athletes elected or appointed to the Athletes Committee must be aware of their responsibilities as representatives of the athletes.

7.2 They must make every effort to attend all meetings.

7.3 They should be motivated to contribute to the shooting sport and the Olympic Movement.

7.4 They should also be responsible for the education of young athletes.

CamScanner

7.5 They should be educated in respect of positions as representatives, or officials, in both international and national federations during the duration of their appointment as members of the Athletes Committee.

CamScanner

4
ISSF ELIGIBILITY, ISSF COMMERCIAL RIGHTS AND ISSF SPONSORSHIP / ADVERTISING RULES

NOTE:

Where figures and tables contain specific information, these have the same authority as the numbered rules.

VERY IMPORTANT NOTE:

Please be aware that for the Olympic Games, IOC Rule 50, Advertising, Demonstrations and Propaganda, and the accompanying publication "Guidelines Regarding Authorised Identifications" apply!

CamScanner

4.1 ELIGIBILITY OF ATHLETES 107

4.2 ISSF COMMERCIAL RIGHTS 108

4.3 SPONSORSHIPS AND ADVERTISING 109

4.4 IDENTIFICATIONS ON ATHLETES' EQUIPMENT, CLOTHING, ACCESSORIES AND FOOTWEAR 110

4.5 RULES FOR MANUFACTURER IDENTIFICATION 110

4.6 RULES FOR SPONSOR MARKINGS 111

4.7 CONTROLS AND SANCTIONS 111

4.8 APPROVAL 112

CamScanner

4.1 ELIGIBILITY OF ATHLETES

4.1.1 The ISSF Eligibility Rules specify the conditions under which athletes are eligible to participate in ISSF Championships (see ISSF General Regulations). These Eligibility Rules must be applied strictly in all ISSF Championships.

4.1.2 The ISSF recognizes Rule 40 (Participation in the Olympic Games), Rule 41 (Nationality of Competitors) and Rule 50 (Advertising, Demonstrations and Propaganda) of the Olympic Charter and their corresponding Bye-Laws as basic documents for the ISSF Eligibility Rules.

4.1.3 To be eligible to participate in ISSF Championships, an athlete must be entered in the Championship in accordance with Article 3.7 of the ISSF General Regulations by his/her National Federation, which must be an ISSF Member Federation in good standing. For the Olympic Games or Continental Games, it is the respective NOC that enters the athlete. The athletes entered must:

4.1.3.1 Be selected to participate in accordance with procedures established by the athlete's National Federation, except that athletes entered in the Olympic Games also must comply with the "Special Regulations for the Participation in the Shooting Sport Events of the Olympic Games" (Annex "Q", ISSF General Regulations);

4.1.3.2 Be a national of the country they represent in accordance with the Olympic Charter and ISSF General Regulations;

4.1.3.3 Not have been guilty of improper or unsportsmanlike conduct, particularly through the use of doping, violence, racism and irregular or illegal betting activities;

4.1.3.4 Not have violated ISSF rules for sponsorship or advertising as specified in these Rules.

4.1.4 Athletes who compete in ISSF Championships may accept, directly or indirectly, money payments or other prizes as awards or as an inducement to take part in a competition, except that no athlete's participation in the Olympic Games may be conditional on any financial consideration (Olympic Charter, Bye-law to Rule 40).

4.1.5 An athlete who knowingly takes part in a competition vetoed by the ISSF may be excluded from ISSF Championships for a prescribed period by the Executive Committee.

4.1.6 A National Federation that enters an athlete in an ISSF Championships who is excluded from competition in accordance with ISSF Anti-Doping Regulations or other ISSF Rules shall lose all its privileges except the right to be represented at the next General Assembly.

4.1.7 Athletes from a nation with a suspended National Federation may participate in ISSF Championships upon decision of the Executive Board, but they must compete as Independent Shooting Participants (ISP) under the ISSF flag, not the flag of their nation.

4.1.8 Where the eligibility of a female athlete is questioned due to possible hyperandrogenism, and a formal written request has been made to do so to the ISSF Medical Committee, an Expert Panel comprised of members of the ISSF Medical Committee and other experts shall be appointed to make an evidence-based determination on the eligibility of the athlete. In so doing, the ISSF Medical Committee shall generally and substantially follow the principles of the IOC framework on fairness, inclusion and non-discrimination on the

CamScanner

basis of gender identity and sex variations.

4.1.9 ISSF follows the principles of the IOC framework on fairness, inclusion and non-discrimination on the basis of gender identity and sex variations. Transgender athletes must first request from the ISSF Medical Committee that they be deemed eligible to participate in ISSF Championships prior to seeking an ISSF ID. The Medical Committee shall then make a determination on eligibility based on its evidence-based eligibility criteria, which shall be posted on the ISSF website.

4.1.10 Any determination made under article 4.1.7 or article 4.1.8 may be appealed exclusively to the International Court of Arbitration for Sport.

4.1.11 In order to help protect the dignity and privacy of the athlete concerned, requests for investigations, information gathered during investigations, results of investigations and decisions regarding a case (or potential case) of female hyperandrogenism or a case involving a transexual athlete shall be kept confidential and not released or made public by the ISSF.

4.2 ISSF COMMERCIAL RIGHTS

4.2.1 OWNERSHIP AND EXPLOITATION OF COMMERCIAL RIGHTS

In accordance with the ISSF General Regulations (3.11.1), the ISSF is the sole holder of broadcasting, licencing, marketing, merchandising, and equipment rights, and other rights associated with ISSF Championships and other ISSF official events (General Assemblies, Congresses, etc.), with the exception of the Olympic and Continental Games.

For ISSF Championships with the exception of the Olympic and Continental Games, the ISSF has the right to sell its broadcasting and marketing licencing, merchandising, and equipment rights.

The ISSF may decide to assign part of these rights to the organizers of an ISSF Championship on the basis of these guidelines either for a fee or without cost. In such instances, the event organizer and the ISSF must agree on the terms of such agreement.

4.2.2 ISSF LOGO

The ISSF logo is the sole property of the ISSF. Its use requires prior approval by the ISSF. All details concerning the exact look, colour, fonts and usage of the ISSF logo is described in the Guidelines *"ISSF Corporate Identity and Design"* which is available from the ISSF Headquarters.

4.2.3 BROADCASTING AND OTHER MEDIA RIGHTS

Rights include but are not limited to the transmission (live, delayed, or highlights) of visual images (together with any sound transmission for reception in conjunction with those images) to conventional domestic or home television receivers or such yet to be invented devices through which the images will be broadcast or distributed. Such media includes also, but is not limited to, radio, highlight programmes, on-line and internet rights, archive, and news access as well as transmission to mobile devices.

ISSF has created its own website and will exploit commercial and communication opportunities through this and other electronic devices, including those yet to be developed or invented.

CamScanner

4.2.4 **MARKETING RIGHTS AND ADVERTISING RULES**

These rules apply to all official parts of ISSF Championships (training and competition, opening, closing and award ceremonies).

Marketing rights include all marketing, licencing and/or merchandising rights available or yet to be invented for a sport competition. The sale of these rights includes advertising and other appropriate benefits.

Sponsor markings on signs, banners, posters or other material may be displayed on athlete's clothing and equipment on the ranges and on other facilities at ISSF Championships, if such sponsor markings are in accordance with these Regulations.

During the Olympic Games, no advertising with signs, banners, posters or other means is permitted unless such advertising is authorized by IOC Rules, in particular by the Advertising, Demonstrations, Propaganda Code of the Olympic Charter Rule. For the Olympic Games, sponsor markings are not permitted and must be removed or covered if possible, with the same material and colour providing it continues to meet ISSF Rules for thickness and stiffness.

4.2.5 **ON-SITE ADVERTISING**

Advertising on the ranges of ISSF Championships may not be placed in the target areas in such a way that it interferes with the sight picture of the athletes.

The ISSF reserves the right to control sponsor signs at the main entrance of ISSF Championship ranges, official scoreboards, and official score monitors, target frames and Bib Numbers.

The site planning and the sizes of the above advertising spaces require prior approval of the ISSF.

All or part of the available spaces may be contracted to one (1) advertising agency as a package. If an agency is decided upon, the Secretary General must transmit the name of the agency and details of the contract to the organizing country's Member Federation three (3) months before the ISSF Championship or official event.

All other available advertising spaces are the property of the organizer.

4.3 SPONSORSHIPS AND ADVERTISING

4.3.1 A sponsorship is any contract-based support of an athlete or organization provided to the athlete in the form of money, goods or services.

4.3.2 These rules apply to all official parts of ISSF supervised Championships events (training and competition, opening, closing and award ceremonies).

4.3.3 A National Federation may enter into a contract with a commercial firm or organization for sponsorships, the provision of equipment or advertising.

4.3.4 An individual athlete may enter into a contract for an individual sponsorship with a commercial firm or an organization.

4.3.5 These contracts must respect the rules of the National Federations and the ISSF.

CamScanner

4.3.6 Sponsorship contracts may authorize the pictures, names or athletic performances of athletes to appear in the advertisements of contracting commercial firms.

4.3.7 Payments to individual athletes under such contracts may be made either to the athlete or the National Federation.

4.4 IDENTIFICATIONS ON ATHLETES' EQUIPMENT, CLOTHING, ACCESSORIES AND FOOTWEAR

4.4.1 Trademark

A trademark is a distinctive name, symbol, motto, or design that legally identifies a company or its products and services, in order to distinguish them from those offered by others.

4.4.2 Commercial Identification

A commercial identification is any visible occurrence of a trademark or an advertising sign on an item of equipment, accessories, clothing and footwear used during the competition. There are two (2) types of commercial marking:

4.4.3 Manufacturer Identification

A manufacturer identification is a display of the manufacturer name or of a trademark on a product made by the manufacturer (trademark owner) with the aim to identify the product and/or its origin.

4.4.4 Product Technology Identification

The Product Technology Identification means the technical identification (which shall not include any Manufacturer Identification or parts thereof) used on an item of equipment to identify fabric or any technology used in development and manufacturing of the equipment item used.

4.4.5 Sponsor Identification

A sponsor marking is any advertising sign on a product different from a manufacturer identification or a Product Technology Identification.

4.5 RULES FOR MANUFACTURER IDENTIFICATION

4.5.1 Additional restrictions for ISSF Championships

One (1) manufacturer identification per equipment item / clothing / accessories is allowed. Gun parts are considered to be items of equipment.

No manufacturer or sponsor identification is permitted on the blinder on the rear sight or on the front or attached to the hat, cap, shooting glasses or to the headband.

The IOC enforces special rules for the Olympic Games. Details are stated in the Rule 50 of the Olympic Charter and its Bye-Law.

4.5.2 Measuring Manufacturer Identification

Manufacturer identification may be divided into the following categories:

- the manufacturer name; or
- the manufacturer logo; or
- a combination of the manufacturer name and the manufacturer logo.

CamScanner

Manufacturer identification will be measured as follows:

Regular Shapes. Where the manufacturer identification appears as a rectangle or a square, the mathematical rules used to calculate the surface area of the shape will be applied.

Irregular Shapes. Where the manufacturer identification is an irregular shape, a rectangle will be traced around the entire area of the identification and the mathematical rules used to calculate the surface area of the rectangle shall be applied.

Combined Shapes. Where the manufacturer identification combines the manufacturer name with the manufacturer logo, a rectangle will be traced around the entire area of the identification and the mathematical rules used to calculate the surface area of the rectangle shall be applied.

4.6 RULES FOR SPONSOR MARKINGS

4.6.1 General Rules for Sponsor Markings

Equipment or goods supplied to a national team must, with reference to manufacturer identification, conform to the specifications in these Rules.

Sponsor markings on bare skin are not allowed.

During training and competition, all items which have the sole purpose of displaying a sponsor marking and/or which are not used in connection with the competition are not allowed.

No pictures or portraits of athletes wearing clothing with commercial markings in contravention of those specified in these rules may be used in advertising on the venues during training and competition.

The size and appearance of sponsor markings on items used by the athlete is defined in **Table 1**.

4.6.2 Bib (Start) Numbers

Bib (Start) Numbers may include the commercial marking of ISSF Championship sponsors, provided all competitors use numbers marked similarly. Not more than 150cm² or a maximum of 25% of the Bib (Start) numbers area may be dedicated to the general sponsor marking. The Bib (Start) numbers must display the name, initials and the nation of the athlete. The IOC abbreviation of the nation must be used. The minimum height of the letters should be as big as possible but should not be less than 20mm.

For Shotgun the IOC abbreviation of the nation of the athlete and his name and first initial in Latin letters must be displayed (IOC abbreviation at the top) at the back of the shoulder area of his outer athlete garment.

4.7 CONTROLS AND SANCTIONS

The National Federations, together with the ISSF, are responsible for enforcing ISSF Eligibility and Sponsorship Rules.

ISSF Competition Juries are responsible for enforcing ISSF rules concerning advertising on equipment and clothing in the competition and training areas during ISSF Championships.

CamScanner

In case of a violation, the Jury must issue an oral or written warning. An athlete not complying with this warning must not be permitted to start or to continue in the competition.

Decisions by the Competition Juries concerning infringement of these rules may be appealed to the Jury of Appeal whose decision is **FINAL**.

If an advertiser exploits the use of the name, title, or individual picture of an athlete in connection with any advertisement, endorsement or sale of goods without the approval or the knowledge of the athlete, the athlete may give "power of attorney" to his/her National Federation or to the ISSF to enable them, if necessary, to take legal action against the advertiser in question. If the athlete concerned fails to do so, the ISSF shall judge the situation as if the athlete had given full permission to the advertiser.

4.8 APPROVAL

These Eligibility Rules were amended and approved by the Executive Committee of the ISSF on 7th April 2008 in Beijing, CH; on 12th November 2012 in Acapulco, MEX; on 24th November 2013 in Munich, GER; on 1st March 2016 in Munich, GER and on 28th November, 2022 in Sharm el Sheikh, EGY. They replace previous editions of the ISSF Eligibility Rules and became effective immediately.

The following rules are part of these ISSF Eligibility Rule and are available on the IOC website.

Olympic Charter Rule 40 - Participation in the Olympic Games – Bye-Law to Rule 40

Olympic Charter Rule 41 – Nationality of Competitors - Bye-Law to Rule 41

Olympic Charter Rule 50 – Advertising, Demonstrations, Propaganda – Bye-Law to Rule 50

CamScanner

TABLE 1: Special Rules for Sponsor Markings			
	Category/Item	**Applicable Rule**	
	Equipment		
4.6.1.1	Guns	No restrictions apply.	
4.6.1.2	Other Equipment	No restrictions apply for Rifle Slings, Kneeling Rolls, Rifle Stands, Telescope Stands, Spotting Telescopes, Gun Cases, Shooting Bags, Suitcases and Cloth Bags etc.	
	Clothing	**Applicable Rule**	**Other restrictions**
	Competition Clothing		
4.6.1.3	For any of: Outer Shooting Garment (Jacket, Vest, Shirt or Sweat Top etc.)	**Front**: Shoulder and middle area (upper and middle thirds of the torso) no limit (1 ISSF emblem and/or 1 National Federation emblem).	The upper position on the left side (right side for left handed athletes) must be reserved for the ISSF emblem. ONE HALF of the left side must be reserved for the National Federation emblem and/or National Federation flag.
4.6.1.4		**Back:** Shoulder area (upper third of torso) NO markings	RESERVED for the name and IOC abbreviation of the nation of the athlete and/or the Bib Number. If a flag of the nation is used it must be placed to the left (when seen by another person) of the IOC abbreviation.
4.6.1.5		**Back:** Middle area (middle third of torso) NO markings	RESERVED for Bib Number only
4.6.1.6		**Front:** Hip area (lower third of torso) no limit	none
4.6.1.7		**Back:** Hip area (lower third of torso) no limit	none
4.6.1.8		Sleeves: no limit	The same identical marking may appear on both sleeves
4.6.1.9	For any of: Trousers, shorts, sweat pants etc.	Trouser legs only: no limit	The same identical marking may appear on both legs
4.6.1.10	Skirt	No limit	none

CamScanner

4.6.1.11	**Formal Uniforms** Dress Uniforms	**Applicable Rule** Official dress uniforms may carry the name or trademark of up to five (5) sponsors regulated by the National Federation.	A dress uniform includes all clothing worn by the athlete and the members of the team during all official parts of the Championships, where protocol requires a display of the emblem, name or abbreviation of the national federation on the clothing. The single occurrence of manufacturer identification or product technology identification on a dress uniform item does not count as sponsor marking.
4.6.1.12	**Casual Clothing** Casual Clothing	**Applicable Rule** No restrictions apply.	Includes all clothing worn by the athlete on the competition venues under other circumstances than competing or following the protocol in a dress uniform.
	Accessories	**Applicable Rule**	**Other restrictions**
4.6.1.13	Belt		
	Towel		
	Socks		
	Water Bottle		
	Gloves Eyewear	No restrictions apply.	None
	Shooting Glasses		
	Side Blinders		
	Ear Protection		
	Footwear		
4.6.1.14	Headgear	Front and/or back only for country, national federation emblem, ISSF emblem or emblem of an ISSF competition organizer	None
4.6.1.15	Front / Rear Sight Blinders	No sponsor marking	

CamScanner

SPONSOR MARKINGS (ALL)

FRONT of Outer Garment (*shown for Right handed shooter*)

NO SIZE RESTRICTIONS

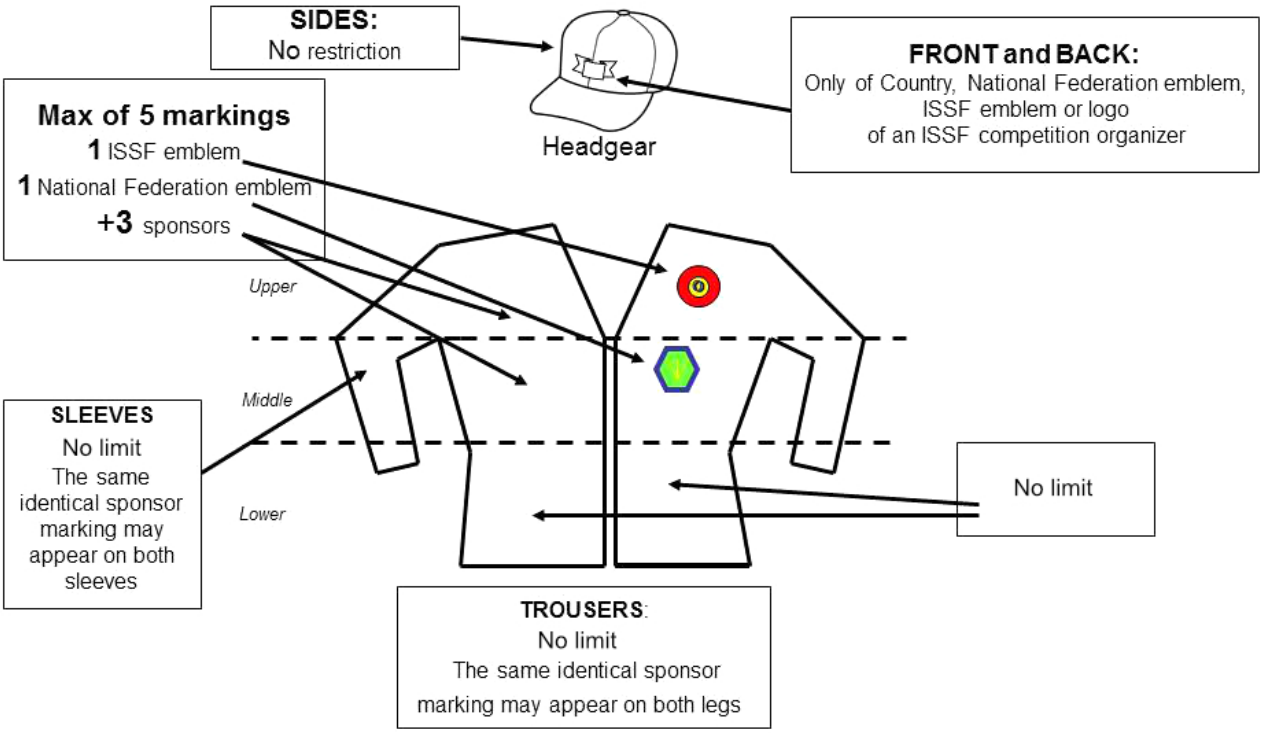

CamScanner

SPONSOR MARKINGS

②

ALL EXCEPT SHOTGUN

BACK of Outer Garment

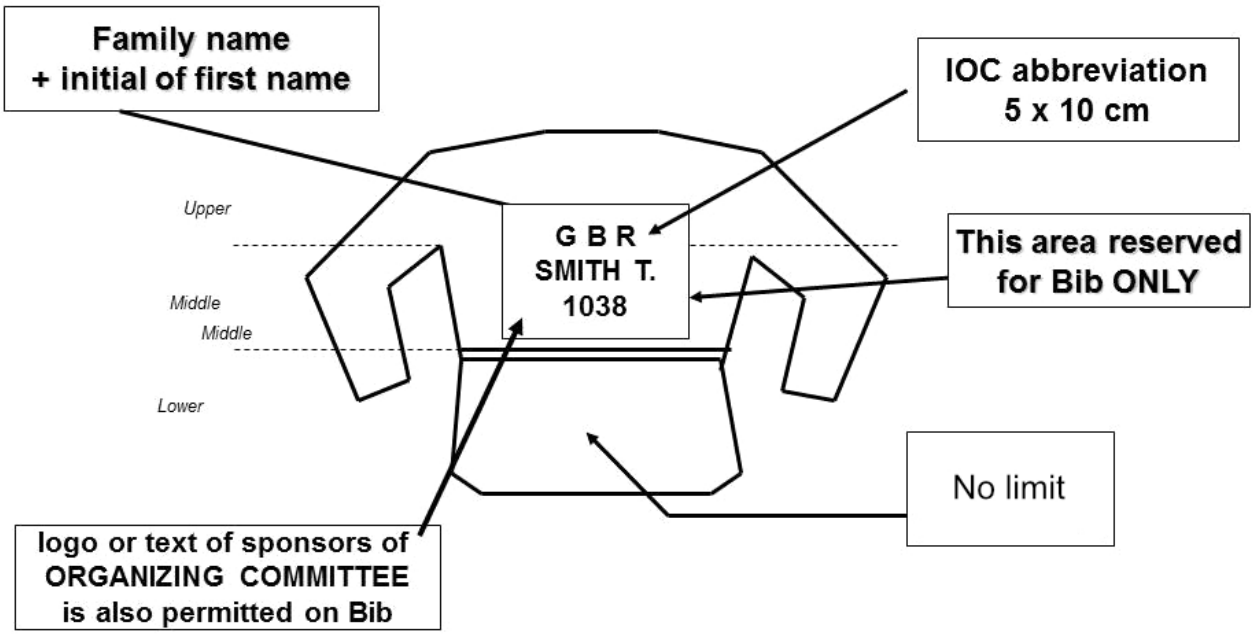

CamScanner

SPONSOR MARKINGS

③

SHOTGUN ONLY

BACK of Outer Garment

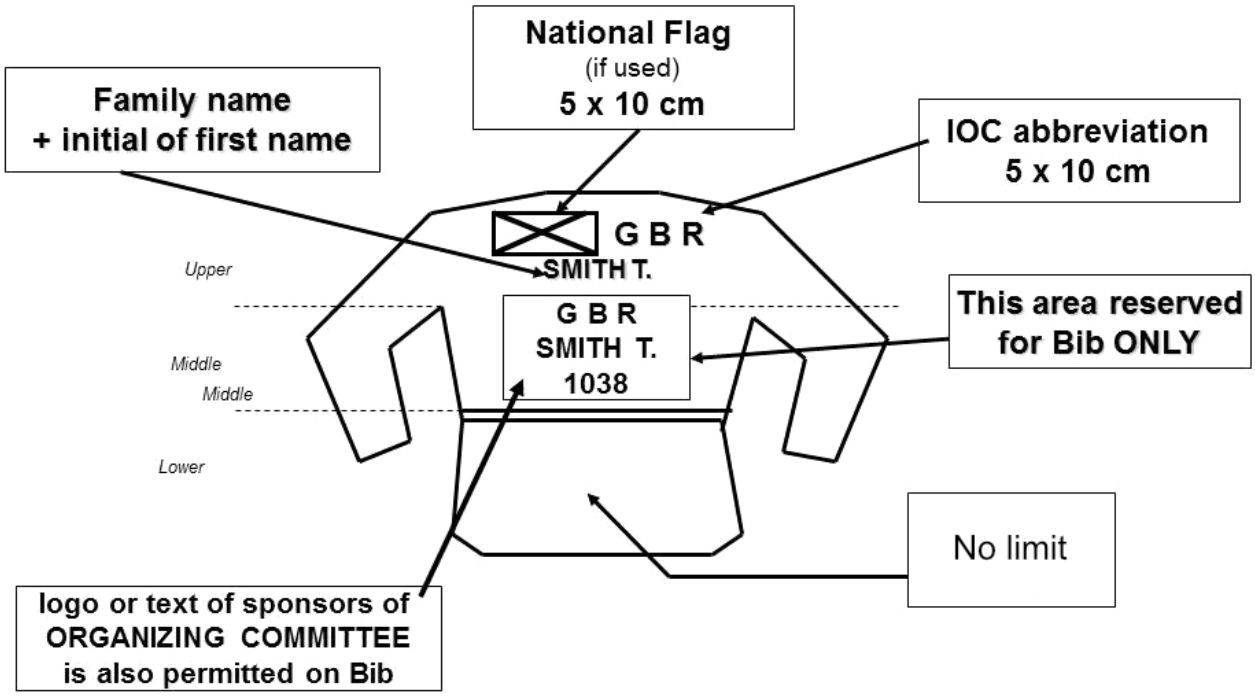

CamScanner

CamScanner

5
ANTI-DOPING RULES

CamScanner

INTRODUCTION 121

ARTICLE 1 DEFINITION OF DOPING 123

ARTICLE 2 ANTI-DOPING RULE VIOLATIONS 123

ARTICLE 3 PROOF OF DOPING 126

ARTICLE 4 THE *PROHIBITED LIST* 127

ARTICLE 5 *TESTING* AND INVESTIGATIONS 131

ARTICLE 6 ANALYSIS OF *SAMPLES* 134

ARTICLE 7 *RESULTS MANAGEMENT*: RESPONSIBILITY, INITIAL REVIEW, NOTICE AND *PROVISIONAL SUSPENSIONS* 136

ARTICLE 8 *RESULTS MANAGEMENT*: RIGHT TO A FAIR HEARING AND NOTICE OF HEARING DECISION 139

ARTICLE 9 AUTOMATIC *DISQUALIFICATION* OF INDIVIDUAL RESULTS 141

ARTICLE 10 SANCTIONS ON INDIVIDUALS 141

ARTICLE 11 *CONSEQUENCES* TO TEAMS 150

ARTICLE 12 SANCTIONS BY ISSF AGAINST OTHER SPORTING BODIES 151

ARTICLE 13 *RESULTS MANAGEMENT*: APPEALS 152

ARTICLE 14 CONFIDENTIALITY AND REPORTING 155

ARTICLE 15 IMPLEMENTATION OF DECISIONS 159

ARTICLE 16 STATUTE OF LIMITATIONS 160

ARTICLE 17 *EDUCATION* 160

ARTICLE 18 ADDITIONAL ROLES AND RESPONSIBILITIES OF *NATIONAL FEDERATIONS* 160

ARTICLE 19 ADDITIONAL Roles and responsibilities OF ISSF 161

ARTICLE 20 ADDITIONAL ROLES AND RESPONSIBILITIES OF *ATHLETES* 162

ARTICLE 21 ADDITIONAL ROLES AND RESPONSIBILITIES OF *ATHLETE SUPPORT PERSONNEL* 162

ARTICLE 22 ADDITIONAL ROLES AND RESPONSIBILITIES OF OTHER *PERSONS* SUBJECT TO THESE ANTI-DOPING RULES 162

ARTICLE 23 INTERPRETATION OF THE *CODE* 163

ARTICLE 24 FINAL PROVISIONS 163

APPENDIX 1 DEFINITIONS 165

CamScanner

INTRODUCTION

Preface

These Anti-Doping Rules are adopted and implemented in accordance with ISSF's responsibilities under the World Anti-Doping Code (*Code*), and in furtherance of ISSF's continuing efforts to eradicate doping in sport.

These Anti-Doping Rules are sport rules governing the conditions under which sport is played. Aimed at enforcing anti-doping rules in a global and harmonized manner, they are distinct in nature from criminal and civil laws. They are not intended to be subject to or limited by any national requirements and legal standards applicable to criminal or civil proceedings, although they are intended to be applied in a manner which respects the principles of proportionality and human rights. When reviewing the facts and the law of a given case, all courts, arbitral tribunals and other adjudicating bodies should be aware of and respect the distinct nature of these Anti-Doping Rules, which implement the *Code*, and the fact that these rules represent the consensus of a broad spectrum of stakeholders around the world as to what is necessary to protect and ensure fair sport.

As provided in the *Code*, ISSF shall be responsible for conducting all aspects of *Doping Control*. Any aspect of *Doping Control* or anti-doping *Education* may be delegated by ISSF to a *Delegated Third Party*, however, ISSF shall require the *Delegated Third Party* to perform such aspects in compliance with the *Code*, *International Standards*, and these Anti-Doping Rules. ISSF may delegate the relevant part of the *Results Management* to the CAS Anti-Doping Division. ISSF shall always remain fully responsible for ensuring that any delegated aspects are performed in compliance with the *Code*.

Terms used in these Anti-Doping Rules that are defined terms from the *Code* are italicized.

Unless otherwise specified, references to Articles are references to Articles of these Anti-Doping Rules.

Fundamental Rationale for the *Code* and ISSF 's Anti-Doping Rules

Anti-doping Programmes are founded on the intrinsic value of sport. This intrinsic value is often referred to as "the spirit of sport": the ethical pursuit of human excellence through the dedicated perfection of each *Athlete's* natural talents.

Anti-doping Programmes seek to protect the health of *Athletes* and to provide the opportunity for *Athletes* to pursue human excellence without the *Use* of *Prohibited Substances* and *Methods*.

Anti-doping Programmes seek to maintain the integrity of sport in terms of respect for rules, other competitors, fair competition, a level playing field, and the value of clean sport to the world.

The spirit of sport is the celebration of the human spirit, body and mind. It is the essence of Olympism and is reflected in the values we find in and through sport, including:

- Health
- Ethics, fair play and honesty
- *Athletes'* rights as set forth in the *Code*
- Excellence in performance
- Character and *Education*
- Fun and joy
- Teamwork

CamScanner

• Dedication and commitment

• Respect for rules and laws

• Respect for self and other *Participants*

• Courage

• Community and solidarity

The spirit of sport is expressed in how we play true.

Doping is fundamentally contrary to the spirit of sport.

The first ISSF Anti-Doping Rules were approved by the ordinary General Assembly of the UIT (ISSF) on October 30, 1982 in Caracas, Venezuela and were modified as needed and required by decisions of the Administrative Council since that time. These Anti-Doping Rules are therefore adopted and implemented in conformity with the ISSF's responsibilities under the *Code* and are a furtherance of the ISSF's continuing efforts of eradicating doping in shooting sport.

Scope of these Anti-Doping Rules

These Anti-Doping Rules shall apply to:

(a) ISSF, including its board members, directors, officers and specified employees and *Delegated Third Parties* and their employees, who are involved in any aspect of *Doping Control*;

(b) each of its *National Federations*, including their board members, directors, officers and specified employees, and *Delegated Third Parties* and their employees, who are involved in any aspect of *Doping Control*;

(c) the following *Athletes*, *Athlete Support Personnel* and other *Persons*:

all *Athletes* and *Athlete Support Personnel* who are members of ISSF, or of any *National Federation*, or of any member or affiliate organization of any *National Federation* (including any clubs, teams, associations, or leagues);

(i) all *Athletes* and *Athlete Support Personnel* who participate in such capacity in *Events*, *Competitions* and other activities organized, convened, authorized or recognized by ISSF , or any *National Federation*, or by any member or affiliate organization of any *National Federation* (including any clubs, teams, associations, or leagues), wherever held;

(ii) any other *Athlete* or *Athlete Support Personnel* or other *Person* who, by virtue of an accreditation, a licence or other contractual arrangement, or otherwise, is subject to the authority of ISSF, or of any *National Federation*, or of any member or affiliate organization of any *National Federation* (including any clubs, teams, associations, or leagues), for purposes of anti-doping; and

(iii) *Athletes* who are not regular members of ISSF or of one of its *National Federations* but who want to be eligible to compete in a particular *International Event*.

Each of the above-mentioned *Persons* is deemed, as a condition of his or her participation or involvement in the sport, to have agreed to and be bound by these Anti-Doping Rules, and to have submitted to the authority of ISSF to enforce these Anti-Doping Rules, including any *Consequences* for the breach thereof, and to the jurisdiction of the hearing panels specified in Article 8 and Article 13 to hear and determine cases and appeals brought under these Anti-Doping Rules.

Within the overall pool of *Athletes* set out above who are bound by and required to comply with these Anti-Doping Rules, the following *Athletes* shall be considered to be

CamScanner

International-Level Athletes for the purposes of these Anti-Doping Rules, and, therefore, the specific provisions in these Anti-Doping Rules applicable to *International-Level Athletes* (e.g., *Testing*, *TUEs*, whereabouts, and *Results Management*) shall apply to such *Athletes*:

- All Athletes who hold an ISSF ID, and,
- All Athletes who have qualified for or intend to compete at an ISSF Event, or a Major Event Organizer's Event.

ARTICLE 1 DEFINITION OF DOPING

Doping is defined as the occurrence of one or more of the anti-doping rule violations set forth in Article 2.1 through Article 2.11 of these Anti-Doping Rules.

ARTICLE 2 ANTI-DOPING RULE VIOLATIONS

The purpose of Article 2 is to specify the circumstances and conduct which constitute anti-doping rule violations. Hearings in doping cases will proceed based on the assertion that one or more of these specific rules have been violated.

Athletes or other *Persons* shall be responsible for knowing what constitutes an anti-doping rule violation and the substances and methods which have been included on the *Prohibited List*.

The following constitute anti-doping rule violations:

2.1 Presence of a *Prohibited Substance* or its *Metabolites* or *Markers* in an *Athlete's Sample*

2.1.1 It is the *Athletes'* personal duty to ensure that no *Prohibited Substance* enters their bodies. *Athletes* are responsible for any *Prohibited Substance* or its *Metabolites* or *Markers* found to be present in their *Samples*. Accordingly, it is not necessary that intent, *Fault*, negligence or knowing *Use* on the *Athlete's* part be demonstrated in order to establish an anti-doping rule violation under Article 2.1.

2.1.2 Sufficient proof of an anti-doping rule violation under Article 2.1 is established by any of the following: presence of a *Prohibited Substance* or its *Metabolites* or *Markers* in the *Athlete's* A *Sample* where the *Athlete* waives analysis of the B *Sample* and the B *Sample* is not analyzed; or, where the *Athlete's* B *Sample* is analyzed and the analysis of the *Athlete's* B *Sample* confirms the presence of the *Prohibited Substance* or its *Metabolites* or *Markers* found in the *Athlete's* A *Sample*; or where the *Athlete's* A or B *Sample* is split into two (2) parts and the analysis of the confirmation part of the split *Sample* confirms the presence of the *Prohibited Substance* or its *Metabolites* or *Markers* found in the first part of the split *Sample* or the *Athlete* waives analysis of the confirmation part of the split *Sample*.

2.1.3 Excepting those substances for which a *Decision Limit* is specifically identified in the *Prohibited List* or a *Technical Document*, the presence of any reported quantity of a *Prohibited Substance* or its *Metabolites* or *Markers* in an *Athlete's Sample* shall constitute an anti-doping rule violation.

2.1.4 As an exception to the general rule of Article 2.1, the *Prohibited List*, *International Standards* or *Technical Documents* may establish special criteria for reporting or the evaluation of certain *Prohibited Substances*.

CamScanner

2.2 *Use* or *Attempted Use* by an *Athlete* of a *Prohibited Substance* or a *Prohibited Method*

2.2.1 It is the *Athletes'* personal duty to ensure that no *Prohibited Substance* enters their bodies and that no *Prohibited Method* is *Used*. Accordingly, it is not necessary that intent, *Fault*, negligence or knowing *Use* on the *Athlete's* part be demonstrated in order to establish an anti-doping rule violation for *Use* of a *Prohibited Substance* or a *Prohibited Method*.

2.2.2 The success or failure of the *Use* or *Attempted Use* of a *Prohibited Substance* or *Prohibited Method* is not material. It is sufficient that the *Prohibited Substance* or *Prohibited Method* was *Used* or *Attempted* to be *Used* for an anti-doping rule violation to be committed.

2.3 Evading, Refusing or Failing to Submit to *Sample* Collection by an *Athlete*

Evading *Sample* collection; or refusing or failing to submit to *Sample* collection without compelling justification after notification by a duly authorized *Person*.

2.4 Whereabouts Failures by an *Athlete*

Any combination of three (3) missed tests and/or filing failures, as defined in the *International Standard* for *Results Management*, within a twelve (12) month period by an *Athlete* in a *Registered Testing Pool.*

2.5 *Tampering* or *Attempted Tampering* with any part of *Doping Control* by an *Athlete* or Other *Person*

2.6 *Possession* of a *Prohibited Substance* or a *Prohibited Method* by an *Athlete* or *Athlete Support Person*

2.6.1 *Possession* by an *Athlete In-Competition* of any *Prohibited Substance* or any *Prohibited Method*, or *Possession* by an *Athlete Out-of-Competition* of any *Prohibited Substance* or any *Prohibited Method* which is prohibited *Out-of-Competition* unless the *Athlete* establishes that the *Possession* is consistent with a *Therapeutic Use Exemption* ("*TUE*") granted in accordance with Article 4.4 or other acceptable justification.

2.6.2 *Possession* by an *Athlete Support Person In-Competition* of any *Prohibited Substance* or any *Prohibited Method*, or *Possession* by an *Athlete Support Person Out-of-Competition* of any *Prohibited Substance* or any *Prohibited Method* which is prohibited *Out-of-Competition* in connection with an *Athlete*, *Competition* or training, unless the *Athlete Support Person* establishes that the *Possession* is consistent with a *TUE* granted to an *Athlete* in accordance with Article 4.4 or other acceptable justification.

2.7 *Trafficking* or *Attempted Trafficking* in any *Prohibited Substance* or *Prohibited Method* by an *Athlete* or Other *Person*

2.8 *Administration* or *Attempted Administration* by an *Athlete* or Other *Person* to any *Athlete In-Competition* of any *Prohibited Substance* or *Prohibited Method*, or *Administration* or *Attempted Administration* to any *Athlete Out-of-Competition* of any *Prohibited Substance* or any *Prohibited Method* that is Prohibited *Out-of-Competition*

2.9 Complicity or *Attempted Complicity* by an *Athlete* or Other *Person*

Assisting, encouraging, aiding, abetting, conspiring, covering up or any other type of intentional complicity or *Attempted* complicity involving an anti-doping

CamScanner

rule violation, *Attempted* anti-doping rule violation or violation of Article 10.14.1 by another *Person*.

2.10 Prohibited Association by an *Athlete* or Other *Person*

2.10.1 Association by an *Athlete* or other *Person* subject to the authority of an *Anti-Doping Organization* in a professional or sport-related capacity with any *Athlete Support Person* who:

2.10.1.1 If subject to the authority of an *Anti-Doping Organization*, is serving a period of *Ineligibility*; or

2.10.1.2 If not subject to the authority of an *Anti-Doping Organization* and where *Ineligibility* has not been addressed in a *Results Management* process pursuant to the *Code*, has been convicted or found in a criminal, disciplinary or professional proceeding to have engaged in conduct which would have constituted a violation of anti-doping rules if *Code*-compliant rules had been applicable to such *Person.* The disqualifying status of such *Person* shall be in force for the longer of six (6) years from the criminal, professional or disciplinary decision or the duration of the criminal, disciplinary or professional sanction imposed; or

2.10.1.3 Is serving as a front or intermediary for an individual described in Article 2.10.1.1 or 2.10.1.2.

2.10.2 To establish a violation of Article 2.10, an *Anti-Doping Organization* must establish that the *Athlete* or other *Person* knew of the *Athlete Support Person*'s disqualifying status.

The burden shall be on the *Athlete* or other *Person* to establish that any association with an *Athlete Support Person* described in Article 2.10.1.1 or 2.10.1.2 is not in a professional or sport-related capacity and/or that such association could not have been reasonably avoided.

Anti-Doping Organizations that are aware of *Athlete Support Personnel* who meet the criteria described in Article 2.10.1.1, 2.10.1.2, or 2.10.1.3 shall submit that information to *WADA*.

2.11 Acts by an *Athlete* or Other *Person* to Discourage or Retaliate Against Reporting to Authorities

Where such conduct does not otherwise constitute a violation of Article 2.5:

2.11.1 Any act which threatens or seeks to intimidate another *Person* with the intent of discouraging the *Person* from the good-faith reporting of information that relates to an alleged anti-doping rule violation or alleged non-compliance with the *Code* to *WADA*, an *Anti-Doping Organization*, law enforcement, regulatory or professional disciplinary body, hearing body or *Person* conducting an investigation for *WADA* or an *Anti-Doping Organization*.

2.11.2 Retaliation against a *Person* who, in good faith, has provided evidence or information that relates to an alleged anti-doping rule violation or alleged non-compliance with the *Code* to *WADA*, an *Anti-Doping Organization*, law enforcement, regulatory or professional disciplinary body, hearing body or *Person* conducting an investigation for *WADA* or an *Anti-Doping Organization*.

For purposes of Article 2.11, retaliation, threatening and intimidation include an act taken against such *Person* either because the act lacks a good faith basis or is a disproportionate response.

CamScanner

ARTICLE 3 PROOF OF DOPING

3.1 Burdens and Standards of Proof

ISSF shall have the burden of establishing that an anti-doping rule violation has occurred. The standard of proof shall be whether ISSF has established an anti-doping rule violation to the comfortable satisfaction of the hearing panel bearing in mind the seriousness of the allegation which is made. This standard of proof in all cases is greater than a mere balance of probability but less than proof beyond a reasonable doubt. Where these Anti-Doping Rules place the burden of proof upon the *Athlete* or other *Person* alleged to have committed an anti-doping rule violation to rebut a presumption or establish specified facts or circumstances, except as provided in Articles 3.2.2 and 3.2.3, the standard of proof shall be by a balance of probability.

3.2 Methods of Establishing Facts and Presumptions

Facts related to anti-doping rule violations may be established by any reliable means, including admissions. The following rules of proof shall be applicable in doping cases:

3.2.1 Analytical methods or *Decision Limits* approved by *WADA* after consultation within the relevant scientific community or which have been the subject of peer review are presumed to be scientifically valid. Any *Athlete* or other *Person* seeking to challenge whether the conditions for such presumption have been met or to rebut this presumption of scientific validity shall, as a condition precedent to any such challenge, first notify *WADA* of the challenge and the basis of the challenge. The initial hearing body, appellate body or *CAS*, on its own initiative, may also inform *WADA* of any such challenge. Within ten (10) days of *WADA's* receipt of such notice and the case file related to such challenge, *WADA* shall also have the right to intervene as a party, appear as amicus curiae or otherwise provide evidence in such proceeding. In cases before *CAS*, at *WADA*'s request, the *CAS* panel shall appoint an appropriate scientific expert to assist the panel in its evaluation of the challenge.

3.2.2 *WADA*-accredited laboratories, and other laboratories approved by *WADA*, are presumed to have conducted *Sample* analysis and custodial procedures in accordance with the *International Standard* for Laboratories. The *Athlete* or other *Person* may rebut this presumption by establishing that a departure from the *International Standard* for Laboratories occurred which could reasonably have caused the *Adverse Analytical Finding*.

If the *Athlete* or other *Person* rebuts the preceding presumption by showing that a departure from the *International Standard* for Laboratories occurred which could reasonably have caused the *Adverse Analytical Finding*, then ISSF shall have the burden to establish that such departure did not cause the *Adverse Analytical Finding*.

3.2.3 Departures from any other *International Standard* or other anti-doping rule or policy set forth in the *Code* or these Anti-Doping Rules shall not invalidate analytical results or other evidence of an anti-doping rule violation, and shall not constitute a defense to an anti-doping rule violation; provided, however, if the *Athlete* or other *Person* establishes that a departure from one of the specific *International Standard* provisions listed below could reasonably have caused an anti-doping rule violation based on an *Adverse Analytical Finding* or whereabouts failure, then ISSF shall have the burden to establish that such departure did not cause the *Adverse Analytical Finding* or the whereabouts failure:

CamScanner

(i) a departure from the *International Standard* for *Testing* and Investigations related to *Sample* collection or *Sample* handling which could reasonably have caused an anti-doping rule violation based on an *Adverse Analytical Finding*, in which case ISSF shall have the burden to establish that such departure did not cause the *Adverse Analytical Finding*;

(ii) a departure from the *International Standard* for *Results Management* or *International Standard* for *Testing* and Investigations related to an *Adverse Passport Finding* which could reasonably have caused an anti-doping rule violation, in which case ISSF shall have the burden to establish that such departure did not cause the anti-doping rule violation;

(iii) a departure from the *International Standard* for *Results Management* related to the requirement to provide notice to the *Athlete* of the B *Sample* opening which could reasonably have caused an anti-doping rule violation based on an *Adverse Analytical Finding*, in which case ISSF shall have the burden to establish that such departure did not cause the *Adverse Analytical Finding*;

(iv) a departure from the *International Standard* for *Results Management* related to *Athlete* notification which could reasonably have caused an anti-doping rule violation based on a whereabouts failure, in which case ISSF shall have the burden to establish that such departure did not cause the whereabouts failure.

3.2.4 The facts established by a decision of a court or professional disciplinary tribunal of competent jurisdiction which is not the subject of a pending appeal shall be irrebuttable evidence against the *Athlete* or other *Person* to whom the decision pertained of those facts unless the *Athlete* or other *Person* establishes that the decision violated principles of natural justice.

3.2.5 The hearing panel in a hearing on an anti-doping rule violation may draw an inference adverse to the *Athlete* or other *Person* who is asserted to have committed an anti-doping rule violation based on the *Athlete's* or other *Person's* refusal, after a request made in a reasonable time in advance of the hearing, to appear at the hearing (either in person or telephonically as directed by the hearing panel) and to answer questions from the hearing panel or ISSF.

ARTICLE 4 THE *PROHIBITED LIST*

4.1 Incorporation of the *Prohibited List*

These Anti-Doping Rules incorporate the *Prohibited List*, which is published and revised by *WADA* as described in Article 4.1 of the *Code*.

Unless provided otherwise in the *Prohibited List* or a revision, the *Prohibited List* and revisions shall go into effect under these Anti-Doping Rules three (3) months after publication by *WADA*, without requiring any further action by ISSF or its *National Federations.* All *Athletes* and other *Persons* shall be bound by the *Prohibited List*, and any revisions thereto, from the date they go into effect, without further formality. It is the responsibility of all *Athletes* and other *Persons* to familiarize themselves with the most up-to-date version of the *Prohibited List* and all revisions thereto.

ISSF shall provide its *National Federations* with the most recent version of the *Prohibited List*. Each *National Federation* shall in turn ensure that its members, and the constituents of its members, are also provided with the most recent version of the *Prohibited List*.

CamScanner

4.2 *Prohibited Substances* and *Prohibited Methods* Identified on the *Prohibited List*

4.2.1 *Prohibited Substances* and *Prohibited Methods*

The *Prohibited List* shall identify those *Prohibited Substances* and *Prohibited Methods* which are prohibited as doping at all times (both *In-Competition* and *Out-of-Competition*) because of their potential to enhance performance in future *Competitions* or their masking potential, and those substances and methods which are prohibited *In-Competition* only. The *Prohibited List* may be expanded by *WADA* for a particular sport. *Prohibited Substance*s and *Prohibited Methods* may be included in the *Prohibited List* by general category (e.g., anabolic agents) or by specific reference to a particular substance or method.

4.2.2 *Specified Substances* or *Specified Methods*

For purposes of the application of Article 10, all *Prohibited Substances* shall be *Specified Substances* except as identified on the *Prohibited List*. No *Prohibited Method* shall be a *Specified Method* unless it is specifically identified as a *Specified Method* on the *Prohibited List*.

4.2.3 *Substances of Abuse*

For purposes of applying Article 10, *Substances of Abuse* shall include those *Prohibited Substances* which are specifically identified as *Substances of Abuse* on the *Prohibited List* because they are frequently abused in society outside of the context of sport.

4.3 *WADA's* Determination of the *Prohibited List*

WADA's determination of the *Prohibited Substances* and *Prohibited Methods* that will be included on the *Prohibited List*, the classification of substances into categories on the *Prohibited List*, the classification of a substance as prohibited at all times or *In-Competition* only, the classification of a substance or method as a *Specified Substance*, *Specified Method* or *Substance of Abuse* is final and shall not be subject to any challenge by an *Athlete* or other *Person* including, but not limited to, any challenge based on an argument that the substance or method was not a masking agent or did not have the potential to enhance performance, represent a health risk or violate the spirit of sport.

4.4 *Therapeutic Use Exemptions* ("*TUEs*")

4.4.1 The presence of a *Prohibited Substance* or its *Metabolites* or *Markers*, and/or the *Use* or *Attempted Use*, *Possession* or *Administration* or *Attempted Administration* of a *Prohibited Substance* or *Prohibited Method*, shall not be considered an anti-doping rule violation if it is consistent with the provisions of a *TUE* granted in accordance with the *International Standard* for *Therapeutic Use Exemptions*.

4.4.2 *TUE* Applications

4.4.2.1 *Athletes* who are not *International-Level Athletes* shall apply to their *National Anti-Doping Organization* for a *TUE*. If the *National Anti-Doping Organization* denies the application, the *Athlete* may appeal exclusively to the national-level appeal body described in Article 13.2.2.

4.4.2.2 *Athletes* who are *International-Level Athletes* shall apply to ISSF for a TUE.

4.4.3 *TUE* Recognition

CamScanner

4.4.3.1 Where the *Athlete* already has a *TUE* granted by their *National Anti-Doping Organization* for the substance or method in question, even if that *TUE* meets the criteria set out in the *International Standard* for *Therapeutic Use Exemptions*, the TUE is not automatically recognized by ISSF for purposes of international-level *Competition*. An *international-level Athlete* must apply to ISSF for a recognition of a *TUE* granted by their *National Anti-Doping Organization* before their next *International-level Competition.*

If ISSF upon receipt considers that the *TUE* does not meet those criteria and so refuses to recognize it, ISSF must notify the *Athlete* and the *Athlete*'s *National Anti-Doping Organization* promptly, with reasons. The *Athlete* or the *National Anti-Doping Organization* shall have twenty-one (21) days from such notification to refer the matter to *WADA* for review in accordance with Article 4.4.7.

If the matter is referred to *WADA* for review, the *TUE* granted by the *National Anti-Doping Organization* remains valid for national-level *Competition* and *Out-of-Competition Testing* (but is not valid for international-level *Competition*) pending *WADA's* decision. If the matter is not referred to *WADA* for review within the twenty-one (21) day deadline, the *Athlete*'s *National Anti-Doping Organization* must determine whether the original *TUE* granted by that *National Anti-Doping Organization* should nevertheless remain valid for national-level *Competition* and *Out-of-Competition Testing* (provided that the *Athlete* ceases to be an *International-Level Athlete* and does not participate in international-level *Competition*). Pending the *National Anti-Doping Organization's* decision, the *TUE* remains valid for national-level *Competition* and *Out-of-Competition Testing* (but is not valid for international-level *Competition*).

4.4.3.2 If ISSF chooses to test an *Athlete* who is not an *International-Level Athlete*, ISSF must recognize a *TUE* granted to that *Athlete* by their *National Anti-Doping Organization* unless the *Athlete* is required to apply for recognition of the *TUE* pursuant to Articles 5.8 and 7.0 of the *International Standard* for *Therapeutic Use Exemptions*.

4.4.4 *TUE* Application Process

4.4.4.1 If the *Athlete* does not already have a *TUE* granted by their *National Anti-Doping Organization* for the substance or method in question, the *Athlete* must apply directly to ISSF.

4.4.4.2 An application to ISSF for grant or recognition of a *TUE* must be made as soon as possible and in all cases before the *Athlete*'s next *International-level Competition,* save where Articles 4.1 or 4.3 of the *International Standard* for *Therapeutic Use Exemptions* apply. The application shall be made in accordance with Article 6 of the *International Standard* for *Therapeutic Use Exemptions* as posted on ISSF 's website.

4.4.4.3 ISSF shall establish a *Therapeutic Use Exemption* Committee ("TUEC") to consider applications for the grant or recognition of *TUEs:*

(a) The TUEC shall consist of a Chair and two (2) other members with experience in the care and treatment of *Athletes* and sound knowledge of clinical, sports and exercise medicine.

(b) Before serving as a member of the TUEC, each member must sign a conflict of interest and confidentiality declaration. The appointed members shall not be employees of ISSF.

CamScanner

(c) When an application to ISSF for the grant or recognition of a *TUE* is made, the Chair of the TUEC shall appoint three (3) members (which may include the Chair) to consider the application.

(d) Before considering a *TUE* application, each member shall disclose to the Chair any circumstances likely to affect their impartiality with respect to the *Athlete* making the application.

4.4.4.4 The TUEC shall promptly evaluate and decide upon the application in accordance with the relevant provisions of the *International Standard* for *Therapeutic Use Exemptions* and usually (i.e., unless exceptional circumstances apply) within no more than twenty-one (21) days of receipt of a complete application. Where the application is made in a reasonable time prior to an *Event*, the TUEC must use its best endeavors to issue its decision before the start of the *Event*.

4.4.4.5 The TUEC decision shall be the final decision of ISSF and may be appealed in accordance with Article 4.4.7. ISSF TUEC decision shall be notified in writing to the *Athlete*, and to *WADA* and other *Anti-Doping Organizations* in accordance with the *International Standard* for *Therapeutic Use Exemptions*. It shall also promptly be reported into *ADAMS*.

4.4.4.6 If ISSF (or the *National Anti-Doping Organization*, where it has agreed to consider the application on behalf of ISSF) denies the *Athlete's* application, it must notify the *Athlete* promptly, with reasons. If ISSF grants the *Athlete's* application, it must notify not only the *Athlete* but also their *National Anti-Doping Organization*. If the *National Anti-Doping Organization* considers that the *TUE* granted by ISSF does not meet the criteria set out in the *International Standard* for *Therapeutic Use Exemptions*, it has twenty-one (21) days from such notification to refer the matter to *WADA* for review in accordance with Article 4.4.7.

If the *National Anti-Doping Organization* refers the matter to *WADA* for review, the *TUE* granted by ISSF remains valid for international-level *Competition* and *Out-of-Competition Testing* (but is not valid for national-level *Competition*) pending *WADA's* decision. If the *National Anti-Doping Organization* does not refer the matter to *WADA* for review, the *TUE* granted by ISSF becomes valid for national-level *Competition* as well when the twenty-one (21) day review deadline expires.

4.4.5 Retroactive *TUE* Applications

If ISSF chooses to collect a *Sample* from an *Athlete* who is not an *International-Level Athlete* or a *National-Level Athlete*, and that *Athlete* is *Using* a *Prohibited Substance* or *Prohibited Method* for therapeutic reasons, ISSF must permit that *Athlete* to apply for a retroactive *TUE*.

4.4.6 Expiration, Withdrawal or Reversal of a *TUE*

4.4.6.1 A *TUE* granted pursuant to these Anti-Doping Rules: (a) shall expire automatically at the end of any term for which it was granted, without the need for any further notice or other formality; (b) will be withdrawn if the *Athlete* does not promptly comply with any requirements or conditions imposed by the TUEC upon grant of the *TUE*; (c) may be withdrawn by the TUEC if it is subsequently determined that the criteria for grant of a *TUE* are not in fact met; or (d) may be reversed on review by *WADA* or on appeal.

4.4.6.2 In such event, the *Athlete* shall not be subject to any *Consequences* based on their *Use* or *Possession* or *Administration* of the *Prohibited Substance* or

CamScanner

Prohibited Method in question in accordance with the *TUE* prior to the effective date of expiry, withdrawal, or reversal of the *TUE*. The review pursuant to Article 5.1.1.1 of the *International Standard* for *Results Management* of an *Adverse Analytical Finding,* reported shortly after the *TUE* expiry, withdrawal or reversal, shall include consideration of whether such finding is consistent with *Use* of the *Prohibited Substance* or *Prohibited Method* prior to that date, in which event no anti-doping rule violation shall be asserted.

4.4.7 Reviews and Appeals of *TUE* Decisions

4.4.7.1 *WADA* must review ISSF's decision not to recognize a *TUE* granted by the *National Anti-Doping Organization* that is referred *to WADA* by the *Athlete* or the *Athlete's National Anti-Doping Organization.* In addition, *WADA* must review ISSF's decision to grant a *TUE* that is referred *to WADA* by the *Athlete's National Anti-Doping Organization*. *WADA* may review any other *TUE* decisions at any time, whether upon request by those affected or on its own initiative.

If the *TUE* decision being reviewed meets the criteria set out in the *International Standard* for *Therapeutic Use Exemptions*, *WADA* will not interfere with it. If the *TUE* decision does not meet those criteria, *WADA* will reverse it.

4.4.7.2 Any *TUE* decision by ISSF (or by a *National Anti-Doping Organization* where it has agreed to consider the application on behalf of ISSF) that is not reviewed by *WADA*, or that is reviewed by *WADA* but is not reversed upon review, may be appealed by the *Athlete* and/or the *Athlete's National Anti-Doping Organization,* exclusively to *CAS*.

4.4.7.3 A decision by *WADA* to reverse a *TUE* decision may be appealed by the *Athlete,* the *National Anti-Doping Organization* and/or ISSF, exclusively to *CAS*.

4.4.7.4 A failure to render a decision within a reasonable time on a properly submitted application for grant/recognition of a *TUE* or for review of a *TUE* decision shall be considered a denial of the application thus triggering the applicable rights of review/appeal.

ARTICLE 5 *TESTING* AND INVESTIGATIONS

5.1 Purpose of *Testing* and Investigations

5.1.1 *Testing* and investigations may be undertaken for any anti-doping purpose. They shall be conducted in conformity with the provisions of the *International Standard* for *Testing* and Investigations [and the specific protocols of ISSF supplementing that *International Standard*].

5.1.2 *Testing* shall be undertaken to obtain analytical evidence as to whether the *Athlete* has violated Article 2.1 (Presence of a *Prohibited Substance* or its *Metabolites* or *Markers* in an *Athlete*'s *Sample*) or Article 2.2 (*Use* or *Attempted Use* by an *Athlete* of a *Prohibited Substance* or a *Prohibited Method*).

5.2 Authority to Test

5.2.1 Subject to the limitations for *Event Testing* set out in Article 5.3, ISSF shall have *In-Competition* and *Out-of-Competition Testing* authority over all *Athletes* specified in the Introduction to these Anti-Doping Rules (Section "Scope of these Anti-Doping Rules").

CamScanner

5.2.2 ISSF may require any *Athlete* over whom it has *Testing* authority (including any *Athlete* serving a period of *Ineligibility*) to provide a *Sample* at any time and at any place.

5.2.3 *WADA* shall have *In-Competition* and *Out-of-Competition Testing* authority as set out in Article 20.7.10 of the *Code*.

5.2.4 If ISSF delegates or contracts any part of *Testing* to a *National Anti-Doping Organization* directly or through a *National Federation*, that *National Anti-Doping Organization* may collect additional *Samples* or direct the laboratory to perform additional types of analysis at the *National Anti-Doping Organization's* expense. If additional *Samples* are collected or additional types of analysis are performed, ISSF shall be notified.

5.3 *Event Testing*

5.3.1 Except as otherwise provided below, only a single organization shall have authority to conduct *Testing* at *Event Venues* during an *Event Period*. At *International Events*, ISSF (or other international organization which is the ruling body for an *Event*) shall have authority to conduct *Testing*. At *National Events*, the *National Anti-Doping Organization* of that country shall have authority to conduct *Testing*. At the request of ISSF (or other international organization which is the ruling body for an *Event*), any *Testing* during the *Event Period* outside of the *Event Venues* shall be coordinated with ISSF (or the relevant ruling body of the *Event*).

5.3.2 If an *Anti-Doping Organization,* which would otherwise have *Testing* authority but is not responsible for initiating and directing *Testing* at an *Event*, desires to conduct *Testing* of *Athletes* at the *Event Venues* during the *Event Period*, the *Anti-Doping Organization* shall first confer with ISSF (or other international organization which is the ruling body of the *Event*) to obtain permission to conduct and coordinate such *Testing*. If the *Anti-Doping Organization* is not satisfied with the response from ISSF (or other international organization which is the ruling body of the *Event*), the *Anti-Doping Organization* may, in accordance with the procedures described in the *International Standard* for *Testing* and Investigations, ask *WADA* for permission to conduct *Testing* and to determine how to coordinate such *Testing*. *WADA* shall not grant approval for such *Testing* before consulting with and informing ISSF (or other international organization which is the ruling body for the *Event*). *WADA's* decision shall be final and not subject to appeal. Unless otherwise provided in the authorization to conduct *Testing*, such tests shall be considered *Out-of-Competition* tests. *Results Management* for any such test shall be the responsibility of the *Anti-Doping Organization* initiating the test unless provided otherwise in the rules of the ruling body of the *Event*.

5.4 *Testing* Requirements

5.4.1 ISSF shall conduct test distribution planning and *Testing* as required by the *International Standard* for *Testing* and Investigations.

5.4.2 Where reasonably feasible, *Testing* shall be coordinated through *ADAMS* in order to maximize the effectiveness of the combined *Testing* effort and to avoid unnecessary repetitive *Testing*

5.5 *Athlete* Whereabouts Information

5.5.1 ISSF has established a *Registered Testing Pool* of those *Athletes* who are required to provide whereabouts information in the manner specified in the *International Standard* for *Testing* and Investigations and who shall be subject

CamScanner

to *Consequences* for Article 2.4 violations as provided in Article 10.3.2. ISSF shall coordinate with *National Anti-Doping Organizations* to identify such *Athletes* and to collect their whereabouts information.

5.5.2 ISSF shall make available through *ADAMS* a list which identifies those *Athletes* included in its *Registered Testing Pool* by name. ISSF shall regularly review and update as necessary its criteria for including *Athletes* in its *Registered Testing Pool*, and shall periodically (but not less than quarterly) review the list of *Athletes* in its *Registered Testing Pool* to ensure that each listed *Athlete* continues to meet the relevant criteria. *Athletes* shall be notified before they are included in the *Registered Testing Pool* and when they are removed from that pool. The notification shall contain the information set out in the *International Standard* for *Testing* and Investigations.

5.5.3 Where an *Athlete* is included in an international *Registered Testing Pool* by ISSF and in a national *Registered Testing Pool* by their *National Anti-Doping Organization*, the *National Anti-Doping Organization* and ISSF shall agree between themselves which of them shall accept that *Athlete's* whereabouts filings; in no case shall an *Athlete* be required to make whereabouts filings to more than one of them.

5.5.4 In accordance with the *International Standard* for *Testing* and Investigations, each *Athlete* in the *Registered Testing Pool* shall do the following: (a) advise ISSF of his/her whereabouts on a quarterly basis; (b) update that information as necessary so that it remains accurate and complete at all times; and (c) make himself or herself available for *Testing* at such whereabouts.

5.5.5 For purposes of Article 2.4, an *Athlete's* failure to comply with the requirements of the *International Standard* for *Testing* and Investigations shall be deemed a filing failure or a missed test, as defined in Annex B of the *International Standard* for *Results Management*, where the conditions set forth in Annex B are met.

5.5.6 An *Athlete* in ISSF's *Registered Testing Pool* shall continue to be subject to the obligation to comply with the whereabouts requirements set in the *International Standard* for *Testing* and Investigations unless and until (a) the *Athlete* gives written notice to ISSF that he or she has retired or (b) ISSF has informed him or her that he or she no longer satisfies the criteria for inclusion in ISSF's *Registered Testing Pool*.

5.5.7 Whereabouts information provided by an *Athlete* while in the *Registered Testing Pool* will be accessible through *ADAMS* to *WADA* and to other *Anti-Doping Organizations* having authority to test that *Athlete* as provided in Article 5.2. Whereabouts information shall be maintained in strict confidence at all times; it shall be used exclusively for purposes of planning, coordinating or conducting *Doping Control*, providing information relevant to the *Athlete Biological Passport* or other analytical results, to support an investigation into a potential anti-doping rule violation, or to support proceedings alleging an anti-doping rule violation; and shall be destroyed after it is no longer relevant for these purposes in accordance with the *International Standard* for the Protection of Privacy and Personal Information.

5.5.8 In accordance with the *International Standard* for *Testing* and Investigations, ISSF may establish a *Testing Pool*, which includes *Athletes* who are subject to less stringent whereabouts requirements than *Athletes* included in ISSF's *Registered Testing Pool*.

CamScanner

5.5.9 ISSF shall notify *Athletes* before they are included in the *Testing Pool* and when they are removed. Such notification shall include the whereabouts requirements and the consequences that apply in case of non-compliance, as indicated in Articles 5.5.10 and 5.5.11.

5.5.10 *Athletes* included in the *Testing Pool* shall provide ISSF with the following whereabouts information so that they may be located and subjected to *Testing:*

(a) An overnight address;

(b) *Competition* / *Event* schedule; and

(c) Regular training activities.

Such whereabouts information shall be filed in *ADAMS* to enable better *Testing* coordination with other *Anti-Doping Organizations*.

5.5.11 An *Athlete's* failure to provide whereabouts information on or before the date required by ISSF or the *Athlete's* failure to provide accurate whereabouts information shall result in ISSF elevating the *Athlete* to ISSF's *Registered Testing Pool*.

5.6 Retired *Athletes* Returning to *Competition*

5.6.1 If an *International-Level Athlete* or *National-Level Athlete* in ISSF's *Registered Testing Pool* retires and then wishes to return to active participation in sport, the *Athlete* shall not compete in *International Event*s or *National Event*s until the *Athlete* has made himself or herself available for *Testing*, by giving six (6) months prior written notice to ISSF and their *National Anti-Doping Organization*.

WADA, in consultation with ISSF and the *Athlete's National Anti-Doping Organization*, may grant an exemption to the six (6) month written notice rule where the strict application of that rule would be unfair to the *Athlete*. This decision may be appealed under Article 13.

Any competitive results obtained in violation of this Article 5.6.1 shall be *Disqualified* unless the *Athlete* can establish that he or she could not have reasonably known that this was an *International Event* or a *National Event*.

5.6.2 If an *Athlete* retires from sport while subject to a period of *Ineligibility*, the *Athlete* must notify the *Anti-Doping Organization* that imposed the period of *Ineligibility* in writing of such retirement. If the *Athlete* then wishes to return to active competition in sport, the *Athlete* shall not compete in *International Events* or *National Events* until the *Athlete* has made himself or herself available for *Testing* by giving six (6) months prior written notice (or notice equivalent to the period of *Ineligibility* remaining as of the date the *Athlete* retired, if that period was longer than six (6) months) to ISSF and to their *National Anti-Doping Organization*.

5.7 *Independent Observer Programme*

ISSF and the organizing committees for ISSF's *Events*, as well as the *National Federations* and the organizing committees for *National Events,* shall authorize and facilitate the *Independent Observer Programme* at *such Events*.

ARTICLE 6 ANALYSIS OF *SAMPLES*

Samples shall be analyzed in accordance with the following principles:

CamScanner

6.1 Use of Accredited, Approved Laboratories and Other Laboratories

6.1.1 For purposes of directly establishing an *Adverse Analytical Finding* under Article 2.1, *Samples* shall be analyzed only in *WADA*-accredited laboratories or laboratories otherwise approved by *WADA*. The choice of the *WADA*-accredited or *WADA*-approved laboratory used for the *Sample* analysis shall be determined exclusively by ISSF.

6.1.2 As provided in Article 3.2, facts related to anti-doping rule violations may be established by any reliable means. This would include, for example, reliable laboratory or other forensic testing conducted outside of *WADA*-accredited or approved laboratories.

6.2 Purpose of Analysis of *Samples* and Data

6.2.1 *Samples* and related analytical data or *Doping Control* information shall be analyzed to detect *Prohibited Substances* and *Prohibited Methods* identified on the *Prohibited List* and other substances as may be directed by *WADA* pursuant to the monitoring Programme described in Article 4.5 of the *Code*, or to assist ISSF in profiling relevant parameters in an *Athlete's* urine, blood or other matrix, including for DNA or genomic profiling, or for any other legitimate anti-doping purpose.

6.3 Research on *Samples* and Data

Samples, related analytical data and *Doping Control* information may be used for anti-doping research purposes, although no *Sample* may be used for research without the *Athlete's* written consent. *Samples* and related analytical data or *Doping Control* information used for research purposes shall first be processed in such a manner as to prevent *Samples* and related analytical data or *Doping Control* information being traced back to a particular *Athlete*. Any research involving *Samples* and related analytical data or *Doping Control* information shall adhere to the principles set out in Article 19 of the *Code*.

6.4 Standards for *Sample* Analysis and Reporting

In accordance with Article 6.4 of the *Code*, ISSF shall ask laboratories to analyze *Samples* in conformity with the *International Standard* for Laboratories and Article 4.7 of the *International Standard* for *Testing* and Investigations.

Laboratories at their own initiative and expense may analyze *Samples* for *Prohibited Substances* or *Prohibited Methods* not included on the standard *Sample* analysis menu, or as requested by ISSF. Results from any such analysis shall be reported to ISSF and have the same validity and *Consequences* as any other analytical result.

6.5 Further Analysis of a *Sample* Prior to or During *Results Management* or Hearing Process

There shall be no limitation on the authority of a laboratory to conduct repeat or additional analysis on a *Sample* prior to the time ISSF notifies an *Athlete* that the *Sample* is the basis for an Article 2.1 anti-doping rule violation charge. If after such notification ISSF wishes to conduct additional analysis on that *Sample*, it may do so with the consent of the *Athlete* or approval from a hearing body.

6.6 Further Analysis of a *Sample* After it has been Reported as Negative or has Otherwise not Resulted in an Anti-Doping Rule Violation Charge

After a laboratory has reported a *Sample* as negative, or the *Sample* has not otherwise resulted in an anti-doping rule violation charge, it may be

CamScanner

stored and subjected to further analyses for the purpose of Article 6.2 at any time exclusively at the direction of either the *Anti-Doping Organization* that initiated and directed *Sample* collection or *WADA*. Any other *Anti-Doping Organization* with authority to test the *Athlete* that wishes to conduct further analysis on a stored *Sample* may do so with the permission of the *Anti-Doping Organization* that initiated and directed *Sample* collection or *WADA*, and shall be responsible for any follow-up *Results Management*. Any *Sample* storage or further analysis initiated by *WADA* or another *Anti-Doping Organization* shall be at *WADA*'s or that organization's expense. Further analysis of *Samples* shall conform with the requirements of the *International Standard* for Laboratories.

6.7 Split of A or B *Sample*

Where *WADA*, an *Anti-Doping Organization* with *Results Management* authority, and/or a *WADA*-accredited laboratory (with approval from *WADA* or the *Anti-Doping Organization* with *Results Management* authority) wishes to split an A or B *Sample* for the purpose of using the first part of the split *Sample* for an A *Sample* analysis and the second part of the split *Sample* for confirmation, then the procedures set forth in the *International Standard* for Laboratories shall be followed.

6.8 *WADA*'s Right to Take Possession of *Samples* and Data

WADA may, in its sole discretion at any time, with or without prior notice, take physical possession of any *Sample* and related analytical data or information in the possession of a laboratory or *Anti-Doping Organization*. Upon request by *WADA*, the laboratory or *Anti-Doping Organization* in possession of the *Sample* shall immediately grant access to and enable *WADA* to take physical possession of the *Sample*. If *WADA* has not provided prior notice to the laboratory or *Anti-Doping Organization* before taking possession of a *Sample*, it shall provide such notice to the laboratory and each *Anti-Doping Organization* whose *Samples* have been taken by *WADA* within a reasonable time after taking possession. After analysis and any investigation of a seized *Sample*, *WADA* may direct another *Anti-Doping Organization* with authority to test the *Athlete* to assume *Results Management* responsibility for the *Sample* if a potential anti-doping rule violation is discovered.

ARTICLE 7 *RESULTS MANAGEMENT*: RESPONSIBILITY, INITIAL REVIEW, NOTICE AND *PROVISIONAL SUSPENSIONS*

Results Management under these Anti-Doping Rules establishes a process designed to resolve anti-doping rule violation matters in a fair, expeditious and efficient manner.

7.1 Responsibility for Conducting *Results Management*

7.1.1 Except as otherwise provided in Articles 6.6, 6.8 and *Code* Article 7.1, *Results Management* shall be the responsibility of, and shall be governed by, the procedural rules of the *Anti-Doping Organization* that initiated and directed *Sample* collection (or, if no *Sample* collection is involved, the *Anti-Doping Organization* which first provides notice to an *Athlete* or other Person of a potential anti-doping rule violation and then diligently pursues that anti-doping rule violation).

7.1.2 In circumstances where the rules of a *National Anti-Doping Organization* do not give the *National Anti-Doping Organization* authority over an *Athlete* or other *Person* who is not a national, resident, license holder, or member of a sport organization of that country, or the *National Anti-Doping Organization* declines

CamScanner

to exercise such authority, *Results Management* shall be conducted by the applicable International Federation or by a third party with authority over the *Athlete* or other *Person* as directed by the rules of the applicable International Federation.

7.1.3 In the event the *Major Event Organization* assumes only limited *Results Management* responsibility relating to a *Sample* initiated and taken during an *Event* conducted by a *Major Event Organization*, or an anti-doping rule violation occurring during such *Event*, the case shall be referred by the *Major Event Organization* to the applicable International Federation for completion of *Results Management*.

7.1.4 *Results Management* in relation to a potential whereabouts failure (a filing failure or a missed test) shall be administered by ISSF or the *National Anti-Doping Organization* with whom the *Athlete* in question files whereabouts information, as provided in the *International Standard* for *Results Management*. If ISSF determines a filing failure or a missed test, it shall submit that information to *WADA* through *ADAMS*, where it will be made available to other relevant *Anti-Doping Organizations*.

7.1.5 Other circumstances in which ISSF shall take responsibility for conducting *Results Management* in respect of anti-doping rule violations involving *Athletes* and other *Persons* under its authority shall be determined by reference to and in accordance with Article 7 of the *Code*.

7.1.6 *WADA* may direct ISSF to conduct *Results Management* in particular circumstances. If ISSF refuses to conduct *Results Management* within a reasonable deadline set by *WADA*, such refusal shall be considered an act of non-compliance, and *WADA* may direct another *Anti-Doping Organization* with authority over the *Athlete* or other *Person*, that is willing to do so, to take *Results Management* responsibility in place of ISSF or, if there is no such *Anti-Doping Organization*, any other *Anti-Doping Organization* that is willing to do so. In such case, ISSF shall reimburse the costs and attorney's fees of conducting *Results Management* to the other *Anti-Doping Organization* designated by *WADA,* and a failure to reimburse costs and attorney's fees shall be considered an act of non-compliance.

7.2 Review and Notification Regarding Potential Anti-Doping Rule Violations

ISSF shall carry out the review and notification with respect to any potential anti-doping rule violation in accordance with the *International Standard* for *Results Management*.

7.3 Identification of Prior Anti-Doping Rule Violations

Before giving an *Athlete* or other *Person* notice of a potential anti-doping rule violation as provided above, ISSF shall refer to *ADAMS* and contact *WADA* and other relevant *Anti-Doping Organizations* to determine whether any prior anti-doping rule violation exists.

7.4 Provisional Suspensions

7.4.1 Mandatory *Provisional Suspension* after an *Adverse Analytical Finding* or *Adverse Passport Finding*

If ISSF receives an *Adverse Analytical Finding* or an *Adverse Passport Finding* (upon completion of the *Adverse Passport Finding* review process) for a *Prohibited Substance* or a *Prohibited Method* that is not a *Specified Substance* or a *Specified Method*, it shall impose a *Provisional Suspension* on the *Athlete* promptly upon or after the review and notification required by Article 7.2.

CamScanner

A mandatory *Provisional Suspension* may be eliminated if: (i) the *Athlete* demonstrates to the CAS Anti-Doping Division ("CAS ADD") that the violation is likely to have involved a *Contaminated Product,* or (ii) the violation involves a *Substance of Abuse* and the *Athlete* establishes entitlement to a reduced period of *Ineligibility* under Article 10.2.4.1.

The CAS ADD's decision not to eliminate a mandatory *Provisional Suspension* on account of the *Athlete's* assertion regarding a *Contaminated Product* shall not be appealable.

7.4.2 Optional *Provisional Suspension* Based on an *Adverse Analytical Finding* for *Specified Substances*, *Specified Methods, Contaminated Products*, or Other Anti-Doping Rule Violations

ISSF may impose a *Provisional Suspension* for anti-doping rule violations not covered by Article 7.4.1 prior to the analysis of the *Athlete's* B *Sample* or final hearing as described in Article 8.

An optional *Provisional Suspension* may be lifted at the discretion of ISSF at any time prior to the CAS ADD's decision under Article 8, unless provided otherwise in the *International Standard* for *Results Management*.

7.4.3 Opportunity for Hearing or Appeal

Notwithstanding Articles 7.4.1 and 7.4.2, a *Provisional Suspension* may not be imposed unless the *Athlete* or other *Person* is given: (a) an opportunity for a *Provisional Hearing*, either before or on a timely basis after imposition of the *Provisional Suspension*; or (b) an opportunity for an expedited hearing in accordance with Article 8 on a timely basis after imposition of the *Provisional Suspension.*

The imposition of a *Provisional Suspension*, or the decision not to impose a *Provisional Suspension,* may be appealed in an expedited process in accordance with Article 13.2.

7.4.4 Voluntary Acceptance of *Provisional Suspension*

Athletes on their own initiative may voluntarily accept a *Provisional Suspension* if done so prior to the later of: (i) the expiration of ten (10) days from the report of the B *Sample* (or waiver of the B *Sample*) or ten (10) days from the notice of any other anti-doping rule violation, or (ii) the date on which the *Athlete* first competes after such report or notice.

Other *Persons* on their own initiative may voluntarily accept a *Provisional Suspension* if done so within ten (10) days from the notice of the anti-doping rule violation.

Upon such voluntary acceptance, the *Provisional Suspension* shall have the full effect and be treated in the same manner as if the *Provisional Suspension* had been imposed under Article 7.4.1 or 7.4.2; provided, however, at any time after voluntarily accepting a *Provisional Suspension*, the *Athlete* or other *Person* may withdraw such acceptance, in which event the *Athlete* or other *Person* shall not receive any credit for time previously served during the *Provisional Suspension*.

7.4.5 If a *Provisional Suspension* is imposed based on an A *Sample Adverse Analytical Finding* and a subsequent B *Sample* analysis (if requested by the *Athlete* or ISSF) does not confirm the A *Sample* analysis, then the *Athlete* shall not be subject to any further *Provisional Suspension* on account of a violation of Article 2.1. In circumstances where the *Athlete* or the *Athlete's* team has

CamScanner

been removed from an *Event* based on a violation of Article 2.1 and the subsequent B *Sample* analysis does not confirm the A *Sample* finding, then, if it is still possible for the *Athlete* or team to be reinserted, without otherwise affecting the *Event*, the *Athlete* or team may continue to take part in the *Event*.

7.5 *Results Management* Decisions

Results Management decisions or adjudications by ISSF must not purport to be limited to a particular geographic area or the ISSF's sport and shall address and determine without limitation the following issues: (i) whether an anti-doping rule violation was committed or a *Provisional Suspension* should be imposed, the factual basis for such determination, and the specific Articles that have been violated, and (ii) all *Consequences* flowing from the anti-doping rule violation(s), including applicable *Disqualifications* under Articles 9 and 10.10, any forfeiture of medals or prizes, any period of *Ineligibility* (and the date it begins to run) and any *Financial Consequences*.

7.6 Notification of *Results Management* Decisions

ISSF shall notify *Athletes*, other *Persons*, *Signatories* and *WADA* of *Results Management* decisions as provided in Article 14.2 and in the *International Standard* for *Results Management*.

7.7 Retirement from Sport

If an *Athlete* or other *Person* retires while the ISSF's *Results Management* process is underway, ISSF retains authority to complete its *Results Management* process. If an *Athlete* or other *Person* retires before any *Results Management* process has begun, and ISSF would have had *Results Management* authority over the *Athlete* or other *Person* at the time the *Athlete* or other *Person* committed an anti-doping rule violation, ISSF has authority to conduct *Results Management*.

ARTICLE 8 *RESULTS MANAGEMENT*: RIGHT TO A FAIR HEARING AND NOTICE OF HEARING DECISION

For any *Person* who is asserted to have committed an anti-doping rule violation, ISSF shall provide a fair hearing within a reasonable time by a fair, impartial and *Operationally Independent* hearing panel in compliance with the *Code* and the *International Standard* for *Results Management*.

8.1 Fair Hearings

8.1.1 Fair, Impartial and *Operationally Independent* Hearing Panel

8.1.1.1 ISSF has delegated its Article 8 responsibilities with regards to first instance hearings and decisions to the CAS ADD, which has jurisdiction to hear and determine whether an *Athlete* or other *Person*, subject to these Anti-Doping Rules, has committed an anti-doping rule violation and, if applicable, to impose relevant *Consequences*. The procedural rules of CAS ADD pertaining to the hearing of first instance shall apply.

8.1.1.2 The CAS ADD will always ensure that the *Athlete* or other

Person is provided with a fair hearing within a reasonable time by a fair, impartial and *Operationally Independent* hearing panel in compliance with the *Code* and the *International Standard* for *Results Management*.

8.1.2 Hearing Process

CamScanner

8.1.2.1 When ISSF sends a notice to an *Athlete* or other *Person* notifying them of a potential anti-doping rule violation, and the *Athlete* or other *Person* does not waive a hearing in accordance with Article 8.3.1 or Article 8.3.2, then the case shall be referred to the CAS ADD for hearing and adjudication, which shall be conducted in accordance with the principles described in Articles 8 and 9 of the *International Standard* for *Results Management*.

8.1.2.2 Hearings held in connection with *Events* in respect to *Athletes* and other *Persons* who are subject to these Anti-Doping Rules may be conducted by an expedited process where permitted by the CAS ADD.

8.1.2.3 *WADA,* the *National Federation* and the *National Anti-Doping Organization* of the *Athlete* or other *Person* may attend the hearing as observers. In any event, ISSF shall keep them fully apprised as to the status of pending cases and the result of all hearings.

8.2 Notice of Decisions

8.2.1 At the end of the hearing, or promptly thereafter, the CAS ADD shall issue a written decision that conforms with Article 9 of the *International Standard* for *Results Management* and which includes the full reasons for the decision, the period of *Ineligibility* imposed, the *Disqualification* of results under Article 10.10 and, if applicable, a justification for why the greatest potential *Consequences* were not imposed.

8.2.2 ISSF shall notify that decision to the *Athlete* or other *Person* and to other *Anti-Doping Organizations* with a right to appeal under Article 13.2.3 and shall promptly report it into *ADAMS*. The decision may be appealed as provided in Article 13.

8.3 Waiver of Hearing

8.3.1 An *Athlete* or other *Person* against whom an anti-doping violation is asserted may admit that violation at any time, waive a hearing and accept the *Consequences* proposed by ISSF and may, if applicable, benefit from a *Results Management* agreement under the conditions set out in Article 10.8.

8.3.2 However, if the *Athlete* or other *Person* against whom an anti-doping rule violation is asserted fails to dispute that assertion within the deadline specified in the notice sent by the ISSF asserting the violation, then they shall be deemed to have admitted the violation, to have waived a hearing, and to have accepted the proposed *Consequences*.

8.3.3 In cases where Article 8.3.1 or 8.3.2 applies, a hearing before the CAS ADD shall not be required. Instead ISSF shall promptly issue a written decision that conforms with Article 9 of the *International Standard* for *Results Management* and which includes the full reasons for the decision, the period of *Ineligibility* imposed, the *Disqualification* of results under Article 10.10 and, if applicable, a justification for why the greatest potential *Consequences* were not imposed.

8.3.4 ISSF shall notify that decision to the *Athlete* or other *Person* and to other *Anti-Doping Organizations* with a right to appeal under Article 13.2.3 and shall promptly report it into *ADAMS*. ISSF shall *Publicly Disclose* that decision in accordance with Article 14.3.2.

8.4 Single Hearing Before *CAS*

Anti-doping rule violations asserted against *International-Level Athletes*, *National-Level Athletes* or other *Persons* may, with the consent of the *Athlete* or other *Person*, ISSF (where it has *Results Management* responsibility in

CamScanner

accordance with Article 7) and *WADA*, be heard in a single hearing directly at *CAS*.

ARTICLE 9 AUTOMATIC *DISQUALIFICATION* OF INDIVIDUAL RESULTS

An anti-doping rule violation in *Individual Sports* in connection with an *In-Competition* test automatically leads to *Disqualification* of the result obtained in that *Competition* with all resulting *Consequences*, including forfeiture of any medals, points and prizes.

ARTICLE 10 SANCTIONS ON INDIVIDUALS

10.1 *Disqualification* of Results in the *Event* during which an Anti-Doping Rule Violation Occurs

10.1.1 An anti-doping rule violation occurring during or in connection with an *Event* may, upon the decision of the ruling body of the *Event*, lead to *Disqualification* of all of the *Athlete's* individual results obtained in that *Event* with all *Consequences*, including forfeiture of all medals, points and prizes, except as provided in Article 10.1.2.

Factors to be included in considering whether to *Disqualify* other results in an *Event* might include, for example, the seriousness of the *Athlete's* anti-doping rule violation and whether the *Athlete* tested negative in the other *Competitions*.

10.1.2 If the *Athlete* establishes that he or she bears *No Fault* or *Negligence* for the violation, the *Athlete's* individual results in the other *Competitions* shall not be *Disqualified*, unless the *Athlete's* results in *Competitions* other than the *Competition* in which the anti-doping rule violation occurred were likely to have been affected by the *Athlete's* anti-doping rule violation.

10.2 *Ineligibility* for Presence, *Use* or *Attempted Use*, or *Possession* of a *Prohibited Substance* or *Prohibited Method*

The period of *Ineligibility* for a violation of Article 2.1, 2.2 or 2.6 shall be as follows, subject to potential reduction or suspension pursuant to Article 10.5, 10.6 or 10.7:

10.2.1 The period of *Ineligibility*, subject to Article 10.2.4, shall be four (4) years where:

10.2.1.1 The anti-doping rule violation does not involve a *Specified Substance* or a *Specified Method*, unless the *Athlete* or other *Person* can establish that the anti-doping rule violation was not intentional.

10.2.1.2 The anti-doping rule violation involves a *Specified Substance* or a *Specified Method* and ISSF can establish that the anti-doping rule violation was intentional.

10.2.2 If Article 10.2.1 does not apply, subject to Article 10.2.4.1, the period of *Ineligibility* shall be two (2) years.

10.2.3 As used in Article 10.2, the term "intentional" is meant to identify those *Athletes* or other *Persons* who engage in conduct which they knew constituted an anti-doping rule violation or knew that there was a significant risk that the conduct might constitute or result in an anti-doping rule violation and manifestly disregarded that risk. An anti-doping rule violation resulting from an *Adverse Analytical Finding* for a substance which is only prohibited *In-Competition* shall be rebuttably presumed to be not "intentional" if the substance is a *Specified*

CamScanner

Substance and the *Athlete* can establish that the *Prohibited Substance* was *Used Out-of-Competition*. An anti-doping rule violation resulting from an *Adverse Analytical Finding* for a substance which is only prohibited *In-Competition* shall not be considered "intentional" if the substance is not a *Specified Substance* and the *Athlete* can establish that the *Prohibited Substance* was *Used Out-of-Competition* in a context unrelated to sport performance.

10.2.4 Notwithstanding any other provision in Article 10.2, where the anti-doping rule violation involves a *Substance of Abuse*:

10.2.4.1 If the *Athlete* can establish that any ingestion or *Use* occurred *Out-of-Competition* and was unrelated to sport performance, then the period of *Ineligibility* shall be three (3) months *Ineligibility*.

In addition, the period of *Ineligibility* calculated under this Article 10.2.4.1 may be reduced to one (1) month if the *Athlete* or other *Person* satisfactorily completes a *Substance of Abuse* treatment Programme approved by ISSF. The period of *Ineligibility* established in this Article 10.2.4.1 is not subject to any reduction based on any provision in Article 10.6.

10.2.4.2 If the ingestion, *Use* or *Possession* occurred *In-Competition*, and the *Athlete* can establish that the context of the ingestion, *Use* or *Possession* was unrelated to sport performance, then the ingestion, *Use* or *Possession* shall not be considered intentional for purposes of Article 10.2.1 and shall not provide a basis for a finding of *Aggravating Circumstances* under Article 10.4.

10.3 *Ineligibility* for Other Anti-Doping Rule Violations

The period of *Ineligibility* for anti-doping rule violations other than as provided in Article 10.2 shall be as follows, unless Article 10.6 or 10.7 are applicable:

10.3.1 For violations of Article 2.3 or 2.5, the period of *Ineligibility* shall be four (4) years except: (i) in the case of failing to submit to *Sample* collection, if the *Athlete* can establish that the commission of the anti-doping rule violation was not intentional, the period of *Ineligibility* shall be two (2) years; (ii) in all other cases, if the *Athlete* or other *Person* can establish exceptional circumstances that justify a reduction of the period of *Ineligibility*, the period of *Ineligibility* shall be in a range from two (2) years to four (4) years depending on the *Athlete* or other *Person*'s degree of *Fault*; or (iii) in a case involving a *Protected Person* or *Recreational Athlete*, the period of *Ineligibility* shall be in a range between a maximum of two (2) years and, at a minimum, a reprimand and no period of *Ineligibility*, depending on the *Protected Person* or *Recreational Athlete*'s degree of *Fault*.

10.3.2 For violations of Article 2.4, the period of *Ineligibility* shall be two (2) years, subject to reduction down to a minimum of one (1) year, depending on the *Athlete's* degree of *Fault*. The flexibility between two (2) years and one (1) year of *Ineligibility* in this Article is not available to *Athletes* where a pattern of last-minute whereabouts changes or other conduct raises a serious suspicion that the *Athlete* was trying to avoid being available for *Testing*.

10.3.3 For violations of Article 2.7 or 2.8, the period of *Ineligibility* shall be a minimum of four (4) years up to lifetime *Ineligibility*, depending on the seriousness of the violation. An Article 2.7 or Article 2.8 violation involving a *Protected Person* shall be considered a particularly serious violation and, if committed by *Athlete Support Personnel* for violations other than for *Specified Substances*, shall result in lifetime *Ineligibility* for *Athlete Support Personnel*. In addition, significant violations of Article 2.7 or 2.8 which may also violate non-sporting

CamScanner

laws and regulations, shall be reported to the competent administrative, professional or judicial authorities.

10.3.4 For violations of Article 2.9, the period of *Ineligibility* imposed shall be a minimum of two (2) years, up to lifetime *Ineligibility*, depending on the seriousness of the violation.

10.3.5 For violations of Article 2.10, the period of *Ineligibility* shall be two (2) years, subject to reduction down to a minimum of one (1) year, depending on the *Athlete* or other *Person's* degree of *Fault* and other circumstances of the case.

10.3.6 For violations of Article 2.11, the period of *Ineligibility* shall be a minimum of two (2) years, up to lifetime *Ineligibility*, depending on the seriousness of the violation by the *Athlete* or other *Person*.

10.4 *Aggravating Circumstances* which may Increase the Period of *Ineligibility*

If ISSF establishes in an individual case involving an anti-doping rule violation other than violations under Article 2.7 (*Trafficking* or *Attempted Trafficking*), 2.8 (*Administration* or *Attempted Administration*), 2.9 (Complicity) or 2.11 (Acts by an *Athlete* or Other *Person* to Discourage or Retaliate Against Reporting) that *Aggravating Circumstances* are present which justify the imposition of a period of *Ineligibility* greater than the standard sanction, then the period of *Ineligibility* otherwise applicable shall be increased by an additional period of *Ineligibility* of up to two (2) years depending on the seriousness of the violation and the nature of the *Aggravating Circumstances*, unless the *Athlete* or other *Person* can establish that he or she did not knowingly commit the anti-doping rule violation.

10.5 Elimination of the Period of *Ineligibility* where there is *No Fault* or *Negligence*

If an *Athlete* or other *Person* establishes in an individual case that he or she bears *No Fault* or *Negligence*, then the otherwise applicable period of *Ineligibility* shall be eliminated.

10.6 Reduction of the Period of *Ineligibility* based on *No Significant Fault* or *Negligence*

10.6.1 Reduction of Sanctions in Particular Circumstances for Violations of Article 2.1, 2.2 or 2.6.

All reductions under Article 10.6.1 are mutually exclusive and not cumulative.

10.6.1.1 *Specified Substances* or *Specified Methods*

Where the anti-doping rule violation involves a *Specified Substance* (other than a *Substance of Abuse*) or *Specified Method*, and the *Athlete* or other *Person* can establish *No Significant Fault* or *Negligence*, then the period of *Ineligibility* shall be, at a minimum, a reprimand and no period of *Ineligibility*, and at a maximum, two (2) years of *Ineligibility*, depending on the *Athlete's* or other *Person's* degree of *Fault*.

10.6.1.2 *Contaminated Products*

In cases where the *Athlete* or other *Person* can establish both *No Significant Fault* or *Negligence* and that the detected *Prohibited Substance* (other than a *Substance of Abuse*) came from a *Contaminated Product*, then the period of *Ineligibility* shall be, at a minimum, a reprimand and no period of *Ineligibility*, and at a maximum, two (2) years *Ineligibility*, depending on the *Athlete* or other *Person's* degree of *Fault*.

CamScanner

10.6.1.3 *Protected Persons* or *Recreational Athletes*

Where the anti-doping rule violation not involving a *Substance of Abuse* is committed by a *Protected Person* or *Recreational Athlete*, and the *Protected Person* or *Recreational Athlete* can establish *No Significant Fault* or *Negligence*, then the period of *Ineligibility* shall be, at a minimum, a reprimand and no period of *Ineligibility*, and at a maximum, two (2) years *Ineligibility*, depending on the *Protected Person* or *Recreational Athlete*'s degree of *Fault*.

10.6.2 Application of *No Significant Fault* or *Negligence* beyond the Application of Article 10.6.1

If an *Athlete* or other *Person* establishes in an individual case where Article 10.6.1 is not applicable that he or she bears *No Significant Fault* or *Negligence*, then, subject to further reduction or elimination as provided in Article 10.7, the otherwise applicable period of *Ineligibility* may be reduced based on the *Athlete* or other *Person's* degree of *Fault*, but the reduced period of *Ineligibility* may not be less than one-half of the period of *Ineligibility* otherwise applicable. If the otherwise applicable period of *Ineligibility* is a lifetime, the reduced period under this Article may be no less than eight (8) years.

10.7 Elimination, Reduction, or Suspension of Period of *Ineligibility* or other *Consequences* for Reasons other than *Fault*

10.7.1 *Substantial Assistance* in Discovering or Establishing *Code* Violations

10.7.1.1 ISSF may, prior to an appellate decision under Article 13 or the expiration of the time to appeal, suspend a part of the *Consequences* (other than *Disqualification* and mandatory *Public Disclosure*) imposed in an individual case where the *Athlete* or other *Person* has provided *Substantial Assistance* to an *Anti-Doping Organization*, criminal authority or professional disciplinary body which results in: (i) the *Anti-Doping Organization* discovering or bringing forward an anti-doping rule violation by another *Person*; or (ii) which results in a criminal or disciplinary body discovering or bringing forward a criminal offense or the breach of professional rules committed by another *Person* and the information provided by the *Person* providing *Substantial Assistance* is made available to ISSF or other *Anti-Doping Organization* with *Results Management* responsibility; or (iii) which results in *WADA* initiating a proceeding against a *Signatory*, *WADA*-accredited laboratory, or *Athlete* passport management unit (as defined in the *International Standard* for *Testing* and Investigations) for non-compliance with the *Code*, *International Standard* or *Technical Document*; or (iv) with the approval by *WADA*, which results in a criminal or disciplinary body bringing forward a criminal offense or the breach of professional or sport rules arising out of a sport integrity violation other than doping.

After an appellate decision under Article 13 or the expiration of time to appeal, ISSF may only suspend a part of the otherwise applicable *Consequences* with the approval of *WADA*.

The extent to which the otherwise applicable period of *Ineligibility* may be suspended shall be based on the seriousness of the anti-doping rule violation committed by the *Athlete* or other *Person* and the significance of the *Substantial Assistance* provided by the *Athlete* or other *Person* to the effort to eliminate doping in sport, non-compliance with the *Code* and/or sport integrity violations. No more than three-quarters of the otherwise applicable period of *Ineligibility* may be suspended. If the otherwise applicable period of *Ineligibility*

CamScanner

is a lifetime, the non-suspended period under this Article must be no less than eight (8) years. For purposes of this paragraph, the otherwise applicable period of *Ineligibility* shall not include any period of *Ineligibility* that could be added under Article 10.9.3.2 of these Anti-Doping Rules.

If requested by an *Athlete* or other *Person* who seeks to provide *Substantial Assistance*, ISSF shall allow the *Athlete* or other *Person* to provide the information to it subject to a *Without Prejudice Agreement*.

If the *Athlete* or other *Person* fails to continue to cooperate and to provide the complete and credible *Substantial Assistance* upon which a suspension of *Consequences* was based, ISSF shall reinstate the original *Consequences*. If ISSF decides to reinstate suspended *Consequences* or decides not to reinstate suspended *Consequences*, that decision may be appealed by any *Person* entitled to appeal under Article 13.

10.7.1.2 To further encourage *Athletes* and other *Persons* to provide *Substantial Assistance* to *Anti-Doping Organizations*, at the request of ISSF or at the request of the *Athlete* or other *Person* who has, or has been asserted to have, committed an anti-doping rule violation, or other violation of the *Code*, *WADA* may agree at any stage of the *Results Management* process, including after an appellate decision under Article 13, to what it considers to be an appropriate suspension of the otherwise-applicable period of *Ineligibility* and other *Consequences*. In exceptional circumstances, *WADA* may agree to suspensions of the period of *Ineligibility* and other *Consequences* for *Substantial Assistance* greater than those otherwise provided in this Article, or even no period of *Ineligibility*, no mandatory *Public Disclosure* and/or no return of prize money or payment of fines or costs. *WADA's* approval shall be subject to reinstatement of *Consequences*, as otherwise provided in this Article. Notwithstanding Article 13, *WADA's* decisions in the context of this Article 10.7.1.2 may not be appealed.

10.7.1.3 If ISSF suspends any part of an otherwise applicable sanction because of *Substantial Assistance*, then notice providing justification for the decision shall be provided to the other *Anti-Doping Organizations* with a right to appeal under Article 13.2.3 as provided in Article 14.2. In unique circumstances where *WADA* determines that it would be in the best interest of anti-doping, *WADA* may authorize ISSF to enter into appropriate confidentiality agreements limiting or delaying the disclosure of the *Substantial Assistance* agreement or the nature of *Substantial Assistance* being provided.

10.7.2 Admission of an Anti-Doping Rule Violation in the Absence of Other Evidence

Where an *Athlete* or other *Person* voluntarily admits the commission of an anti-doping rule violation before having received notice of a *Sample* collection which could establish an anti-doping rule violation (or, in the case of an anti-doping rule violation other than Article 2.1, before receiving first notice of the admitted violation pursuant to Article 7) and that admission is the only reliable evidence of the violation at the time of admission, then the period of *Ineligibility* may be reduced, but not below one-half of the period of *Ineligibility* otherwise applicable.

10.7.3 Application of Multiple Grounds for Reduction of a Sanction

Where an *Athlete* or other *Person* establishes entitlement to reduction in sanction under more than one provision of Article 10.5, 10.6 or 10.7, before applying any reduction or suspension under Article 10.7, the otherwise applicable period of *Ineligibility* shall be determined in accordance with

CamScanner

Articles 10.2, 10.3, 10.5, and 10.6. If the *Athlete* or other *Person* establishes entitlement to a reduction or suspension of the period of *Ineligibility* under Article 10.7, then the period of *Ineligibility* may be reduced or suspended, but not below one-fourth of the otherwise applicable period of *Ineligibility*.

10.8 *Results Management* Agreements

10.8.1 One (1) Year Reduction for Certain Anti-Doping Rule Violations Based on Early Admission and Acceptance of Sanction

Where an *Athlete* or other *Person*, after being notified by ISSF of a potential anti-doping rule violation that carries an asserted period of *Ineligibility* of four (4) or more years (including any period of *Ineligibility* asserted under Article 10.4), admits the violation and accepts the asserted period of *Ineligibility* no later than twenty (20) days after receiving notice of an anti-doping rule violation charge, the *Athlete* or other *Person* may receive a one (1) year reduction in the period of *Ineligibility* asserted by ISSF . Where the *Athlete* or other *Person* receives the one (1) year reduction in the asserted period of *Ineligibility* under this Article 10.8.1, no further reduction in the asserted period of *Ineligibility* shall be allowed under any other Article.

10.8.2 Case Resolution Agreement

Where the *Athlete* or other *Person* admits an anti-doping rule violation after being confronted with the anti-doping rule violation by ISSF and agrees to *Consequences* acceptable to ISSF and *WADA*, at their sole discretion, then: (a) the *Athlete* or other *Person* may receive a reduction in the period of *Ineligibility* based on an assessment by ISSF and *WADA* of the application of Articles 10.1 through 10.7 to the asserted anti-doping rule violation, the seriousness of the violation, the *Athlete* or other *Person*'s degree of *Fault* and how promptly the *Athlete* or other *Person* admitted the violation; and (b) the period of *Ineligibility* may start as early as the date of *Sample* collection or the date on which another anti-doping rule violation last occurred. In each case, however, where this Article is applied, the *Athlete* or other *Person* shall serve at least one-half of the agreed-upon period of *Ineligibility* going forward from the earlier of the date the *Athlete* or other *Person* accepted the imposition of a sanction or a *Provisional Suspension* which was subsequently respected by the *Athlete* or other *Person*. The decision by *WADA* and ISSF to enter or not enter into a case resolution agreement, and the amount of the reduction to, and the starting date of, the period of *Ineligibility* are not matters for determination or review by a hearing body and are not subject to appeal under Article 13.

If so requested by an *Athlete* or other *Person* who seeks to enter into a case resolution agreement under this Article, ISSF shall allow the *Athlete* or other *Person* to discuss an admission of the anti-doping rule violation with it subject to a *Without Prejudice Agreement*.

10.9 Multiple Violations

10.9.1 Second or Third Anti-Doping Rule Violation

10.9.1.1 For an *Athlete* or other *Person's* second anti-doping rule violation, the period of *Ineligibility* shall be the greater of:

(a) A six (6) month period of *Ineligibility*; or

(b) A period of Ineligibility in the range between:

CamScanner

(i) the sum of the period of *Ineligibility* imposed for the first anti-doping rule violation plus the period of *Ineligibility* otherwise applicable to the second anti-doping rule violation treated as if it were a first violation, and

(ii) twice the period of *Ineligibility* otherwise applicable to the second anti-doping rule violation treated as if it were a first violation, with the period of *Ineligibility* within this range to be determined based on the entirety of the circumstances and the *Athlete* or other *Person*'s degree of *Fault* with respect to the second violation.

10.9.1.2 A third anti-doping rule violation will always result in a lifetime period of *Ineligibility*, except if the third violation fulfills the condition for elimination or reduction of the period of *Ineligibility* under Article 10.5 or 10.6, or involves a violation of Article 2.4. In these particular cases, the period of *Ineligibility* shall be from eight (8) years to lifetime *Ineligibility*.

10.9.1.3 The period of *Ineligibility* established in Articles 10.9.1.1 and 10.9.1.2 may then be further reduced by the application of Article 10.7.

10.9.2 An anti-doping rule violation for which an *Athlete* or other *Person* has established *No Fault* or *Negligence* shall not be considered a violation for purposes of this Article 10.9. In addition, an anti-doping rule violation sanctioned under Article 10.2.4.1 shall not be considered a violation for purposes of Article 10.9.

10.9.3 Additional Rules for Certain Potential Multiple Violations

10.9.3.1 For purposes of imposing sanctions under Article 10.9, except as provided in Articles 10.9.3.2 and 10.9.3.3, an anti-doping rule violation will only be considered a second violation if ISSF can establish that the *Athlete* or other *Person* committed the additional anti-doping rule violation after the *Athlete* or other *Person* received notice pursuant to Article 7, or after ISSF made reasonable efforts to give notice of the first anti-doping rule violation. If ISSF cannot establish this, the violations shall be considered together as one single first violation, and the sanction imposed shall be based on the violation that carries the more severe sanction, including the application of *Aggravating Circumstances*. Results in all *Competitions* dating back to the earlier anti-doping rule violation will be *Disqualified* as provided in Article 10.10.

10.9.3.2 If ISSF establishes that an *Athlete* or other *Person* committed an additional anti-doping rule violation prior to notification, and that the additional violation occurred twelve (12) months or more before or after the first-noticed violation, then the period of Ineligibility for the additional violation shall be calculated as if the additional violation were a stand-alone first violation and this period of *Ineligibility* is served consecutively, rather than concurrently, with the period of *Ineligibility* imposed for the earlier-noticed violation. Where this Article 10.9.3.2 applies, the violations taken together shall constitute a single violation for purposes of Article 10.9.1.

10.9.3.3 If ISSF establishes that an *Athlete* or other *Person* committed a violation of Article 2.5 in connection with the *Doping Control* process for an underlying asserted anti-doping rule violation, the violation of Article 2.5 shall be treated as a stand-alone first violation and the period of Ineligibility for such violation shall be served consecutively, rather than concurrently, with the period of *Ineligibility*, if any, imposed for the underlying anti-doping rule violation. Where this Article 10.9.3.3 is applied, the violations taken together shall constitute a single violation for purposes of Article 10.9.1.

CamScanner

10.9.3.4 If ISSF establishes that a *Person* has committed a second or third anti-doping rule violation during a period of *Ineligibility*, the periods of *Ineligibility* for the multiple violations shall run consecutively, rather than concurrently.

10.9.4 Multiple Anti-Doping Rule Violations during Ten (10) Year Period

For purposes of Article 10.9, each anti-doping rule violation must take place within the same ten (10) year period in order to be considered multiple violations.

10.10 *Disqualification* of Results in *Competitions* Subsequent to *Sample* Collection or Commission of an Anti-Doping Rule Violation

In addition to the automatic *Disqualification* of the results in the *Competition* which produced the positive *Sample* under Article 9, all other competitive results of the *Athlete* obtained from the date a positive *Sample* was collected (whether *In-Competition* or *Out-of-Competition*), or other anti-doping rule violation occurred, through the commencement of any *Provisional Suspension* or *Ineligibility* period, shall, unless fairness requires otherwise, be *Disqualified* with all of the resulting *Consequences* including forfeiture of any medals, points and prizes.

10.11 Forfeited Prize Money

If ISSF recovers prize money forfeited as a result of an anti-doping rule violation, it shall take reasonable measures to allocate and distribute this prize money to the *Athletes* who would have been entitled to it had the forfeiting *Athlete* not competed.

10.12 *Financial Consequences*

10.12.1 Where an *Athlete* or other *Person* commits an anti-doping rule violation, ISSF may, in its discretion and subject to the principle of proportionality, elect to (a) recover from the *Athlete* or other *Person* costs associated with the anti-doping rule violation, regardless of the period of *Ineligibility* imposed and/or (b) fine the *Athlete* or other *Person* in an amount up to 5000 Euro, only in cases where the maximum period of *Ineligibility* otherwise applicable has already been imposed.

10.12.2 The imposition of a financial sanction or the ISSF's recovery of costs shall not be considered a basis for reducing the *Ineligibility* or other sanction which would otherwise be applicable under these Anti-Doping Rules.

10.13 Commencement of *Ineligibility* Period

Where an *Athlete* is already serving a period of *Ineligibility* for an anti-doping rule violation, any new period of *Ineligibility* shall commence on the first day after the current period of *Ineligibility* has been served. Otherwise, except as provided below, the period of *Ineligibility* shall start on the date of the final hearing decision providing for *Ineligibility* or, if the hearing is waived or there is no hearing, on the date *Ineligibility* is accepted or otherwise imposed.

10.13.1 Delays Not Attributable to the *Athlete* or other *Person*

Where there have been substantial delays in the hearing process or other aspects of *Doping Control*, and the *Athlete* or other *Person* can establish that such delays are not attributable to the *Athlete* or other *Person*, ISSF or CAS ADD, if applicable, may start the period of *Ineligibility* at an earlier date commencing as early as the date of *Sample* collection or the date on which another anti-doping rule violation last occurred. All competitive results achieved

CamScanner

during the period of *Ineligibility*, including retroactive *Ineligibility*, shall be *Disqualified*.

10.13.2 Credit for *Provisional Suspension* or Period of *Ineligibility* Served

10.13.2.1 If a *Provisional Suspension* is respected by the *Athlete* or other *Person*, then the *Athlete* or other *Person* shall receive a credit for such period of *Provisional Suspension* against any period of *Ineligibility* which may ultimately be imposed. If the *Athlete* or other *Person* does not respect a *Provisional Suspension*, then the *Athlete* or other *Person* shall receive no credit for any period of *Provisional Suspension* served. If a period of *Ineligibility* is served pursuant to a decision that is subsequently appealed, then the *Athlete* or other *Person* shall receive a credit for such period of *Ineligibility* served against any period of *Ineligibility* which may ultimately be imposed on appeal.

10.13.2.2 If an *Athlete* or other *Person* voluntarily accepts a *Provisional Suspension* in writing from ISSF and thereafter respects the *Provisional Suspension*, the *Athlete* or other *Person* shall receive a credit for such period of voluntary *Provisional Suspension* against any period of *Ineligibility* which may ultimately be imposed. A copy of the *Athlete* or other *Person's* voluntary acceptance of a *Provisional Suspension* shall be provided promptly to each party entitled to receive notice of an asserted anti-doping rule violation under Article 14.1.

10.13.2.3 No credit against a period of *Ineligibility* shall be given for any time period before the effective date of the *Provisional Suspension* or voluntary *Provisional Suspension* regardless of whether the *Athlete* elected not to compete or was suspended by a team.

10.13.2.4 In *Team Sports*, where a period of *Ineligibility* is imposed upon a team, unless fairness requires otherwise, the period of *Ineligibility* shall start on the date of the final hearing decision providing for *Ineligibility* or, if the hearing is waived, on the date *Ineligibility* is accepted or otherwise imposed. Any period of team *Provisional Suspension* (whether imposed or voluntarily accepted) shall be credited against the total period of *Ineligibility* to be served.

10.14 Status During *Ineligibility* or *Provisional Suspension*

10.14.1 Prohibition Against Participation During *Ineligibility* or *Provisional Suspension*

No *Athlete* or other *Person* who has been declared *Ineligible* or is subject to a *Provisional Suspension* may, during a period of *Ineligibility* or *Provisional Suspension*, participate in any capacity in a *Competition* or activity (other than authorized anti-doping *Education* or rehabilitation Programmes) authorized or organized by any *Signatory*, *Signatory's* member organization, or a club or other member organization of a *Signatory's* member organization, or in *Competitions* authorized or organized by any professional league or any international- or national-level *Event* organization or any elite or national-level sporting activity funded by a governmental agency.

An *Athlete* or other *Person* subject to a period of *Ineligibility* longer than four (4) years may, after completing four (4) years of the period of *Ineligibility*, participate as an *Athlete* in local sport events not sanctioned or otherwise under the authority of a *Code Signatory* or member of a *Code Signatory*, but only so long as the local sport event is not at a level that could otherwise qualify such *Athlete* or other *Person* directly or indirectly to compete in (or accumulate points toward) a national championship or *International Event*, and does not involve the *Athlete* or other *Person* working in any capacity with *Protected Persons*.

CamScanner

An *Athlete* or other *Person* subject to a period of *Ineligibility* shall remain subject to *Testing* and any requirement by ISSF to provide whereabouts information.

10.14.2 Return to Training

As an exception to Article 10.14.1, an *Athlete* may return to train with a team or to use the facilities of a club or other member organization of ISSF's or other *Signatory's* member organization during the shorter of: (1) the last two months of the *Athlete's* period of *Ineligibility*, or (2) the last one-quarter of the period of *Ineligibility* imposed.

10.14.3 Violation of the Prohibition of Participation During *Ineligibility* or *Provisional Suspension*

Where an *Athlete* or other *Person* who has been declared *Ineligible* violates the prohibition against participation during *Ineligibility* described in Article 10.14.1, the results of such participation shall be *Disqualified* and a new period of *Ineligibility* equal in length to the original period of *Ineligibility* shall be added to the end of the original period of *Ineligibility*. The new period of *Ineligibility*, including a reprimand and no period of *Ineligibility*, may be adjusted based on the *Athlete* or other *Person's* degree of *Fault* and other circumstances of the case. The determination of whether an *Athlete* or other *Person* has violated the prohibition against participation, and whether an adjustment is appropriate, shall be made by the *Anti-Doping Organization* whose *Results Management* led to the imposition of the initial period of *Ineligibility*. This decision may be appealed under Article 13.

An *Athlete* or other *Person* who violates the prohibition against participation during a *Provisional Suspension* described in Article 10.14.1 shall receive no credit for any period of *Provisional Suspension* served and the results of such participation shall be *Disqualified*.

Where an *Athlete Support Person* or other *Person* assists a *Person* in violating the prohibition against participation during *Ineligibility* or a *Provisional Suspension*, ISSF shall impose sanctions for a violation of Article 2.9 for such assistance.

10.14.4 Withholding of Financial Support during *Ineligibility*

In addition, for any anti-doping rule violation not involving a reduced sanction as described in Article 10.5 or 10.6, some or all sport-related financial support or other sport-related benefits received by such *Person* will be withheld by ISSF and its *National Federations*.

10.15 Automatic Publication of Sanction

A mandatory part of each sanction shall include automatic publication, as provided in Article 14.3.

ARTICLE 11 *CONSEQUENCES* TO TEAMS

11.1 *Testing* of Teams

Where one (1) member of a team (outside of *Team Sports*) has been notified of an anti-doping rule violation under Article 7 in connection with an *Event*, the ruling body for the *Event* may conduct appropriate *Target Testing* of all members of the team during the *Event Period*.

CamScanner

11.2 *Consequences* for Teams

11.2.1 An anti-doping rule violation committed by a member of a team in connection with an *In-Competition* test automatically leads to *Disqualification* of the result obtained by the team in that *Competition*, with all resulting *Consequences* for the team and its members, including forfeiture of any medals, points and prizes.

11.2.2 An anti-doping rule violation committed by a member of a team occurring during or in connection with an *Event* may lead to *Disqualification* of all of the results obtained by the team in that *Event* with all *Consequences* for the team and its members, including forfeiture of all medals, points and prizes, except as provided in Article 11.2.3.

11.2.3 Where an *Athlete* who is a member of a team committed an anti-doping rule violation during or in connection with one (1) *Competition* in an *Event,* if the other member(s) of the team establish(es) that he or she/they bear(s) *No Fault* or *Negligence* for that violation, the results of the team in any other *Competition(s)* in that *Event* shall not be *Disqualified* unless the results of the team in the *Competition(s)* other than the *Competition* in which the anti-doping rule violation occurred were likely to have been affected by the *Athlete's* anti-doping rule violation.

ARTICLE 12 SANCTIONS BY ISSF AGAINST OTHER SPORTING BODIES

When ISSF becomes aware that a *National Federation* or any other sporting body over which it has authority has failed to comply with, implement, uphold, and enforce these Anti-Doping Rules within that organization's or body's area of competence, ISSF has the authority and may take the following additional disciplinary actions:

12.1 Exclude all, or some group of, members of that organization or body from specified future *Events* or all *Events* conducted within a specified period of time.

12.2 Take additional disciplinary actions with respect to that organization's or body's recognition, the eligibility of their members to participate in ISSF's activities, and/or fine that organization or body based on the following:

12.2.1 Four (4) or more violations of these Anti-Doping Rules (other than violations involving Article 2.4) are committed by *Athletes* or other *Persons* affiliated with that organization or body during a twelve (12) month period. In such event: (a) all or some group of members of that organization or body may be banned from participation in any ISSF activities for a period of up to two (2) years and/or (b) that organization or body may be fined in an amount up to 10 000 Euro.

12.2.2 Four (4) or more violations of these Anti-Doping Rules (other than violations involving Article 2.4) are committed in addition to the violations described in Article 12.2.1 by *Athletes* or other *Persons* affiliated with that organization or body during a twelve (12) month period. In such event, that organization or body may be suspended for a period of up to four (4) years.

12.2.3 More than one *Athlete* or other *Person* affiliated with that organization or body commits an anti-doping rule violation during an *International Event.* In such event, that organization or body may be fined in an amount up to 10 000 Euro.

12.2.4 That organization or body has failed to make diligent efforts to keep ISSF informed about an *Athlete's* whereabouts after receiving a request for that information from ISSF. In such event, that organization or body may be fined in

CamScanner

an amount up to 2000 Euro per *Athlete*, in addition to reimbursement of all of the ISSF costs incurred in *Testing* that organization's or body's *Athletes*.

12.3 Withhold some or all funding or other financial and non-financial support to that organization or body.

12.4 Get that organization or body to reimburse ISSF for all costs (including but not limited to laboratory fees, hearing expenses and travel) related to a violation of these Anti-Doping Rules committed by an *Athlete* or other *Person* affiliated with that organization or body.

ARTICLE 13 *RESULTS MANAGEMENT*: APPEALS

13.1 Decisions Subject to Appeal

Decisions made under the *Code* or these Anti-Doping Rules may be appealed as set forth below in Articles 13.2 through 13.7 or as otherwise provided in these Anti-Doping Rules, the *Code* or the *International Standards*. Such decisions shall remain in effect while under appeal unless the appellate body orders otherwise.

13.1.1 Scope of Review Not Limited

The scope of review on appeal includes all issues relevant to the matter and is expressly not limited to the issues or scope of review before the initial decision maker. Any party to the appeal may submit evidence, legal arguments and claims that were not raised in the first instance hearing so long as they arise from the same cause of action or same general facts or circumstances raised or addressed in the first instance hearing.

13.1.2 *CAS* Shall Not Defer to the Findings Being Appealed

In making its decision, *CAS* shall not give deference to the discretion exercised by the body whose decision is being appealed.

13.1.3 *WADA* Not Required to Exhaust Internal Remedies

Where *WADA* has a right to appeal under Article 13 and no other party has appealed a final decision within ISSF's process, *WADA* may appeal such decision directly to *CAS* without having to exhaust other remedies in ISSF's process.

13.2 Appeals from Decisions Regarding Anti-Doping Rule Violations, *Consequences*, *Provisional Suspensions,* Implementation of Decisions and Authority

A decision that an anti-doping rule violation was committed, a decision imposing *Consequences* or not imposing *Consequences* for an anti-doping rule violation, or a decision that no anti-doping rule violation was committed; a decision that an anti-doping rule violation proceeding cannot go forward for procedural reasons (including, for example, prescription); a decision by *WADA* not to grant an exception to the six (6) months notice requirement for a retired *Athlete* to return to *Competition* under Article 5.6.1; a decision by *WADA* assigning *Results Management* under Article 7.1 of the *Code*; a decision by ISSF not to bring forward an *Adverse Analytical Finding* or an *Atypical Finding* as an anti-doping rule violation, or a decision not to go forward with an anti-doping rule violation after an investigation in accordance with the *International Standard* for *Results Management*; a decision to impose, or lift, a *Provisional Suspension* as a result of a *Provisional Hearing*; ISSF's failure to comply with Article 7.4; a decision that ISSF lacks authority to rule on an

CamScanner

alleged anti-doping rule violation or its *Consequences*; a decision to suspend, or not suspend, *Consequences* or to reinstate, or not reinstate, *Consequences* under Article 10.7.1; failure to comply with Articles 7.1.4 and 7.1.5 of the *Code*; failure to comply with Article 10.8.1; a decision under Article 10.14.3; a decision by ISSF not to implement another *Anti-Doping Organization's* decision under Article 15; and a decision under Article 27.3 of the *Code* may be appealed exclusively as provided in this Article 13.2.

13.2.1 Appeals Involving *International-Level Athletes* or *International Events*

In cases arising from participation in an *International Event* or in cases involving *International-Level Athletes*, the decision may be appealed exclusively to *CAS*.

13.2.2 Appeals Involving Other *Athletes* or Other *Persons*

In cases where Article 13.2.1 is not applicable, the decision may be appealed to an appellate body, in accordance with rules adopted by the *National Anti-Doping Organization* having authority over the *Athlete* or other *Person*.

The rules for such appeal shall respect the following principles: a timely hearing; a fair, impartial, *Operationally Independent* and *Institutionally Independent* hearing panel; the right to be represented by counsel at the *Person's* own expense; and a timely, written, reasoned decision.

If no such body as described above is in place and available at the time of the appeal, the decision may be appealed to *CAS* in accordance with the applicable procedural rules.

13.2.3 *Persons* Entitled to Appeal

13.2.3.1 Appeals Involving *International-Level Athletes* or *International Events*

In cases under Article 13.2.1, the following parties shall have the right to appeal to *CAS*: (a) the *Athlete* or other *Person* who is the subject of the decision being appealed; (b) the other party to the case in which the decision was rendered; (c) ISSF; (d) the *National Anti-Doping Organization* of the *Person's* country of residence or countries where the *Person* is a national or license holder; (e) the International Olympic Committee or International Paralympic Committee, as applicable, where the decision may have an effect in relation to the Olympic Games or Paralympic Games, including decisions affecting eligibility for the Olympic Games or Paralympic Games; and (f) *WADA*.

13.2.3.2 Appeals Involving Other *Athletes* or Other *Persons*

In cases under Article 13.2.2, the parties having the right to appeal to the national-level appeal body shall be as provided in the *National Anti-Doping Organization's* rules but, at a minimum, shall include the following parties: (a) the *Athlete* or other *Person* who is the subject of the decision being appealed; (b) the other party to the case in which the decision was rendered; (c) ISSF; (d) the *National Anti-Doping Organization* of the *Person's* country of residence or countries where the *Person* is a national or license holder; (e) the International Olympic Committee or International Paralympic Committee, as applicable, where the decision may have an effect in relation to the Olympic Games or Paralympic Games, including decisions affecting eligibility for the Olympic Games or Paralympic Games; and (f) *WADA*.

CamScanner

For cases under Article 13.2.2, *WADA*, the International Olympic Committee, the International Paralympic Committee, and ISSF shall also have the right to appeal to *CAS* with respect to the decision of the national-level appeal body.

Any party filing an appeal shall be entitled to assistance from *CAS* to obtain all relevant information from the *Anti-Doping Organization* whose decision is being appealed and the information shall be provided if *CAS* so directs.

13.2.3.3 Duty to Notify

All parties to any *CAS* appeal must ensure that *WADA* and all other parties with a right to appeal have been given timely notice of the appeal.

13.2.3.4 Appeal from Imposition of *Provisional Suspension*

Notwithstanding any other provision herein, the only *Person* who may appeal from the imposition of a *Provisional Suspension* is the *Athlete* or other *Person* upon whom the *Provisional Suspension* is imposed.

13.2.3.5 Appeal from Decisions under Article 12

Decisions by ISSF pursuant to Article 12 may be appealed exclusively to *CAS* by the *National Federation* or other body.

13.2.4 Cross Appeals and other Subsequent Appeals Allowed

Cross appeals and other subsequent appeals by any respondent named in cases brought to *CAS* under the *Code* are specifically permitted. Any party with a right to appeal under this Article 13 must file a cross appeal or subsequent appeal at the latest with the party's answer.

13.3 Failure to Render a Timely Decision by ISSF

Where, in a particular case, ISSF fails to render a decision with respect to whether an anti-doping rule violation was committed within a reasonable deadline set by *WADA*, *WADA* may elect to appeal directly to *CAS* as if ISSF had rendered a decision finding no anti-doping rule violation. If the *CAS* hearing panel determines that an anti-doping rule violation was committed and that *WADA* acted reasonably in electing to appeal directly to *CAS*, then *WADA's* costs and attorney fees in prosecuting the appeal shall be reimbursed to *WADA* by ISSF.

13.4 Appeals Relating to *TUEs*

TUE decisions may be appealed exclusively as provided in Article 4.4.

13.5 Notification of Appeal Decisions

ISSF shall promptly provide the appeal decision to the *Athlete* or other *Person* and to the other *Anti-Doping Organizations* that would have been entitled to appeal under Article 13.2.3 as provided under Article 14.2.

13.6 Time for Filing Appeals

13.6.1 Appeals to *CAS*

The time to file an appeal to *CAS* shall be twenty-one (21) days from the date of receipt of the decision by the appealing party. The above notwithstanding, the following shall apply in connection with appeals filed by a party entitled to appeal but which was not a party to the proceedings that led to the decision being appealed:

(a) Within fifteen (15) days from the notice of the decision, such party/ies shall have the right to request a copy of the full case file pertaining to the

CamScanner

decision from the *Anti-Doping Organization* that had *Results Management* authority;

(b) If such a request is made within the fifteen (15) day period, then the party making such request shall have twenty-one (21) days from receipt of the file to file an appeal to *CAS*.

The above notwithstanding, the filing deadline for an appeal filed by *WADA* shall be the later of:

(a) Twenty-one (21) days after the last day on which any other party having a right to appeal could have appealed, or

(b) Twenty-one (21) days after *WADA's* receipt of the complete file relating to the decision.

13.6.2 Appeals Under Article 13.2.2

The time to file an appeal to an independent and impartial body in accordance with rules established by the *National Anti-Doping Organization* shall be indicated by the same rules of the *National Anti-Doping Organization*.

The above notwithstanding, the filing deadline for an appeal filed by *WADA* shall be the later of:

(a) Twenty-one (21) days after the last day on which any other party having a right to appeal could have appealed, or

(b) Twenty-one (21) days after *WADA's* receipt of the complete file relating to the decision.

ARTICLE 14 CONFIDENTIALITY AND REPORTING

14.1 Information Concerning *Adverse Analytical Findings*, *Atypical Findings*, and Other Asserted Anti-Doping Rule Violations

14.1.1 Notice of Anti-Doping Rule Violations to *Athletes* and other *Persons*

Notice to *Athletes* or other *Persons* of anti-doping rule violations asserted against them shall occur as provided under Articles 7 and 14.

If at any point during *Results Management* up until the anti-doping rule violation charge, ISSF decides not to move forward with a matter, it must notify the *Athlete* or other *Person*, (provided that the *Athlete* or other *Person* had been already informed of the ongoing *Results Management*).

Notice shall be delivered or emailed to *Athletes* or other *Persons.*

14.1.2 Notice of Anti-Doping Rule Violations to *National Anti-Doping Organizations* and *WADA*

Notice of the assertion of an anti-doping rule violation to the *Athlete's* or other *Person's National Anti-Doping Organization* and *WADA* shall occur as provided under Articles 7 and 14, simultaneously with the notice to the *Athlete* or other *Person*.

If at any point during *Results Management* up until the anti-doping rule violation charge, ISSF decides not to move forward with a matter, it must give notice (with reasons) to the *Anti-Doping Organizations* with a right of appeal under Article 13.2.3.

Notice shall be delivered or emailed.

CamScanner

14.1.3 Content of an Anti-Doping Rule Violation Notice

Notification of an anti-doping rule violation shall include: the *Athlete's* or other *Person's* name, country, sport and discipline within the sport, the *Athlete's* competitive level, whether the test was *In-Competition* or *Out-of-Competition*, the date of *Sample* collection, the analytical result reported by the laboratory, and other information as required by the *International Standard* for *Testing* and Investigations and *International Standard* for *Results Management*.

Notification of anti-doping rule violations other than under Article 2.1 shall also i

14.1.4 Status Reports

Except with respect to investigations which have not resulted in a notice of an anti-doping rule violation pursuant to Article 14.1.1, the *Athlete's* or other *Person's National Anti-Doping Organization* and *WADA* shall be regularly updated on the status and findings of any review or proceedings conducted pursuant to Article 7, 8 or 13 and shall be provided with a prompt written reasoned explanation or decision explaining the resolution of the matter.

14.1.5 Confidentiality

The recipient organizations shall not disclose this information beyond those *Persons* with a need to know (which would include the appropriate personnel at the applicable *National Olympic Committee*, *National Federation*, and team in a *Team Sport*) until ISSF has made *Public Disclosure* as permitted by Article 14.3.

14.1.6 Protection of Confidential Information by an Employee or Agent of the ISSF

ISSF shall ensure that information concerning *Adverse Analytical Findings*, *Atypical Findings*, and other asserted anti-doping rule violations remains confidential until such information is *Publicly Disclosed* in accordance with Article 14.3. ISSF shall ensure that its employees (whether permanent or otherwise), contractors, agents, consultants, and *Delegated Third Parties* are subject to fully enforceable contractual duty of confidentiality and to fully enforceable procedures for the investigation and disciplining of improper and/or unauthorized disclosure of such confidential information.

14.2 Notice of Anti-Doping Rule Violation or violations of *Ineligibility* or *Provisional Suspension* Decisions and Request for Files

14.2.1 Anti-doping rule violation decisions or decisions related to violations of *Ineligibility* or *Provisional Suspension* rendered pursuant to Article 7.6, 8.2, 10.5, 10.6, 10.7, 10.14.3 or 13.5 shall include the full reasons for the decision, including, if applicable, a justification for why the maximum potential sanction was not imposed. Where the decision is not in English or French, ISSF shall provide an English or French summary of the decision and the supporting reasons.

14.2.2 An *Anti-Doping Organization* having a right to appeal a decision received pursuant to Article 14.2.1 may, within fifteen (15) days of receipt, request a copy of the full case file pertaining to the decision.

14.3 *Public Disclosure*

14.3.1 After notice has been provided to the *Athlete* or other *Person* in accordance with the *International Standard* for *Results Management*, and to the applicable *Anti-Doping Organizations* in accordance with Article 14.1.2, the identity of any *Athlete* or other *Person* who is notified of a potential anti-doping rule violation,

CamScanner

the *Prohibited Substance* or *Prohibited Method* and the nature of the violation involved, and whether the *Athlete* or other *Person* is subject to a *Provisional Suspension* may be *Publicly Disclosed* by ISSF.

14.3.2 No later than twenty (20) days after it has been determined in an appellate decision under Article 13.2.1 or 13.2.2, or such appeal has been waived, or a hearing in accordance with Article 8 has been waived, or the assertion of an anti-doping rule violation has not otherwise been timely challenged, or the matter has been resolved under Article 10.8, or a new period of *Ineligibility*, or reprimand, has been imposed under Article 10.14.3, ISSF must *Publicly Disclose* the disposition of the anti-doping matter, including the sport, the anti-doping rule violated, the name of the *Athlete* or other *Person* committing the violation, the *Prohibited Substance* or *Prohibited Method* involved (if any) and the *Consequences* imposed. ISSF must also *Publicly Disclose* within twenty (20) days the results of appellate decisions concerning anti-doping rule violations, including the information described above, unless such disclosure would result in ISSF breaching applicable national laws. In such a case, ISSF will provide for alternative *Public Disclosure* process.

14.3.3 After an anti-doping rule violation has been determined to have been committed in an appellate decision under Article 13.2.1 or 13.2.2 or such appeal has been waived, or in a hearing in accordance with Article 8 or where such hearing has been waived, or the assertion of an anti-doping rule violation has not otherwise been timely challenged, or the matter has been resolved under Article 10.8, ISSF may make public such determination or decision and may comment publicly on the matter.

14.3.4 In any case where it is determined, after a hearing or appeal, that the *Athlete* or other *Person* did not commit an anti-doping rule violation, the fact that the decision has been appealed may be *Publicly Disclosed*. However, the decision itself and the underlying facts may not be *Publicly Disclosed* except with the consent of the *Athlete* or other *Person* who is the subject of the decision. ISSF shall use reasonable efforts to obtain such consent, and if consent is obtained, shall *Publicly Disclose* the decision in its entirety or in such redacted form as the *Athlete* or other *Person* may approve.

14.3.5 Publication shall be accomplished at a minimum by placing the required information on the ISSF 's website and leaving the information up for the longer of one (1) month or the duration of any period of *Ineligibility*. Publication shall be removed immediately after the expiry of the period of *Ineligibility* or otherwise indicated time period.

14.3.6 Except as provided in Articles 14.3.1 and 14.3.3, no *Anti-Doping Organization*, *National Federation*, or *WADA*-accredited laboratory, or any official of any such body, shall publicly comment on the specific facts of any pending case (as opposed to general description of process and science) except in response to public comments attributed to, or based on information provided by, the *Athlete*, other *Person* or their entourage or other representatives.

14.3.7 The mandatory *Public Disclosure* required in Article 14.3.2 shall not be required where the *Athlete* or other *Person* who has been found to have committed an anti-doping rule violation is a *Minor*, *Protected Person* or *Recreational Athlete*. Any optional *Public Disclosure* in a case involving a *Minor*, *Protected Person* or *Recreational Athlete* shall be proportionate to the facts and circumstances of the case.

CamScanner

14.4 Statistical Reporting

ISSF shall, at least annually, publish publicly a general statistical report of its *Doping Control* activities, with a copy provided to *WADA*. ISSF may also publish reports showing the name of each *Athlete* tested and the date of each *Testing*.

14.5 *Doping Control* Information Database and Monitoring of Compliance

To enable *WADA* to perform its compliance monitoring role and to ensure the effective use of resources and sharing of applicable *Doping Control* information among *Anti-Doping Organizations*, ISSF shall report to *WADA* through *ADAMS Doping Control*-related information, including, in particular:

(a) *Athlete Biological Passport* data for *International-Level Athletes* and *National-Level Athletes*,

(b) Whereabouts information for *Athletes* including those in *Registered Testing Pools*,

(c) *TUE* decisions, and

(d) *Results Management* decisions,

as required under the applicable *International Standard(s)*.

14.5.1 To facilitate coordinated test distribution planning, avoid unnecessary duplication in *Testing* by various *Anti-Doping Organizations*, and to ensure that *Athlete Biological Passport* profiles are updated, ISSF shall report all *In-Competition* and *Out-of-Competition* tests to *WADA* by entering the *Doping Control* forms into *ADAMS* in accordance with the requirements and timelines contained in the *International Standard* for *Testing* and Investigations.

14.5.2 To facilitate *WADA*'s oversight and appeal rights for *TUEs*, ISSF shall report all *TUE* applications, decisions and supporting documentation using *ADAMS* in accordance with the requirements and timelines contained in the *International Standard* for *Therapeutic Use Exemptions*.

14.5.3 To facilitate *WADA*'s oversight and appeal rights for *Results Management*, ISSF shall report the following information into *ADAMS* in accordance with the requirements and timelines outlined in the *International Standard* for *Results Management*: (a) notifications of anti-doping rule violations and related decisions for *Adverse Analytical Findings*; (b) notifications and related decisions for other anti-doping rule violations that are not *Adverse Analytical Findings*; (c) whereabouts failures; and (d) any decision imposing, lifting or reinstating a *Provisional Suspension*.

14.5.4 The information described in this Article will be made accessible, where appropriate and in accordance with the applicable rules, to the *Athlete*, the *Athlete*'s *National Anti-Doping Organization*, and any other *Anti-Doping Organizations* with *Testing* authority over the *Athlete*.

14.6 Data Privacy

14.6.1 ISSF may collect, store, process or disclose personal information relating to *Athletes* and other *Persons* where necessary and appropriate to conduct its *Anti-Doping Activities* under the *Code*, the *International Standards* (including specifically the *International Standard* for the Protection of Privacy and Personal Information), these Anti-Doping Rules, and in compliance with applicable law.

CamScanner

14.6.2 Without limiting the foregoing, ISSF shall:

(a) Only process personal information in accordance with a valid legal ground;

(b) Notify any *Participant* or *Person* subject to these Anti-Doping Rules, in a manner and form that complies with applicable laws and the *International Standard* for the Protection of Privacy and Personal Information, that their personal information may be processed by ISSF and other *Persons* for the purpose of the implementation of these Anti-Doping Rules;

(c) Ensure that any third-party agents (including any *Delegated Third Party*) with whom ISSF shares the personal information of any *Participant* or *Person* is subject to appropriate technical and contractual controls to protect the confidentiality and privacy of such information.

ARTICLE 15 IMPLEMENTATION OF DECISIONS

15.1 Automatic Binding Effect of Decisions by *Signatory Anti-Doping Organizations*

15.1.1 A decision of an anti-doping rule violation made by a *Signatory Anti-Doping Organization*, an appellate body (Article 13.2.2 of the *Code*) or *CAS* shall, after the parties to the proceeding are notified, automatically be binding beyond the parties to the proceeding upon ISSF and its *National Federations*, as well as every *Signatory* in every sport with the effects described below:

15.1.1.1 A decision by any of the above-described bodies imposing a *Provisional Suspension* (after a *Provisional Hearing* has occurred or the *Athlete* or other *Person* has either accepted the *Provisional Suspension* or has waived the right to a *Provisional Hearing*, expedited hearing or expedited appeal offered in accordance with Article 7.4.3) automatically prohibits the *Athlete* or other *Person* from participation (as described in Article 10.14.1) in all sports within the authority of any *Signatory* during the *Provisional Suspension*.

15.1.1.2 A decision by any of the above-described bodies imposing a period of *Ineligibility* (after a hearing has occurred or been waived) automatically prohibits the *Athlete* or other *Person* from participation (as described in Article 10.14.1) in all sports within the authority of any *Signatory* for the period of *Ineligibility*.

15.1.1.3 A decision by any of the above-described bodies accepting an anti-doping rule violation automatically binds all *Signatories*.

15.1.1.4 A decision by any of the above-described bodies to *Disqualify* results under Article 10.10 for a specified period automatically *Disqualifies* all results obtained within the authority of any *Signatory* during the specified period.

15.1.2 ISSF and its *National Federations* shall recognize and implement a decision and its effects as required by Article 15.1.1, without any further action required, on the earlier of the date ISSF receives actual notice of the decision or the date the decision is placed by *WADA* into *ADAMS*.

15.1.3 A decision by an *Anti-Doping Organization*, a national appellate body or *CAS* to suspend, or lift, *Consequences* shall be binding upon ISSF and its *National Federations* without any further action required, on the earlier of the date ISSF receives actual notice of the decision or the date the decision is placed into *ADAMS*.

15.1.4 Notwithstanding any provision in Article 15.1.1, however, a decision of an anti-doping rule violation by a *Major Event Organization* made in an

CamScanner

expedited process during an *Event* shall not be binding on ISSF or its *National Federations* unless the rules of the *Major Event Organization* provide the *Athlete* or other *Person* with an opportunity to an appeal under non-expedited procedures.

15.2 Implementation of Other Decisions by *Anti-Doping Organizations*

ISSF and its *National Federations* may decide to implement other anti-doping decisions rendered by *Anti-Doping Organizations* not described in Article 15.1.1 above, such as a *Provisional Suspension* prior to a *Provisional Hearing* or acceptance by the *Athlete* or other *Person*.

15.3 Implementation of Decisions by Body that is not a *Signatory*

An anti-doping decision by a body that is not a *Signatory* to the *Code* shall be implemented by ISSF and its *National Federations*, if ISSF finds that the decision purports to be within the authority of that body and the anti-doping rules of that body are otherwise consistent with the *Code*.

ARTICLE 16 STATUTE OF LIMITATIONS

No anti-doping rule violation proceeding may be commenced against an *Athlete* or other *Person* unless he or she has been notified of the anti-doping rule violation as provided in Article 7, or notification has been reasonably attempted, within ten (10) years from the date the violation is asserted to have occurred.

ARTICLE 17 *EDUCATION*

ISSF shall plan, implement, evaluate and promote *Education* in line with the requirements of Article 18.2 of the *Code* and the *International Standard* for *Education*.

ARTICLE 18 ADDITIONAL ROLES AND RESPONSIBILITIES OF *NATIONAL FEDERATIONS*

18.1 All *National Federations* and their members shall comply with the *Code, International Standards*, and these Anti-Doping Rules. All *National Federations* and other members shall include in their policies, rules and Programmes the provisions necessary to ensure that ISSF may enforce these Anti-Doping Rules (including carrying out *Testing*) directly in respect of *Athletes* (including *National-Level Athletes*) and other *Persons* under their anti-doping authority as specified in the Introduction to these Anti-Doping Rules (Section “Scope of these Anti-Doping Rules”).

18.2 Each *National Federation* shall incorporate these Anti-Doping Rules either directly or by reference into its governing documents, constitution and/or rules as part of the rules of sport that bind their members so that the *National Federation* may enforce them itself directly in respect of *Athletes* (including *National-Level Athletes*) and other *Persons* under its anti-doping authority.

18.3 By adopting these Anti-Doping Rules and incorporating them into their governing documents and rules of sport, *National Federations* shall cooperate with and support ISSF in that function. They shall also recognize, abide by and implement the decisions made pursuant to these Anti-Doping Rules, including the decisions imposing sanctions on *Persons* under their authority.

18.4 All *National Federations* shall take appropriate action to enforce compliance with the *Code*, *International Standards*, and these Anti-Doping Rules by *inter alia*:

CamScanner

(i) conducting *Testing* only under the documented authority of ISSF and using their *National Anti-Doping Organization* or other *Sample* collection authority to collect *Samples* in compliance with the *International Standard* for *Testing* and Investigations;

(ii) recognizing the authority of the *National Anti-Doping Organization* in their country in accordance with Article 5.2.1 of the *Code* and assisting as appropriate with the *National Anti-Doping Organization's* implementation of the national *Testing* Programme for their sport;

(iii) analyzing all *Samples* collected using a *WADA*-accredited or *WADA*-approved laboratory in accordance with Article 6.1; and

(iv) ensuring that any national level anti-doping rule violation cases discovered by *National Federations* are adjudicated by an *Operationally Independent* hearing panel in accordance with Article 8.1 and the *International Standard* for *Results Management*.

18.5 All *National Federations* shall establish rules requiring all *Athletes* preparing for or participating in a *Competition* or activity authorized or organized by a *National Federation* or one of its member organizations, and all *Athlete Support Personnel* associated with such *Athletes*, to agree to be bound by these Anti-Doping Rules and to submit to the *Results Management* authority of the *Anti-Doping Organization* in conformity with the *Code* as a condition of such participation.

18.6 All *National Federations* shall report any information suggesting or relating to an anti-doping rule violation to ISSF and to their *National Anti-Doping Organizations* and shall cooperate with investigations conducted by any *Anti-Doping Organization* with authority to conduct the investigation.

18.7 All *National Federations* shall have disciplinary rules in place to prevent *Athlete Support Personnel* who are *Using Prohibited Substances* or *Prohibited Methods* without valid justification from providing support to *Athletes* under the authority of ISSF or the *National Federation*.

18.8 All *National Federations* shall conduct anti-doping *Education* in coordination with their *National Anti-Doping Organizations.*

ARTICLE 19 ADDITIONAL Roles and responsibilities OF ISSF

19.1 In addition to the roles and responsibilities described in Article 20.3 of the *Code* for International Federations, ISSF shall report to *WADA* on ISSF's compliance with the *Code* and the *International Standards* in accordance with Article 24.1.2 of the *Code*.

19.2 Subject to applicable law, and in accordance with Article 20.3.4 of the *Code*, all ISSF board members, directors, officers, employees and appointed *Delegated Third Parties* who are involved in any aspect of *Doping Control*, must sign a form provided by ISSF, agreeing to be bound by these Anti-Doping Rules as *Persons* in conformity with the *Code* for direct and intentional misconduct.

19.3 Subject to applicable law, and in accordance with Article 20.3.5 of the *Code*, any ISSF employee who is involved in *Doping Control* (other than authorized anti-doping *Education* or rehabilitation Programmes) must sign a statement provided by ISSF confirming that they are not *Provisionally Suspended* or serving a period of *Ineligibility* and have not been directly or intentionally engaged in conduct within the previous six (6) years which would have

CamScanner

constituted a violation of anti-doping rules if *Code*-compliant rules had been applicable to them.

ARTICLE 20 ADDITIONAL ROLES AND RESPONSIBILITIES OF *ATHLETES*

20.1 To be knowledgeable of and comply with these Anti-Doping Rules.

20.2 To be available for *Sample* collection at all times.

20.3 To take responsibility, in the context of anti-doping, for what they ingest and *Use*.

20.4 To inform medical personnel of their obligation not to *Use Prohibited Substance*s and *Prohibited Methods* and to take responsibility to make sure that any medical treatment received does not violate these Anti-Doping Rules.

20.5 To disclose to ISSF and their *National Anti-Doping Organization* any decision by a non-*Signatory* finding that the *Athlete* committed an anti-doping rule violation within the previous ten (10) years.

20.6 To cooperate with *Anti-Doping Organizations* investigating anti-doping rule violations.

20.7 To disclose the identity of their *Athlete Support Personnel* upon request by ISSF or a *National Federation*, or any other *Anti-Doping Organization* with authority over the *Athlete*.

20.8 Offensive conduct towards a *Doping Control* official or other *Person* involved in *Doping Control* by an *Athlete*, which does not otherwise constitute *Tampering*, may result in a charge of misconduct under the ISSF's Code of Ethics.

ARTICLE 21 ADDITIONAL ROLES AND RESPONSIBILITIES OF *ATHLETE SUPPORT PERSONNEL*

21.1 To be knowledgeable of and comply with these Anti-Doping Rules.

21.2 To cooperate with the *Athlete Testing* Programme.

21.3 To use their influence on *Athlete* values and behavior to foster anti-doping attitudes.

21.4 To disclose to ISSF and their *National Anti-Doping Organization* any decision by a non-*Signatory* finding that they committed an anti-doping rule violation within the previous ten (10) years.

21.5 To cooperate with *Anti-Doping Organizations* investigating anti-doping rule violations.

21.6 *Athlete Support Personnel* shall not *Use* or *Possess* any *Prohibited Substance* or *Prohibited Method* without valid justification.

21.7 Offensive conduct towards a *Doping Control* official or other *Person* involved in *Doping Control* by *Athlete Support Personnel*, which does not otherwise constitute *Tampering*, may result in a charge of misconduct under ISSF's Code of Ethics.

ARTICLE 22 ADDITIONAL ROLES AND RESPONSIBILITIES OF OTHER *PERSONS* SUBJECT TO THESE ANTI-DOPING RULES

22.1 To be knowledgeable of and comply with these Anti-Doping Rules.

CamScanner

22.2 To disclose to ISSF and their *National Anti-Doping Organization* any decision by a non-*Signatory* finding that they committed an anti-doping rule violation within the previous ten (10) years.

22.3 To cooperate with *Anti-Doping Organizations* investigating anti-doping rule violations.

22.4 Not to *Use* or *Possess* any *Prohibited Substance* or *Prohibited Method* without valid justification.

22.5 Offensive conduct towards a *Doping Control* official or other *Person* involved in *Doping Control* by a *Person*, which does not otherwise constitute *Tampering*, may result in a charge of misconduct under ISSF's Code of Ethics].

ARTICLE 23 INTERPRETATION OF THE *CODE*

23.1 The official text of the *Code* shall be maintained by *WADA* and shall be published in English and French. In the event of any conflict between the English and French versions, the English version shall prevail.

23.2 The comments annotating various provisions of the *Code* shall be used to interpret the *Code*.

23.3 The *Code* shall be interpreted as an independent and autonomous text and not by reference to the existing law or statutes of the *Signatories* or governments.

23.4 The headings used for the various Parts and Articles of the *Code* are for convenience only and shall not be deemed part of the substance of the *Code* or to affect in any way the language of the provisions to which they refer.

23.5 Where the term "days" is used in the *Code* or an *International Standard*, it shall mean calendar days unless otherwise specified.

23.6 The *Code* shall not apply retroactively to matters pending before the date the *Code* is accepted by a *Signatory* and implemented in its rules. However, pre-*Code* anti-doping rule violations would continue to count as "First violations" or "Second violations" for purposes of determining sanctions under Article 10 for subsequent post-*Code* violations.

23.7 The Purpose, Scope and Organization of the World Anti-Doping Programme and the *Code* and Appendix 1, Definitions, and Appendix 2, Examples of the Application of Article 10, shall be considered integral parts of the *Code*.

ARTICLE 24 FINAL PROVISIONS

24.1 Where the term "days" is used in these Anti-Doping Rules, it shall mean calendar days unless otherwise specified.

24.2 These Anti-Doping Rules shall be interpreted as an independent and autonomous text and not by reference to existing law or statutes.

24.3 These Anti-Doping Rules have been adopted pursuant to the applicable provisions of the *Code* and the *International Standards* and shall be interpreted in a manner that is consistent with applicable provisions of the *Code* and the *International Standards*. The *Code* and the *International Standards* shall be considered integral parts of these Anti-Doping Rules and shall prevail in case of conflict.

24.4 The Introduction and Appendix 1 shall be considered integral parts of these Anti-Doping Rules.

CamScanner

24.5 The comments annotating various provisions of the *Code* are incorporated by reference into these Anti-Doping Rules, shall be treated as if set out fully herein, and shall be used to interpret these Anti-Doping Rules.

24.6 These Anti-Doping Rules shall enter into force on 1 January 2021 (the "Effective Date"). They repeal ISSF's Anti-Doping Rules that came into effect on 1 January 2018.

24.7 These Anti-Doping Rules shall not apply retroactively to matters pending before the Effective Date. However:

24.7.1 Anti-doping rule violations taking place prior to the Effective Date count as "first violations" or "second violations" for purposes of determining sanctions under Article 10 for violations taking place after the Effective Date.

24.7.2 Any anti-doping rule violation case which is pending as of the Effective Date and any anti-doping rule violation case brought after the Effective Date based on an anti-doping rule violation which occurred prior to the Effective Date, shall be governed by the substantive anti-doping rules in effect at the time the alleged anti-doping rule violation occurred, and not by the substantive anti-doping rules set out in these Anti-Doping Rules, unless the panel hearing the case determines the principle of "lex mitior" appropriately applies under the circumstances of the case.

For these purposes, the retrospective periods in which prior violations can be considered for purposes of multiple violations under Article 10.9.4 and the statute of limitations set forth in Article 16 are procedural rules, not substantive rules, and should be applied retroactively along with all of the other procedural rules in these Anti-Doping Rules (provided, however, that Article 16 shall only be applied retroactively if the statute of limitation period has not already expired by the Effective Date).

24.7.3 Any Article 2.4 whereabouts failure (whether a filing failure or a missed test, as those terms are defined in the *International Standard* for *Results Management*) prior to the Effective Date shall be carried forward and may be relied upon, prior to expiry, in accordance with the *International Standard* for *Results Management*, but it shall be deemed to have expired twelve (12) months after it occurred.

24.7.4 With respect to cases where a final decision finding an anti-doping rule violation has been rendered prior to the Effective Date, but the *Athlete* or other *Person* is still serving the period of *Ineligibility* as of the Effective Date, the *Athlete* or other *Person* may apply to ISSF or other *Anti-Doping Organization* which had *Results Management* responsibility for the anti-doping rule violation to consider a reduction in the period of *Ineligibility* in light of these Anti-Doping Rules. Such application must be made before the period of *Ineligibility* has expired. The decision rendered may be appealed pursuant to Article 13.2. These Anti-Doping Rules shall have no application to any case where a final decision finding an anti-doping rule violation has been rendered and the period of *Ineligibility* has expired.

24.7.5 For purposes of assessing the period of *Ineligibility* for a second violation under Article 10.9.1, where the sanction for the first violation was determined based on rules in force prior to the Effective Date, the period of *Ineligibility* which would have been assessed for that first violation had these Anti-Doping Rules been applicable, shall be applied.

24.7.6 Changes to the *Prohibited List* and *Technical Documents* relating to substances on the *Prohibited List* shall not, unless they specifically provide

CamScanner

otherwise, be applied retroactively. As an exception, however, when a *Prohibited Substance* has been removed from the *Prohibited List*, an *Athlete* or other *Person* currently serving a period of *Ineligibility* on account of the formerly *Prohibited Substance* may apply to ISSF or other *Anti-Doping Organization* which had *Results Management* responsibility for the anti-doping rule violation to consider a reduction in the period of *Ineligibility* in light of the removal of the substance from the *Prohibited List*.

APPENDIX 1 DEFINITIONS

ADAMS: The Anti-Doping Administration and Management System is a Web-based database management tool for data entry, storage, sharing, and reporting designed to assist stakeholders and *WADA* in their anti-doping operations in conjunction with data protection legislation.

Administration: Providing, supplying, supervising, facilitating, or otherwise participating in the *Use* or *Attempted Use* by another *Person* of a *Prohibited Substance* or *Prohibited Method*. However, this definition shall not include the actions of bona fide medical personnel involving a *Prohibited Substance* or *Prohibited Method* used for genuine and legal therapeutic purposes or other acceptable justification and shall not include actions involving *Prohibited Substances* which are not prohibited in *Out-of-Competition Testing* unless the circumstances as a whole demonstrate that such *Prohibited Substances* are not intended for genuine and legal therapeutic purposes or are intended to enhance sport performance.

Adverse Analytical Finding: A report from a *WADA*-accredited laboratory or other *WADA*-approved laboratory that, consistent with the *International Standard* for Laboratories, establishes in a *Sample* the presence of a *Prohibited Substance* or its *Metabolites* or *Markers* or evidence of the *Use* of a *Prohibited Method*.

Adverse Passport Finding: A report identified as an *Adverse Passport Finding* as described in the applicable *International Standards*.

Aggravating Circumstances: Circumstances involving, or actions by, an *Athlete* or other *Person* which may justify the imposition of a period of *Ineligibility* greater than the standard sanction. Such circumstances and actions shall include, but are not limited to: the *Athlete* or other *Person Used* or *Possessed* multiple *Prohibited Substances* or *Prohibited Methods*, *Used* or *Possessed* a *Prohibited Substance* or *Prohibited Method* on multiple occasions or committed multiple other anti-doping rule violations; a normal individual would be likely to enjoy the performance-enhancing effects of the anti-doping rule violation(s) beyond the otherwise applicable period of *Ineligibility*; the *Athlete* or *Person* engaged in deceptive or obstructive conduct to avoid the detection or adjudication of an anti-doping rule violation; or the *Athlete* or other *Person* engaged in *Tampering* during *Results Management* or the hearing process. For the avoidance of doubt, the examples of circumstances and conduct described herein are not exclusive and other similar circumstances or conduct may also justify the imposition of a longer period of *Ineligibility*.

Anti-Doping Activities: Anti-doping *Education* and information, test distribution planning, maintenance of a *Registered Testing Pool*, managing *Athlete Biological Passports*, conducting *Testing*, organizing analysis of *Samples*, gathering of intelligence and conduct of investigations, processing of *TUE* applications, *Results Management*, hearings, monitoring and enforcing compliance with any *Consequences* imposed, and all other activities related to anti-doping to be carried out by or on behalf of an *Anti-Doping Organization*, as set out in the *Code* and/or the *International Standards*.

Anti-Doping Organization: *WADA* or a *Signatory* that is responsible for adopting rules

CamScanner

for initiating, implementing or enforcing any part of the *Doping Control* process. This includes, for example, the International Olympic Committee, the International Paralympic Committee, other *Major Event Organizations* that conduct *Testing* at their *Events*, International Federations, and *National Anti-Doping Organizations.*

Athlete: Any *Person* who competes in sport at the international level (as defined by each International Federation) or the national level (as defined by each *National Anti-Doping Organization*). An *Anti-Doping Organization* has discretion to apply anti-doping rules to an *Athlete* who is neither an *International-Level Athlete* nor a *National-Level Athlete*, and thus to bring them within the definition of "*Athlete*". In relation to *Athletes* who are neither *International-Level* nor *National-Level Athletes*, an *Anti-Doping Organization* may elect to: conduct limited *Testing* or no *Testing* at all; analyze *Samples* for less than the full menu of *Prohibited Substances*; require limited or no whereabouts information; or not require advance *TUEs*. However, if an Article 2.1, 2.3 or 2.5 anti-doping rule violation is committed by any *Athlete* over whom an *Anti-Doping Organization* has elected to exercise its authority to test and who competes below the international or national level, then the *Consequences* set forth in the *Code* must be applied. For purposes of Article 2.8 and Article 2.9 and for purposes of anti-doping information and *Education*, any *Person* who participates in sport under the authority of any *Signatory*, government, or other sports organization accepting the *Code* is an *Athlete*.

Athlete Biological Passport: The Programme and methods of gathering and collating data as described in the *International Standard* for *Testing* and Investigations and *International Standard* for Laboratories.

Athlete Support Personnel: Any coach, trainer, manager, agent, team staff, official, medical, paramedical personnel, parent or any other *Person* working with, treating or assisting an *Athlete* participating in or preparing for sports competition.

Attempt: Purposely engaging in conduct that constitutes a substantial step in a course of conduct planned to culminate in the commission of an anti-doping rule violation. Provided, however, there shall be no anti-doping rule violation based solely on an *Attempt* to commit a violation if the *Person* renounces the *Attempt* prior to it being discovered by a third party not involved in the *Attempt*.

Atypical Finding: A report from a *WADA*-accredited laboratory or other *WADA*-approved laboratory which requires further investigation as provided by the *International Standard* for Laboratories or related *Technical Documents* prior to the determination of an *Adverse Analytical Finding*.

Atypical Passport Finding: A report described as an *Atypical Passport Finding* as described in the applicable *International Standards*.

CAS: The Court of Arbitration for Sport.

Code: The World Anti-Doping *Code*.

Competition: A single race, match, game or singular sport contest. For example, a basketball game or the finals of the Olympic 100-meter race in athletics.

Consequences of Anti-Doping Rule Violations ("*Consequences*"): An *Athlete's* or other *Person's* violation of an anti-doping rule may result in one or more of the following: (a) *Disqualification* means the *Athlete's* results in a particular *Competition* or *Event* are invalidated, with all resulting *Consequences* including forfeiture of any medals, points and prizes; (b) *Ineligibility* means the *Athlete* or other *Person* is barred on account of an anti-doping rule violation for a specified period of time from participating in any *Competition* or other activity or funding as provided in Article 10.14; (c) *Provisional Suspension* means the *Athlete* or other *Person* is

CamScanner

barred temporarily from participating in any *Competition* or activity prior to the final decision at a hearing conducted under Article 8; (d) *Financial Consequences* means a financial sanction imposed for an anti-doping rule violation or to recover costs associated with an anti-doping rule violation; and (e) *Public Disclosure* means the dissemination or distribution of information to the general public or *Persons* beyond those *Persons* entitled to earlier notification in accordance with Article 14. Teams in *Team Sports* may also be subject to *Consequences* as provided in Article 11.

Contaminated Product: A product that contains a *Prohibited Substance* that is not disclosed on the product label or in information available in a reasonable Internet search.

Decision Limit: The value of the result for a threshold substance in a *Sample*, above which an *Adverse Analytical Finding* shall be reported, as defined in the *International Standard* for Laboratories.

Delegated Third Party: Any *Person* to which ISSF delegates any aspect of *Doping Control* or anti-doping *Education* Programmes including, but not limited to, third parties or other *Anti-Doping Organizations* that conduct *Sample* collection or other *Doping Control* services or anti-doping *Educational* Programmes for ISSF, or individuals serving as independent contractors who perform *Doping Control* services for ISSF (e.g., non-employee *Doping Control* officers or chaperones). This definition does not include *CAS*.

Disqualification: See *Consequences of Anti-Doping Rule Violations* above.

Doping Control: All steps and processes from test distribution planning through to ultimate disposition of any appeal and the enforcement of *Consequences*, including all steps and processes in between, including but not limited to *Testing*, investigations, whereabouts, *TUEs*, *Sample* collection and handling, laboratory analysis, *Results Management*, hearings and appeals, and investigations or proceedings relating to violations of Article 10.14 (Status During *Ineligibility* or *Provisional Suspension*).

Education: The process of learning to instill values and develop behaviors that foster and protect the spirit of sport, and to prevent intentional and unintentional doping.

Event: A series of individual *Competitions* conducted together under one ruling body (e.g., the Olympic Games, World Championships of an International Federation, or Pan American Games).

Nota bene: For the purpose of all shooting sport regulatory documents other than these Anti-Doping Rules, the word "Event" still means a completed match with or without Final or Shoot-off, as may be further defined in those ISSF documents.

Event Period: The time between the beginning and end of an *Event*, as established by the ruling body of the *Event*.

Event Venues: Those venues so designated by the ruling body for the *Event*.

Fault: *Fault* is any breach of duty or any lack of care appropriate to a particular situation. Factors to be taken into consideration in assessing an *Athlete's* or other *Person's* degree of *Fault* include, for example, the *Athlete's* or other *Person's* experience, whether the *Athlete* or other *Person* is a *Protected Person*, special considerations such as impairment, the degree of risk that should have been perceived by the *Athlete* and the level of care and investigation exercised by the *Athlete* in relation to what should have been the perceived level of risk. In assessing the *Athlete's* or other *Person's* degree of *Fault*, the circumstances considered must be specific and relevant to explain the *Athlete's* or other *Person's* departure from the expected standard of behavior. Thus, for example, the fact that an *Athlete* would lose the

CamScanner

opportunity to earn large sums of money during a period of *Ineligibility,* or the fact that the *Athlete* only has a short time left in a career, or the timing of the sporting calendar, would not be relevant factors to be considered in reducing the period of *Ineligibility* under Article 10.6.1 or 10.6.2.

Financial Consequences: See *Consequences of Anti-Doping Rule Violations* above.

In-Competition: The period commencing at 11:59 p.m. on the day before a *Competition* in which the *Athlete* is scheduled to participate through the end of such *Competition* and the *Sample* collection process related to such *Competition*.

Independent Observer Programme: A team of observers and/or auditors, under the supervision of *WADA*, who observe and provide guidance on the *Doping Control* process prior to or during certain *Events* and report on their observations as part of *WADA's* compliance monitoring Programme.

Individual Sport: Any sport that is not a *Team Sport.*

Ineligibility: See *Consequences of Anti-Doping Rule Violations* above.

Institutional Independence: Hearing panels on appeal shall be fully independent institutionally from the *Anti-Doping Organization* responsible for *Results Management*. They must therefore not in any way be administered by, connected or subject to the *Anti-Doping Organization* responsible for *Results Management*.

International Event: An *Event* or *Competition* where the International Olympic Committee, the International Paralympic Committee, an International Federation, a *Major Event Organization,* or another international sport organization is the ruling body for the *Event* or appoints the technical officials for the *Event.*

International-Level Athlete: *Athletes* who compete in sport at the international level, as defined by each International Federation, consistent with the *International Standard* for *Testing* and Investigations. For shooting sport, *International-Level Athletes* are defined as set out in the Scope section of the Introduction to these Anti-Doping Rules.

International Standard: A standard adopted by *WADA* in support of the *Code*. Compliance with an *International Standard* (as opposed to another alternative standard, practice or procedure) shall be sufficient to conclude that the procedures addressed by the *International Standard* were performed properly. *International Standards* shall include any *Technical Documents* issued pursuant to the *International Standard*.

Major Event Organizations: The continental associations of *National Olympic Committees* and other international multi-sport organizations that function as the ruling body for any continental, regional or other *International Event*.

Marker: A compound, group of compounds or biological variable(s) that indicates the *Use* of a *Prohibited Substance* or *Prohibited Method.*

Metabolite: Any substance produced by a biotransformation process.

Minimum Reporting Level: The estimated concentration of a *Prohibited Substance* or its *Metabolite(s)* or *Marker(s)* in a *Sample* below which *WADA*-accredited laboratories should not report that *Sample* as an *Adverse Analytical Finding*.

Minor: A natural *Person* who has not reached the age of eighteen (18) years.

National Anti-Doping Organization: The entity(ies) designated by each country as possessing the primary authority and responsibility to adopt and implement anti-doping rules, direct the collection of *Samples*, the management of test results, and

CamScanner

the conduct of hearings at the national level. If this designation has not been made by the competent public authority(ies), the entity shall be the country's *National Olympic Committee* or its designee.

National Event: A sport *Event* or *Competition* involving *International-* or *National-Level Athletes* that is not an *International Event*.

National Federation: A national or regional entity which is a member of or is recognized by ISSF as the entity governing ISSF's sport in that nation or region.

National-Level Athlete: *Athletes* who compete in sport at the national level, as defined by each *National Anti-Doping Organization,* consistent with the *International Standard* for *Testing* and Investigations.

National Olympic Committee: The organization recognized by the International Olympic Committee. The term *National Olympic Committee* shall also include the National Sport Confederation in those countries where the National Sport Confederation assumes typical *National Olympic Committee* responsibilities in the anti-doping area.

No Fault or *Negligence*: The *Athlete* or other *Person's* establishing that he or she did not know or suspect, and could not reasonably have known or suspected even with the exercise of utmost caution, that he or she had *Used* or been administered the *Prohibited Substance* or *Prohibited Method* or otherwise violated an anti-doping rule. Except in the case of a *Protected Person* or *Recreational Athlete*, for any violation of Article 2.1, the *Athlete* must also establish how the *Prohibited Substance* entered the *Athlete's* system.

No Significant Fault or *Negligence*: The *Athlete* or other *Person's* establishing that any *Fault* or negligence, when viewed in the totality of the circumstances and taking into account the criteria for *No Fault* or *Negligence*, was not significant in relationship to the anti-doping rule violation. Except in the case of a *Protected Person* or *Recreational Athlete*, for any violation of Article 2.1, the *Athlete* must also establish how the *Prohibited Substance* entered the *Athlete's* system.

Operational Independence: This means that (1) board members, staff members, commission members, consultants and officials of the *Anti-Doping Organization* with responsibility for *Results Management* or its affiliates (e.g., member federation or confederation), as well as any *Person* involved in the investigation and pre-adjudication of the matter cannot be appointed as members and/or clerks (to the extent that such clerk is involved in the deliberation process and/or drafting of any decision) of hearing panels of that *Anti-Doping Organization* with responsibility for *Results Management* and (2) hearing panels shall be in a position to conduct the hearing and decision-making process without interference from the *Anti-Doping Organization* or any third party. The objective is to ensure that members of the hearing panel or individuals otherwise involved in the decision of the hearing panel, are not involved in the investigation of, or decisions to proceed with, the case.

Out-of-Competition: Any period which is not *In-Competition*.

Participant: Any *Athlete* or *Athlete Support Person*.

Person: A natural *Person* or an organization or other entity.

Possession: The actual, physical *Possession*, or the constructive *Possession* (which shall be found only if the *Person* has exclusive control or intends to exercise control over the *Prohibited Substance* or *Prohibited Method* or the premises in which a *Prohibited Substance* or *Prohibited Method* exists); provided, however, that if the *Person* does not have exclusive control over the *Prohibited Substance* or *Prohibited Method* or the premises in which a *Prohibited Substance* or *Prohibited Method* exists, constructive *Possession* shall only be found if the *Person* knew about the

CamScanner

presence of the *Prohibited Substance* or *Prohibited Method* and intended to exercise control over it. Provided, however, there shall be no anti-doping rule violation based solely on *Possession* if, prior to receiving notification of any kind that the *Person* has committed an anti-doping rule violation, the *Person* has taken concrete action demonstrating that the *Person* never intended to have *Possession* and has renounced *Possession* by explicitly declaring it to an *Anti-Doping Organization*. Notwithstanding anything to the contrary in this definition, the purchase (including by any electronic or other means) of a *Prohibited Substance* or *Prohibited Method* constitutes *Possession* by the *Person* who makes the purchase.

Prohibited List: The List identifying the *Prohibited Substances* and *Prohibited Methods*.

Prohibited Method: Any method so described on the *Prohibited List*.

Prohibited Substance: Any substance, or class of substances, so described on the *Prohibited List*.

Protected Person: An *Athlete* or other natural *Person* who at the time of the anti-doping rule violation: (i) has not reached the age of sixteen (16) years; (ii) has not reached the age of eighteen (18) years and is not included in any *Registered Testing Pool* and has never competed in any *International Event* in an open category; or (iii) for reasons other than age has been determined to lack legal capacity under applicable national legislation.

Provisional Hearing: For purposes of Article 7.4.3, an expedited abbreviated hearing occurring prior to a hearing under Article 8 that provides the *Athlete* with notice and an opportunity to be heard in either written or oral form.

Provisional Suspension: See *Consequences of Anti-Doping Rule Violations* above.

Publicly Disclose: See *Consequences of Anti-Doping Rule Violations* above.

Recreational Athlete: A natural *Person* who is so defined by the relevant *National Anti-Doping Organization*; provided, however, the term shall not include any *Person* who, within the five (5) years prior to committing any anti-doping rule violation, has been an *International-Level Athlete* (as defined by each International Federation consistent with the *International Standard* for *Testing* and Investigations) or *National-Level Athlete* (as defined by each *National Anti-Doping Organization* consistent with the *International Standard* for *Testing* and Investigations), has represented any country in an *International Event* in an open category or has been included within any *Registered Testing Pool* or other whereabouts information pool maintained by any International Federation or *National Anti-Doping Organization*.

Regional Anti-Doping Organization: A regional entity designated by member countries to coordinate and manage delegated areas of their national anti-doping Programmes, which may include the adoption and implementation of anti-doping rules, the planning and collection of *Samples*, the management of results, the review of *TUEs*, the conduct of hearings, and the conduct of *Educational* Programmes at a regional level.

Registered Testing Pool: The pool of highest-priority *Athletes* established separately at the international level by International Federations and at the national level by *National Anti-Doping Organizations,* who are subject to focused *In-Competition* and *Out-of-Competition Testing* as part of that International Federation's or *National Anti-Doping Organization's* test distribution plan and therefore are required to provide whereabouts information as provided in Article 5.5 and the *International Standard* for *Testing* and Investigations.

Results Management: The process encompassing the timeframe between notification as per Article 5 of the *International Standard* for *Results Management*, or in certain

CamScanner

cases (e.g., *Atypical Finding*, *Athlete Biological Passport*, whereabouts failure), such pre-notification steps expressly provided for in Article 5 of the *International Standard* for *Results Management*, through the charge until the final resolution of the matter, including the end of the hearing process at first instance or on appeal (if an appeal was lodged).

Sample or *Specimen*: Any biological material collected for the purposes of *Doping Control*.

Signatories: Those entities accepting the *Code* and agreeing to implement the *Code*, as provided in Article 23 of the *Code*.

Specified Method: See Article 4.2.2.

Specified Substance: See Article 4.2.2.

Strict Liability: The rule which provides that under Article 2.1 and Article 2.2, it is not necessary that intent, *Fault*, negligence, or knowing *Use* on the *Athlete's* part be demonstrated by the *Anti-Doping Organization* in order to establish an anti-doping rule violation.

Substance of Abuse: See Article 4.2.3.

Substantial Assistance: For purposes of Article 10.7.1, a *Person* providing *Substantial Assistance* must: (1) fully disclose in a signed written statement or recorded interview all information he or she possesses in relation to anti-doping rule violations or other proceeding described in Article 10.7.1.1, and (2) fully cooperate with the investigation and adjudication of any case or matter related to that information, including, for example, presenting testimony at a hearing if requested to do so by an *Anti-Doping Organization* or hearing panel. Further, the information provided must be credible and must comprise an important part of any case or proceeding which is initiated or, if no case or proceeding is initiated, must have provided a sufficient basis on which a case or proceeding could have been brought.

Tampering: Intentional conduct which subverts the *Doping Control* process, but which would not otherwise be included in the definition of *Prohibited Methods*. *Tampering* shall include, without limitation, offering or accepting a bribe to perform or fail to perform an act, preventing the collection of a *Sample*, affecting or making impossible the analysis of a *Sample*, falsifying documents submitted to an *Anti-Doping Organization* or *TUE* committee or hearing panel, procuring false testimony from witnesses, committing any other fraudulent act upon the *Anti-Doping Organization* or hearing body to affect *Results Management* or the imposition of *Consequences*, and any other similar intentional interference or *Attempted* interference with any aspect of *Doping Control*.

Target Testing: Selection of specific *Athletes* for *Testing* based on criteria set forth in the *International Standard* for *Testing* and Investigations.

Team Sport: A sport in which the substitution of players is permitted during a *Competition*.

Technical Document: A document adopted and published by *WADA* from time to time containing mandatory technical requirements on specific anti-doping topics as set forth in an *International Standard*.

Testing: The parts of the *Doping Control* process involving test distribution planning, *Sample* collection, *Sample* handling, and *Sample* transport to the laboratory.

Testing Pool: The tier below the *Registered Testing Pool* which includes *Athletes* from whom some whereabouts information is required in order to locate and *Test* the *Athlete Out-of-Competition*.

CamScanner

Therapeutic Use Exemption (TUE): A *Therapeutic Use Exemption* allows an *Athlete* with a medical condition to use a *Prohibited Substance* or *Prohibited Method*, but only if the conditions set out in Article 4.4 and the *International Standard* for *Therapeutic Use Exemptions* are met.

Trafficking: Selling, giving, transporting, sending, delivering or distributing (or *Possessing* for any such purpose) a *Prohibited Substance* or *Prohibited Method* (either physically or by any electronic or other means) by an *Athlete*, *Athlete Support Person* or any other *Person* subject to the authority of an *Anti-Doping Organization* to any third party; provided, however, this definition shall not include the actions of bona fide medical personnel involving a *Prohibited Substance* used for genuine and legal therapeutic purposes or other acceptable justification, and shall not include actions involving *Prohibited Substances* which are not prohibited in *Out-of-Competition Testing* unless the circumstances as a whole demonstrate such *Prohibited Substances* are not intended for genuine and legal therapeutic purposes or are intended to enhance sport performance.

UNESCO Convention: The International Convention against Doping in Sport adopted by the 33rd session of the UNESCO General Conference on 19 October 2005 including any and all amendments adopted by the States Parties to the Convention and the Conference of Parties to the International Convention against Doping in Sport.

Use: The utilization, application, ingestion, injection or consumption by any means whatsoever of any *Prohibited Substance* or *Prohibited Method*.

WADA: The World Anti-Doping Agency.

Without Prejudice Agreement: For purposes of Articles 10.7.1.1 and 10.8.2, a written agreement between an *Anti-Doping Organization* and an *Athlete* or other *Person* that allows the *Athlete* or other *Person* to provide information to the *Anti-Doping Organization* in a defined time-limited setting with the understanding that, if an agreement for *Substantial Assistance* or a case resolution agreement is not finalized, the information provided by the *Athlete* or other *Person* in this particular setting may not be used by the *Anti-Doping Organization* against the *Athlete* or other *Person* in any *Results Management* proceeding under the *Code*, and that the information provided by the *Anti-Doping Organization* in this particular setting may not be used by the *Athlete* or other *Person* against the *Anti-Doping Organization* in any *Results Management* proceeding under the *Code*. Such an agreement shall not preclude the *Anti-Doping Organization*, *Athlete* or other *Person* from using any information or evidence gathered from any source other than during the specific time-limited setting described in the agreement.

CamScanner

6
GENERAL TECHNICAL RULES

CamScanner

6.1 **GENERAL** 180
6.2 **SAFETY** 182
6.3 **TARGETS AND TARGET STANDARDS** 184
6.4 **RANGES AND OTHER FACILITIES** 198
6.5 **GAUGES AND INSTRUMENTS** 221
6.6 **CHAMPIONSHIP ADMINISTRATION** 223
6.7 **COMPETITION CLOTHING AND EQUIPMENT** 227
6.8 **COMPETITION JURY DUTIES AND FUNCTIONS** 231
6.9 **ORGANIZING COMMITTEE COMPETITION OFFICIALS** 232
6.10 **EST COMPETITION OPERATIONS** 233
6.11 **COMPETITION PROCEDURES (SEE ALSO 6.17, FINALS COMPETITION PROCEDURES)** 238
6.12 **RULES OF CONDUCT FOR ATHLETES AND OFFICIALS** 250
6.13 **MALFUNCTIONS** 253
6.14 **SCORING AND RESULTS PROCEDURES** 254
6.15 **TIE-BREAKING** 256
6.16 **PROTESTS AND APPEALS** 256
6.17 **FINALS IN OLYMPIC RIFLE AND PISTOL EVENTS** 258
6.18 **RIFLE AND PISTOL MIXED TEAM EVENTS** 275
6.19 **FINALS IN OLYMPIC SHOTGUN EVENTS** 281
6.20 **SHOTGUN SKEET MIXED TEAM EVENT** 287
6.21 **FORMS** 293
6.22 **THE ISSF DRESS CODE** 302
6.23 **INDEX** 306
1 **PAPER TARGETS AND SCORING GAUGES** 320
2 **RANGE AND FIRING POINT EQUIPMENT** 325
3 **COMPETITION OFFICIALS DUTIES** 327
4 **COMPETITION PROCEDURES** 328
5 **SCORING PROCEDURES** 329
6 **300M SCORING AND MARKING PROCEDURES** 333

RULE NUMBERING

All ISSF Rules are numbered according to a rule numbering protocol that limits rule numbers to four (4) levels (i.e. 6.10.3.5). If a fifth level is used, those rules are designated with the letters a), b), c), etc.

CamScanner

Definitions and Abbreviations

The following are definitions of special terms and abbreviations that are used in the ISSF General Technical Rules and the ISSF Rifle, Pistol, Shotgun, Running Target and Target Sprint Rules.

Term	Definition
Athletes	Competitors or participants in a sports competition.
Bib Number/ Start Number	Every athlete entered in Championships is issued a unique Bib or Start Number. These numbers are used to identify and track competitors and must be worn on the athletes' backs during training and competition.
Championship	A single organized shooting competition with a programme of events. A Championship (capital C) is a competition that is authorized and supervised by ISSF rules, Technical Delegates, Juries and anti-doping controls.
Competition	A general reference to a sports contest that may include a series of events (Championship) or may be a contest within a single event.
Course of Fire	A description of the stages of competition within an event that specifies the number of shots in each series and stage, the type of firing and the time limits.
CRO	Chief Range Officer
Discipline	A sub-group of events within a sport that have common characteristics. Shooting has five (5) disciplines: 1) Rifle, 2) Pistol, 3) Shotgun, 4) Running Target and 5) Target Sprint.
EST	Electronic scoring target(s)
Event	A unique shooting contest with a specific course of fire and rules of conduct.
Final	The Final is the last stage of a competition event. In an Individual Final, the best eight athletes in the Qualification have a new (start-from-zero) competition to decide their final ranking and medals.
FOP	Field of Play. In shooting, the FOP includes the area behind the firing line where access is restricted to competing athletes and on duty officials, the firing line or shooting stations and the downrange area that includes the targets and backstops or safety zone.
MATCH Shots	All shots that count in an athlete's score.
MQS	Minimum Qualification Score
Min.	Minute, minutes
Olympic Event	A Shooting sport event accepted by the International Olympic Committee for inclusion in the respective Olympic programme. Shooting has 15 Olympic events. Each Olympic event has a Qualification and a Final.
Open Events	Events in which all athletes can compete with no gender or age limitations.
PET	Pre-Event Training

CamScanner

Term	Definition
Ranking Lists	There are two Ranking Lists based on athlete performance at ISSF Championships. 1. World Ranking, based on athlete's achievements, during the calendar year, at ISSF Championships 2. Qualification Ranking for Olympic Games, based on athlete's achievements at ISSF qualifying competitions, during the Olympic Qualifying period, approved by the IOC.
RTS	Results, Timing and Scoring. The RTS process is a part of competition operations that involves the preparation of start lists, target scoring, resolving scoring issues and the preparation and publication of results lists.
Round	A phase of competition within a shooting event. Shooting events may have Elimination Rounds, Qualification Rounds and Finals. In Shotgun events, a "round" may also refer to a series of 25 targets/doubles.
Sec.	Second, seconds
Series	A sequence of shots fired within a stage or course of fire.
Sighting Shots	Practice or warm-up shots that are fired in a shooting event prior to MATCH shots.
Sport	A distinct grouping of competitive events with common elements and a single governing body. Shooting (capital S) is a "sport" where athletes in different events fire guns at targets that rank competing athletes according to their scores. The IOC recognizes shooting as one of 28 Core Summer Olympic sports.
Sport Presentation	Visual, audio and information enhancements such as announcements, music, colour and educational media that are used in the conduct of Shooting events to make them more interesting and informative for spectator and TV audiences.
Squadding	The assignment of athletes entered in a Shotgun event, to relays and firing points in Rifle-Pistol events or the assignment of athletes to specific squads in Shotgun events. This process enables the production of Start Lists.
Stage	A phase or part of an event. Course of fire. A 3-Position Rifle event has three stages, one for each position. The 25m Pistol Women event has two stages, precision and rapid fire.
Start List	Official documents produced in competitions that list all competitors entered in an event. according to an athlete's relay and firing point or squad and position in the squad.
Start Time	The Start Time in each shooting event is the time when commands for the first MATCH shot begin.
Team Events	The ISSF recognizes team events. These team events establish rankings based on the total scores fired by three athletes. Mixed Team events have one man and one woman, both from the same country.

CamScanner

ISSF RECOGNIZED SHOOTING EVENTS

These tables list ISSF-recognized Shooting events and their status as approved by the International Olympic Committee and/or the ISSF General Assembly (1.6.7.7) together with basic technical details regarding their competition formats and numbers of shots in each competition stage as approved by the ISSF Administrative Council (1.7.2.5).

In ISSF Championships, events for Men, Men Junior, Women and Women Junior may have individual competition only or individual and team (3 persons) and Mixed Team competitions as stated in these Regulations and the Competition Programme (3.7).

Status indicates the recognition status for each event:

a) M = the event is recognized as a men's event.

b) W = the event is recognized as a women's event.

c) MJ = the event is recognized as a men junior event.

d) WJ = the event is recognized as a women junior event.

e) Olympic = the event is recognized by the IOC for inclusion in the Olympic Programme.

f) WCH = the event is a mandatory World Championship event.

g) WCHS = the event is a separable World Championship event that can be organized in a separate WCH if it cannot be included in a regular WCH (see 3.3.6.3 and 3.3.6.4).

h) Olympic events have a Qualification and Final. Non-Olympic events have only a "full programme" with an optional Final.

i) Technical Rules for all ISSF events are found in the General Technical Rules and in the Rifle, Pistol, Shotgun, Running Target and Target Sprint Rules (7.0, 8.0, 9.0, 10.0 and 11.0)

j) Technical Rules for Rifle and Pistol Finals are found in 6.17; Rules for Shotgun Finals are found in 6.19; Rules for Running Target Medal Matches are found in 10.8.

k) Technical Rules for the Mixed Team events are found in 6.18 & 6.20

CamScanner

EVENTS FOR MEN AND MEN JUNIOR				
Event Name	**Abbrev.**	Status	**Qualification or Full Programme**	**Final**
10m Air Rifle (standing)	AR60	M, MJ, Olympic, WCH	60 Shots	24shots
50m Rifle 3-Positions (kneeling, prone, standing)	FR3X20	M, MJ, Olympic, WCH	3 x 20 shots	45 shots
50m Rifle Prone	FR60PR	M, MJ, WCH	60 shots	
300m Rifle 3-Positions (knee- ling, prone, standing)	300FR3X20	M, WCHS	3 x 20 shots	
300m Standard Rifle 3-Positions (kneeling, prone, standing)	300STR3X20	M, WCHS	3 x 20 shots	
300m Rifle Prone	300FR60PR	M, WCHS	60 shots	
10m Air Pistol	AP60	M, MJ, Olympic, WCH	60 shots	24 shots
25m Rapid Fire Pistol (8, 6 and 4 second series)	RFP	M, MJ, Olympic WCH	30 + 30 shots	40 shots
25m Standard Pistol (150, 20 and 10sec. series)	STP	M, MJ, WCH	20 + 20 + 20 shots	
25m Centre Fire Pistol (precision and rapid-fire series)	CFP	M only, WCH	30 + 30 shots	
25m Pistol (precision and rapid- fire series)	SPM	MJ only, WCH	30 + 30 shots	
50m Pistol	FP	M, MJ, WCH	60 shots	
Trap	TR125	M, MJ, Olympic, WCH	125 targets	50 targets max.
Skeet	SK125	M, MJ, Olympic, WCH	125 targets	60 targets max.
Double Trap	DT150	M, MJ, WCH	150 targets	
10m Running Target (slow and fast runs)	10RT	M, MJ, WCHS	30 + 30 shots Medal Match (see 10.8)	
10m Running Target Mixed (slow and fast runs)	10RTMIX	M, MJ, WCHS	40 shots mixed	
50m Running Target (slow and fast runs)	50RT	M, MJ, WCHS	30 + 30 shots	
50m Running Target Mixed (slow and fast runs)	50RTMIX	M, MJ, WCHS	40 shots mixed	

CamScanner

EVENTS FOR WOMEN AND WOMEN JUNIOR				
Event Name	**Abbrev.**	**Status**	**Qualification or Full Program**	**Final**
10m Air Rifle (standing)	AR60W	W, WJ, Olympic, WCH	60 Shots	24 shots
50m Rifle 3-Positions (kneeling, prone and standing)	R3X20	W, WJ, Olympic, WCH	3 x 20 shots	45 shots
50m Rifle Prone	R60PR	W, WJ, WCH	60 shots	
300m Rifle 3-Positions (knee- ling, prone and standing)	300R3X20	W, WCHS	3 x 20 shots	
300m Rifle Prone	300R60PR	W, WCHS	60 shots	
10m Air Pistol	AP60W	W, WJ, Olympic, WCH	60 shots	24 shots
25m Pistol (precision and rapid- fire series)	SP	W, WJ, Olympic, WCH	30 + 30 shots	50 shots
Trap	TR125W	W, WJ, Olympic, WCH	125 targets	50 targets max.
Double Trap	DT150W	W, WJ	150 targets	
Skeet	SK125W	W, WJ, Olympic, WCH	125 targets	60 targets max.
10m Running Target (slow and fast runs)	10RTW	W, WJ, WCHS	30 + 30 shots Medal Match (see 10.8)	
10m Running Target Mixed (slow and fast runs)	10RTMIXW	W, WJ, WCHS	40 shots mixed	

MIXED TEAM EVENTS FOR ONE MAN AND ONE WOMAN				
Event Name	**Abbrev.**	**Status**	**Qualification**	**Final**
10m Air Rifle (standing)	ARMIX	M+W, MJ+WJ	30 shots each athlete	Final Stages 1 & 2, the MT to reach 16 points wins
10m Air Pistol	APMIX	M+W, MJ+WJ	30 shots each athlete	Final Stage 1 & 2, the MT to reach 16 points wins
Trap	TRMIX	M+W, MJ+WJ	75 each athlete	No Final
Skeet	SKMIX	M+W, MJ+WJ	75 each athlete	Final Stage 1 & 2, 24 shots each athlete = 48 Max.
Other Mixed Team events may be included in ISSF Championships with the approval of the Executive Committee.				

CamScanner

6.1 GENERAL

6.1.1 Objective and Purpose of ISSF Rules

The ISSF establishes Technical Rules for the shooting sport to govern the conduct of shooting events recognized by the ISSF (ISSF General Regulations, 3). The objective of ISSF Technical Rules is to achieve uniformity in the conduct of the ISSF Championships and those Competitions authorised by the ISSF. Olympic Games shooting events are authorised by the IOC. They apply to shooting sport throughout the world and to promote the development of the sport.

a) **ISSF General Technical Rules** include rules for range construction, targets, scoring and specific competition procedures for all shooting disciplines. Discipline Rules apply specifically to the five (5) shooting disciplines: Rifle, Pistol, Shotgun, Running Target and Target Sprint;

b) **ISSF General Technical and Discipline Rules** are approved by the ISSF Administrative Council in accordance with the ISSF Constitution;

c) **ISSF General Technical and Discipline Rules** are subordinate to the ISSF Constitution and the ISSF General Regulations; and

d) **ISSF General Technical and Discipline Rules** are approved to be effective for a period of four (4) years beginning on 1 January of the year following the Olympic Games. Except in special situations, ISSF Rules are not changed during this four (4) year period.

6.1.2 Application of ISSF General Technical and Discipline Rules

a) ISSF Championships are shooting sport competitions in the Olympic Games, World Championships, World Cups, World Cup Finals, Continental Championships, Continental Games, Junior World Championships and Junior World Cups that are supervised by the ISSF in accordance with the ISSF General Regulations, 3.2.1, and these Rules;

b) The ISSF, with the approval of the Executive Committee, may designate other competitions that fulfil ISSF standards for supervision (i.e. Technical Delegate, Juries, doping control, entry procedures, results management, etc.) as competitions where MQS/RPO scores may be obtained and where World Records may be established, for instance, Grand Prix competitions.

c) ISSF General Technical and Discipline Rules must govern all ISSF Championships;

d) The ISSF recommends that ISSF Rules should also be used to govern regional, national and other competitions that are not ISSF Championships, but where ISSF events are on the programme;

f) All competition officials, athletes, coaches and team leaders must be familiar with the ISSF Rules and must ensure that they are enforced;

g) It is the responsibility of every athlete to comply with these Rules;

h) When a Rule refers to right-handed athletes, the reverse of that Rule applies to left-handed athletes; and

i) Unless a Rule applies specifically to a men’s or women’s event, it must apply uniformly to both men’s and women’s events.

CamScanner

j) Where diagrams and tables in these rules contain specific information, the specific information in these diagrams and tables has the same authority as the numbered rules.

6.1.3 **Scope of ISSF Technical Rules**

ISSF Technical Rules include:

a) Rules for the preparation and organization of ISSF Championships;

b) Rules that apply to all shooting disciplines or more than one shooting discipline (General Technical Rules); and

c) Rules that apply to one shooting discipline (Special Technical Rules).

6.1.4 **Uniform Standard for Equipment and Clothing**

Shooting is a sport where equipment and clothing play critical roles in the conduct of the sport. Athletes must use only equipment and clothing that complies with ISSF Rules. Any gun, device, equipment, accessory or other item that may give an athlete an unfair advantage over others and that is not specifically mentioned in these Rules, or that is contrary to the spirit of these Rules, is prohibited. ISSF Rules for equipment and clothing are strictly enforced (see 6.7.9) to ensure that no athletes have equipment, clothing or accessories that give them an unfair advantage over other athletes.

6.1.5 **Organization and Supervision of ISSF Championships**

6.1.5.1 **ISSF Supervision.** The ISSF Executive Committee appoints ISSF Technical Delegates, Jury Members and technical officials for every ISSF Championship in accordance with 1.8.2.6 and 3.4. These appointments include:

a) Technical Delegate(s);

b) Competition/Equipment Control/RTS Juries;

c) A Jury of Appeal may be appointed, otherwise the Technical Delegate can appoint a Jury of Appeal as and when required.

d) An Official Results Provider responsible for providing and operating the electronic technology necessary for the management of entries, athletes' results, competition operations, results presentation and results archiving.

6.1.5.2 **Organizing Committee.** An Organizing Committee must be formed for every ISSF Championship in accordance with 3.4.1. The Organizing Committee is responsible for the preparation, administration and conduct of the shooting competitions. The Organizing Committee must, in cooperation with the ISSF, appoint:

a) Chief Range Officer(s), Range Officers, a Chief of Referees and Referees, as appropriate, who are responsible for the actual conduct of the shooting events;

b) A Chief RTS (Results Timing and Scoring) Officer and necessary assistants to establish a RTS Office responsible for entries, accreditation, scoring and results operations during the Championship;

c) A Chief of Equipment Control and appropriate Equipment Control Officers who are responsible for Equipment Control operations; and

d) All other staff necessary to fulfil their responsibilities as an ISSF Championship Organizer.

CamScanner

6.2 SAFETY

SAFETY IS OF PARAMOUNT IMPORTANCE

6.2.1 General Safety Rules

6.2.1.1 ISSF Rules establish specific safety requirements that must be applied in all ISSF Championships. ISSF Juries and Organizing Committees are responsible for safety.

6.2.1.2 Necessary and special safety regulations for ranges differ from country to country so additional safety rules may be established by the Organizing Committee. Juries, range officials, team officials and athletes must be advised of any special safety regulations in the competition programme.

6.2.1.3 The safety of athletes, range officials and spectators, requires continued and careful attention to gun handling. It is the duty of range officials to enforce gun safety and the duty of athletes and team officials to apply all gun safety and gun handling rules.

6.2.1.4 The ISSF may refuse to accept the entry of an athlete in a competition if it has substantial information from competent authorities that such an athlete presents a serious threat to the safety of others on a shooting range.

6.2.1.5 In the interest of safety, a Jury Member or Range Officer may stop shooting at any time. Athletes and team officials must immediately notify Range Officers or Jury Members of any situation that may be dangerous.

6.2.1.6 An Equipment Control Officer, Range Officer or Jury Member may pick up an athlete's equipment (including a gun) for control without his permission, but in his presence and with his knowledge. However, immediate action must be taken when a matter of safety is involved.

6.2.2 Gun Handling Rules

6.2.2.1 To ensure safety, all guns must be handled with maximum care at all times. Guns must not be removed from the firing line during training or competition except with the permission of a Range Officer.

6.2.2.2 Safety flags constructed of fluorescent orange or a similar bright material must be inserted in all rifles, pistols and semi-automatic shotguns at all times except when safety flag removal is authorized by these rules. To demonstrate that air guns are unloaded, safety flags (safety lines) must be long enough to extend through the full length of the barrel. Safety flags for all other guns must have a probe that inserts into the chamber (breech end of barrel) to demonstrate that the chamber is empty. Shotgun actions must be open (broken) to demonstrate that they are unloaded.

a) Safety flags must be inserted in all guns that are not in gun cases or boxes before athletes are called to the line, when leaving a firing point, after firing is completed and when personnel must go forward of the firing line. In Finals, safety flags may not be removed until Preparation and Sighting Times start.

b) If a safety flag is not used as required by this rule, a Jury Member must give a WARNING with instructions to insert a safety flag in the gun; and

c) If the Jury confirms that an athlete refuses to use a safety flag as required by this rule and after being warned, the athlete must be disqualified (DSQ).

6.2.2.3 While athletes are on their firing points, their guns must always be pointed in safe directions. The action or breech must not be closed until the gun is pointing downrange in a safe direction toward the target area.

CamScanner

6.2.2.4 When placing a gun down to leave the firing point or when firing is complete, guns must be unloaded with actions (bolt or locking mechanism) open and safety flags inserted. Before leaving a firing point, the athlete must confirm and the Range Officer **must verify** that there is no cartridge or pellet in the gun's chamber, barrel or magazine and a safety flag is inserted.

6.2.2.5 If the athlete boxes or cases his gun or removes it from the firing point without having it checked by a Range Officer, he may be disqualified if the Jury determines that a significant safety violation is involved.

6.2.2.6 During firing, the gun may be put down (not held) only after the cartridge(s) and/ or magazine are removed and the action is open. Air guns must be made safe by opening the cocking lever or loading port.

6.2.2.7 When any personnel are forward of the firing line, handling guns is not permitted and safety flags must be inserted. If it is necessary for a Jury member, Range Officer or Technical Officer to go forward of the firing line during training, competition or a Final, this must be authorized and controlled by the Chief Range Officer (CRO) and any movement forward of the firing line may only be permitted after all guns have safety flags inserted.

6.2.2.8 In the range, when guns are not on the firing points, they must always be in their cases, unless otherwise authorized by a Range Officer.

6.2.3 **Range Commands**

6.2.3.1 Chief Range Officers, or other appropriate range officials, are responsible for giving the commands **"LOAD," "START," "STOP," "UNLOAD"** and other necessary commands. Range Officers must ensure that the commands are obeyed and that guns are handled safely.

6.2.3.2 Guns and their magazines may only be loaded on the firing point and after the command **"LOAD**" or **"START"** is given. At all other times, guns and magazines must be kept unloaded.

6.2.3.3 Only one cartridge may be loaded in a Rifle or 50m Pistol event if it has a magazine. If a 5-shot Air Pistol is used in a 10m Air Pistol event only one pellet may be loaded.

6.2.3.4 A gun is considered loaded when a cartridge or pellet or a magazine with cartridges contacts a gun. No one may place a cartridge or pellet or magazine with cartridges in or on a gun or its chamber or barrel until the command **"LOAD"** is given.

6.2.3.5 If an athlete fires a shot before the command **"LOAD"** or **"START"** is given, or after the command **"STOP"**, or **"UNLOAD"** is given, he may be disqualified if safety is involved.

6.2.3.6 When the command or signal **"STOP"** is given, shooting must stop immediately. When the command **"UNLOAD**" is given, all athletes must unload their guns and magazines, and make them safe (to unload air guns ask the Range Officer for permission). Shooting may only resume when the command **"START"** is given again.

6.2.4 **Additional Safety Requirements**

6.2.4.1 **Dry Firing** is the release of the cocked trigger mechanism of an unloaded cartridge gun or the release of the trigger mechanism of an air or gas gun fitted with a device which enables the trigger to be operated without releasing the propelling charge (air or gas). Dry firing and aiming exercises are permitted only on the firing line or in a designated area in accordance with these rules.

CamScanner

6.2.4.2 It is the athlete's responsibility to ensure that any air or CO2 cylinder is still within its validity date. This may be checked by Equipment Control.

6.2.5 **Hearing Protection**

All athletes, range officials and other persons in the immediate vicinity of the 25m, 50m and 300m firing lines and all Shotgun ranges must wear ear plugs, ear muffs, or similar ear protection. Notices must be prominently displayed and hearing protection must be available for all persons in the range areas. Hearing protection incorporating any type of sound-enhancing or receiving devices may not be worn by athletes or coaches on the FOP. Competition officials may wear sound-enhancing hearing protection devices or other communication devices on the FOP. Hearing impaired athletes may wear sound-enhancing devices with the approval of the Jury.

6.2.6 **Eye Protection**

All athletes should wear shatterproof shooting glasses or similar eye protection while shooting.

6.3 TARGETS AND TARGET STANDARDS

6.3.1 **General Target Requirements**

6.3.1.1 Targets used in ISSF Championships may be either electronic scoring targets (EST) or paper targets for Rifle and Pistol events or clay targets for Shotgun events. **Note: Specific Rules for paper target operations are now available in the Annex to these Rules, Rules for Paper Target Scoring.**

6.3.1.2 All targets used in ISSF Championships must comply with the scoring ring, dimension or other specifications given in these rules.

6.3.1.3 Samples of clay targets (twenty (20) qualification targets and twenty (20) powder filled Finals targets) that are to be used in ISSF Championships must be submitted to the ISSF Secretary General for testing, verification of specifications and approval at least six (6) months prior to the start of each Championship

6.3.2 **Electronic Scoring Target Requirements**

6.3.2.1 Only EST tested and approved by the ISSF must be used.

6.3.2.2 The accuracy requirement for EST is to score shots to an accuracy of at least one-half of one decimal scoring ring. The tolerances given for scoring ring sizes on paper targets are not applicable to EST.

6.3.2.3 All EST target units must provide a black aiming area corresponding in size to the black areas of the respective competition targets (Rule 6.3.4) and a non-reflective, contrasting white or off-white area surrounding the aiming area.

6.3.2.4 Scores recorded by EST must be determined according to scoring ring dimensions for competition targets (Rule 6.3.4).

6.3.2.5 Every shot hitting an EST must have its result with its location and value displayed on a monitor placed on the firing point.

6.3.2.6 10m EST must use a paper strip or other form of witness strip to allow a determination that a shot fired did, or did not, hit the target.

6.3.2.7 A printout of each athlete's results from a memory source other than the main EST system computer (back-up memory) must be available immediately during and after a competition.

CamScanner

6.3.2.8 When EST are used, the targets must be checked to ensure the targets are scoring correctly under normal conditions of use before each ISSF Championship under the supervision of the Technical Delegate.

6.3.3 **ISSF Target Standards**

Targets must comply with the scoring ring dimensions, tolerances and specifications in this rule.

6.3.3.1 Rifle and Pistol targets may be scored in full ring values or, if ESTs or electronic paper target scoring machines are used, in decimal ring values. Decimal ring scores are determined by dividing the scoring area for one full ring into ten equal scoring rings that are designated with decimal values starting with zero (i.e. 10.0, 9.0, etc.) and ending with nine (i. e. 10.9, 9.9, etc.);

6.3.3.2 Rifle and Pistol Elimination and Qualification Round competitions are scored in full ring values, except that in ISSF Championships, Elimination and Qualification Round competitions for 10m Air Rifle Men and Men Junior, 10m Air Rifle Women and Women Junior, 50m Rifle Prone Men and Men Junior and 50m Prone Women and Women Junior, 10m Air Rifle Mixed Team and Mixed Team Junior events must be scored in decimal values.

6.3.3.3 Rifle and Pistol Finals, Rifle Mixed Team Qualification and Finals and Pistol Mixed Team Finals are scored in decimal values, except that 25m Pistol Finals use hit- miss scoring with hit zones based on decimal values established by these Rules.

CamScanner

6.3.4 Official ISSF Targets

6.3.4.1 300m Rifle Target

10 Ring	100mm	(±0.5mm)	5 Ring	600mm	(±3.0mm)
9 Ring	200mm	(±1.0mm)	4 Ring	700mm	(±3.0mm)
8 Ring	300mm	(±1.0mm)	3 Ring	800mm	(±3.0mm)
7 Ring	400mm	(±3.0mm)	2 Ring	900mm	(±3.0mm)
6 Ring	500mm	(±3.0mm)	1 Ring	1000mm	(±3.0mm)

Inner Ten = 50mm (±0.5mm).

Black from 5 to 10 rings = 600mm (±3.0mm).

Ring Thickness: 0.5mm to 1.0mm.

Minimum visible size of target card: 1300mm x 1300mm (or minimum 1020mm x 1020mm providing the background on which the target is mounted is the same colour as the target).

Scoring ring values 1 – 9 are printed in the scoring zones, in diagonal lines at right angles to each other.

The 10-point zone is not marked with a number.

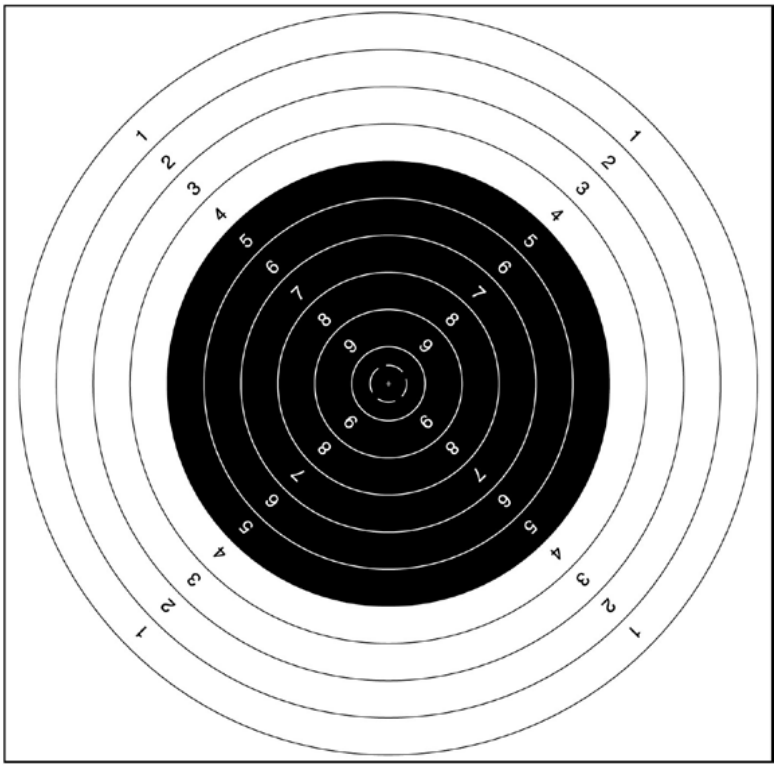

300m Rifle Target

CamScanner

6.3.4.2 **50m Rifle Target**

10 Ring	10.4mm	(±0.1mm)	5 Ring	90.4mm	(±0.5mm)
9 Ring	26.4mm	(±0.1mm)	4 Ring	106.4mm	(±0.5mm)
8 Ring	42.4mm	(±0.2mm)	3 Ring	122.4mm	(±0.5mm)
7 Ring	58.4mm	(±0.5mm)	2 Ring	138.4mm	(±0.5mm)
6 Ring	74.4mm	(±0.5mm)	1 Ring	154.4mm	(±0.5mm)

Inner Ten = 5mm (±0.1mm).

Black from part of 3 to 10 rings = 112.4mm (±0.5mm).

Ring Thickness: 0.2mm to 0.3mm.

Minimum visible size of target card: 250mm x 250mm.

Scoring ring values 1 – 8 are printed in the scoring zones in vertical and horizontal lines, at right angles to each other.

The 9 and 10-point zones are not marked with a number. Insert targets (200mm x 200mm) may be used.

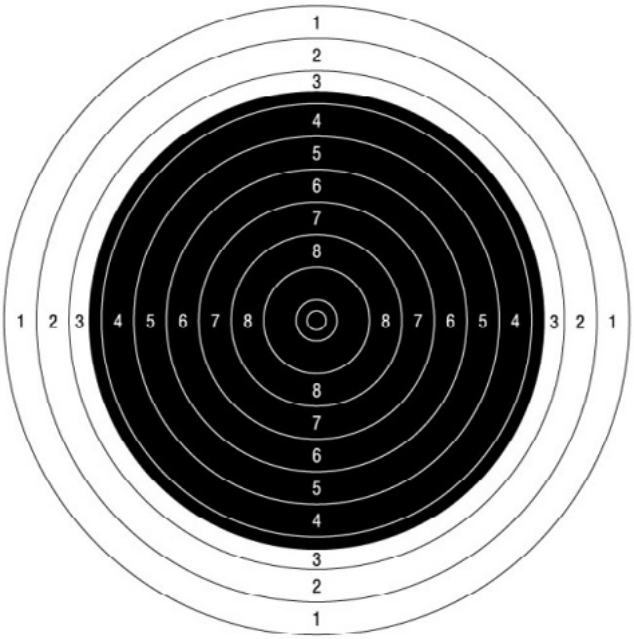

50m Rifle Target

CamScanner

6.3.4.3 **10m Air Rifle Target**

10 Ring	0.5mm	(±0.1mm)	5 Ring	25.5mm	(±0.1mm)
9 Ring	5.5mm	(±0.1mm)	4 Ring	30.5mm	(±0.1mm)
8 Ring	10.5mm	(±0.1mm)	3 Ring	35.5mm	(±0.1mm)
7 Ring	15.5mm	(±0.1mm)	2 Ring	40.5mm	(±0.1mm)
6 Ring	20.5mm	(±0.1mm)	1 Ring	45.5mm	(±0.1mm)

Inner Ten: When the 10 ring (dot) has been shot out completely as determined by the use of an Air Pistol OUTWARD scoring gauge.

Black from 4 to 9 rings = 30.5mm (±0.1mm).

The ten ring is a white dot = 0.5mm (±0.1mm). Ring thickness: 0.1mm to 0.2mm.

Minimum visible size of target card: 80mm x 80mm.

Scoring ring values 1 – 8 are printed in the scoring zones in vertical and horizontal lines, at right angles to each other. The 9 point zone is not marked with a number. The 10 is a white dot.

Background cards 170mm x 170mm, similar in colour to the target material should be provided to improve the visibility of the target.

10m Air Rifle Target

CamScanner

6.3.4.4 **25m Rapid Fire Pistol Target**

(for the 25m Rapid Fire Pistol event and the Rapid Fire stages of the 25m Centre Fire and 25m Pistol events):

10 Ring	100mm	(±0.4mm)	7 Ring	340mm	(±1.0mm)
9 Ring	180mm	(±0.6mm)	6 Ring	420mm	(±2.0mm)
8 Ring	260mm	(±1.0mm)	5 Ring	500mm	(±2.0mm)

Inner Ten: 50mm (±0.2mm).

Black from 5 to 10 rings = 500mm (±2.0mm).

Ring thickness: 0.5mm to 1.0mm.

Minimum visible size of target card: width: 550mm; height: 520mm – 550mm.

Scoring ring values 5 – 9 are printed in the scoring zones, in vertical lines only. The 10 point zone is not marked with a number. The zone numbers must be approximately 5mm high and 0.5mm thick. White horizontal aiming lines replace the ring values at the left and the right side of the target centre. Each of the lines is 125mm long and 5mm wide.

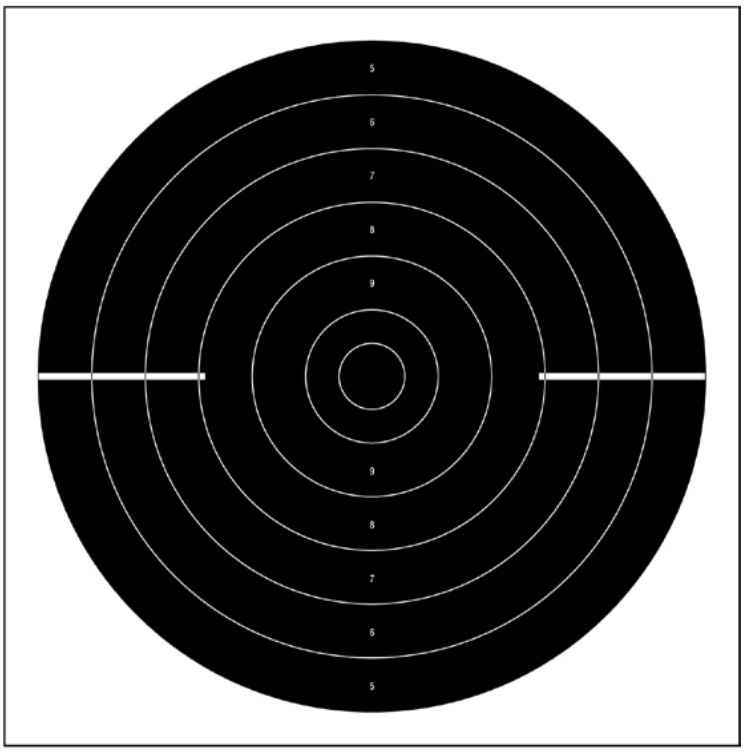

25m Rapid Fire Pistol Target

CamScanner

6.3.4.5 25m Precision and 50m Pistol Target

(for the 50m Pistol and 25m Standard Pistol events and the precision stage of the 25m Centre Fire and the 25m Pistol events)

10 Ring	50mm	(±0.2mm)	5 Ring	300mm	(±1.0mm)
9 Ring	100mm	(±0.4mm)	4 Ring	350mm	(±1.0mm)
8 Ring	150mm	(±0.5mm)	3 Ring	400mm	(±2.0mm)
7 Ring	200mm	(±1.0mm)	2 Ring	450mm	(±2.0mm)
6 Ring	250mm	(±1.0mm)	1 Ring	500mm	(±2.0mm)

Inner ten: 25mm (±0.2mm).

Black from 7 to 10 rings = 200mm (±1.0mm).

Ring thickness: 0.2mm to 0.5mm.

Minimum visible size of target card: width: 550mm;

height: 520mm - 550mm.

Scoring ring values 1 – 9 are printed in the scoring zones, in vertical and horizontal lines, at right angles to each other. The 10-point zone is not marked with a number. Zone numbers must be approximately 10mm high, 1mm thick and must be read easily with normal spotting telescopes at the appropriate distance.

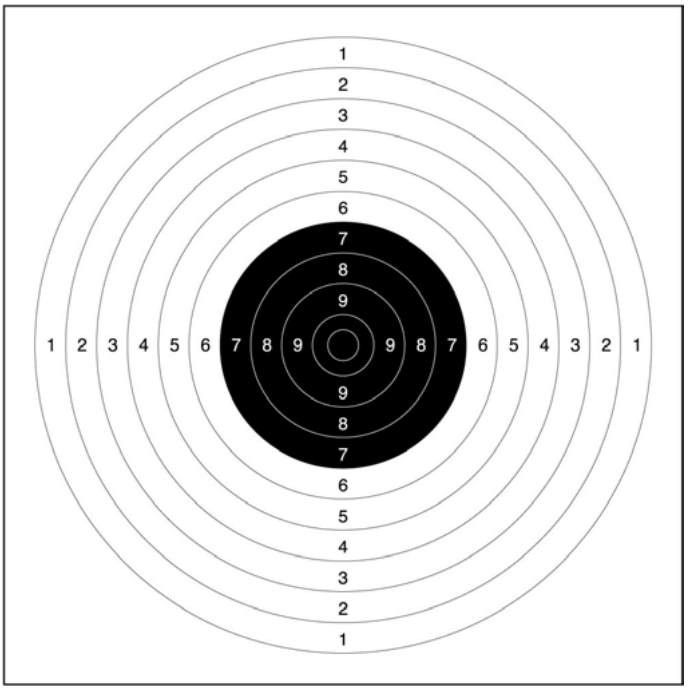

25m Precision and 50m Pistol Target

CamScanner

6.3.4.6 **10m Air Pistol Target**

10 Ring	11.5mm	(±0.1mm)	5 Ring	91.5mm	(±0.5mm)
9 Ring	27.5mm	(±0.1mm)	4 Ring	107.5mm	(±0.5mm)
8 Ring	43.5mm	(±0.2mm)	3 Ring	123.5mm	(±0.5mm)
7 Ring	59.5mm	(±0.5mm)	2 Ring	139.5mm	(±0.5mm)
6 Ring	75.5mm	(±0.5mm)	1 Ring	155.5mm	(±0.5mm)

Inner ten: 5.0mm (±0.1mm).

Black from 7 to 10 rings = 59.5mm (±0.5mm).

Ring thickness: 0.1mm to 0.2mm.

Minimum visible size of target card: 170mm x 170mm.

The scoring ring values 1 to 8 are printed in the scoring zones in vertical and horizontal lines, at right angles to each other. The ten and the nine zones are not marked with a number. The zone numbers must not be more than 2mm high.

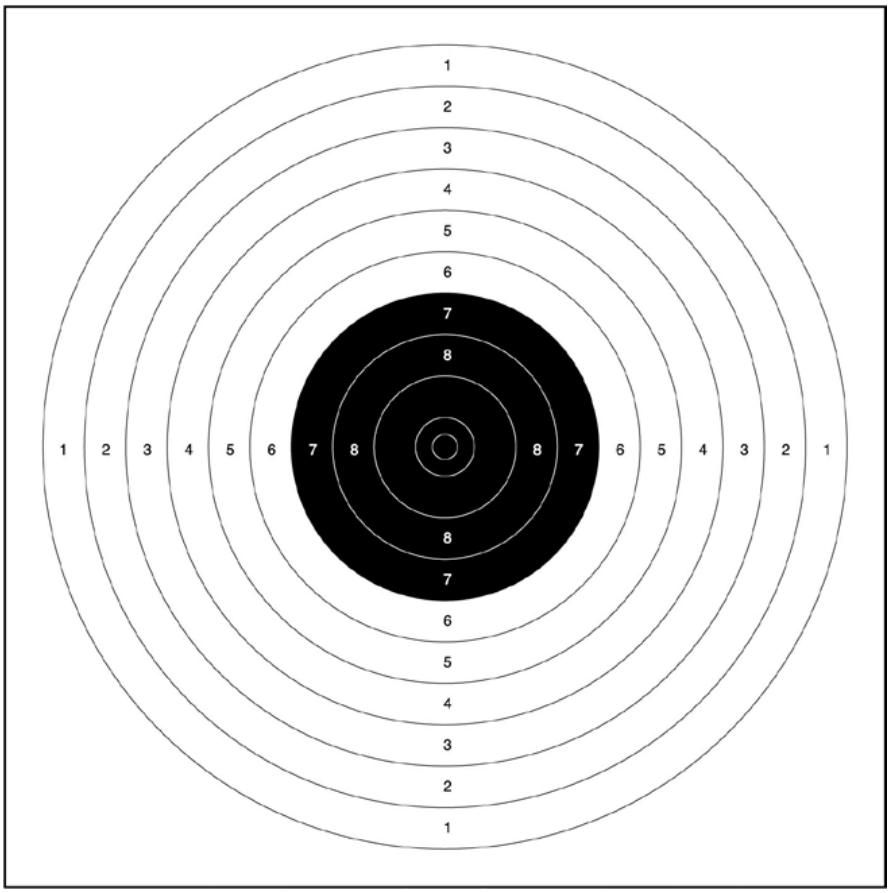

10m Air Pistol Target

CamScanner

6.3.4.7 50m Running Target

The 50m Running Target is a single card with two scoring zones each with rings 1 to 10 on the two sides and a single aiming mark in the centre.

10 Ring	60mm	(±0.2mm)	5 Ring	230mm	(±1.0mm)
9 Ring	94mm	(±0.4mm)	4 Ring	264mm	(±1.0mm)
8 Ring	128mm	(±0.6mm)	3 Ring	298mm	(±1.0mm)
7 Ring	162mm	(±0.8mm)	2 Ring	332mm	(±1.0mm)
6 Ring	196mm	(±1.0mm)	1 Ring	366mm	(±1.0mm)

Inner ten: 30mm (±0.2mm).

Ring thickness: 0.5mm to 1.0mm.

The centre of the 10 ring must be 453mm (±1.0mm) from the centre of the aiming mark measured on a horizontal line.

Scoring ring values 1 to 9 must be printed clearly in the appropriate scoring zones in diagonal lines at right angles to each other.

The aiming mark is black with an outside diameter of 94mm and must include white rings of the size of the 10 (60mm) and a white central dot (15mm).

Repair centres may be used. The repair centres must be correctly placed on the full target.

A single 50m Running Target with two aiming marks, one left and one right of the scoring ring area may be used for ESTs.

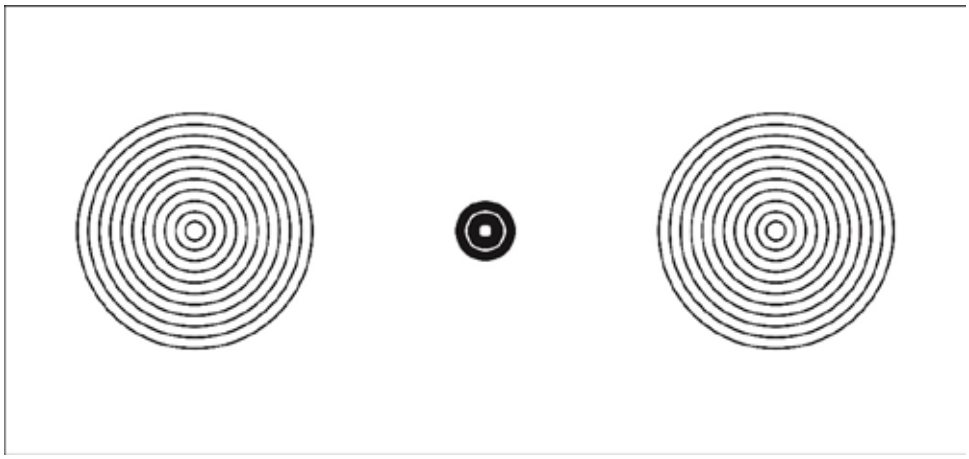

50m Running Target Paper Target

CamScanner

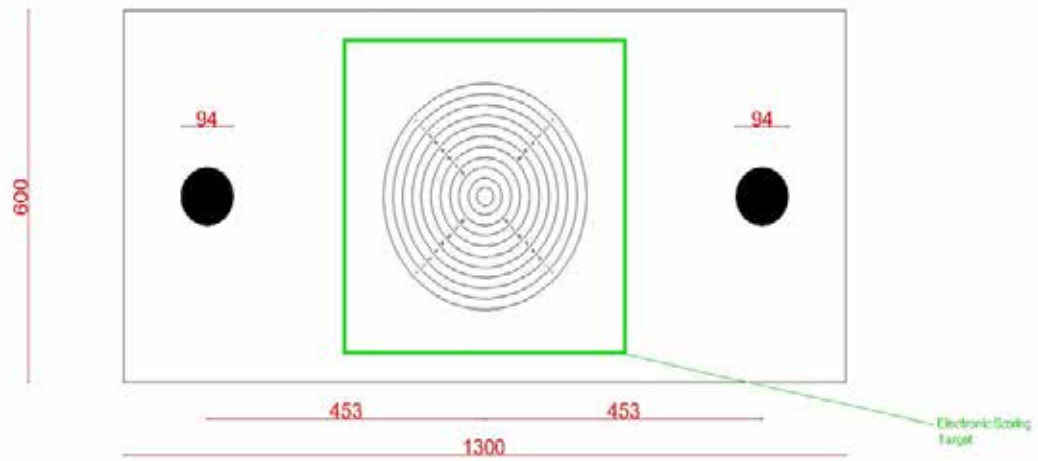

50m Running Target Electronic Target

CamScanner

6.3.4.8 10m Running Target

The 10m Running Target is a single card with two scoring zones each with rings 1 to 10 on the two sides and a single aiming mark in the centre.

10 Ring	5.5mm	(±0.1mm)	5 Ring	30.5mm	(±0.1mm)
9 Ring	10.5mm	(±0.1mm)	4 Ring	35.5mm	(±0.1mm)
8 Ring	15.5mm	(±0.1mm)	3 Ring	40.5mm	(±0.1mm)
7 Ring	20.5mm	(±0.1mm)	2 Ring	45.5mm	(±0.1mm)
6 Ring	25.5mm	(±0.1mm)	1 Ring	50.5mm	(±0.1mm)

Inner ten is white: 0.5mm (±0.1mm), gauged in the same way as rings 3 – 10. Black from 5 to 10 rings = 30.5mm (±0.1mm).

Ring thickness: 0.1mm to 0.2mm.

Recommended size of target card: 260mm x 150mm (minimum 260mm x 140mm).

The centre of the 10 ring must be 70mm (±0.2mm) from the centre of the aiming mark measured on a horizontal line.

Scoring ring values 1 to 9 must be printed clearly in the appropriate scoring zones in diagonal lines at right angles to each other.

The aiming mark is black with an outside diameter of 15.5mm and must include white rings of the size of the 10 (5.5mm) and 9 (10.5mm) rings and a white central dot (0.5mm).

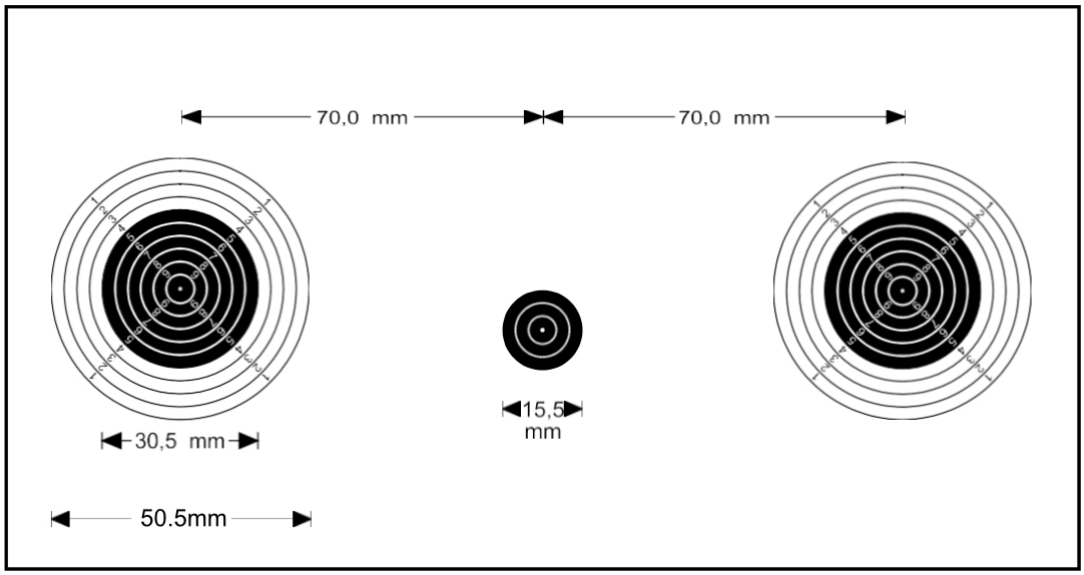

10m Running Target Paper Target

CamScanner

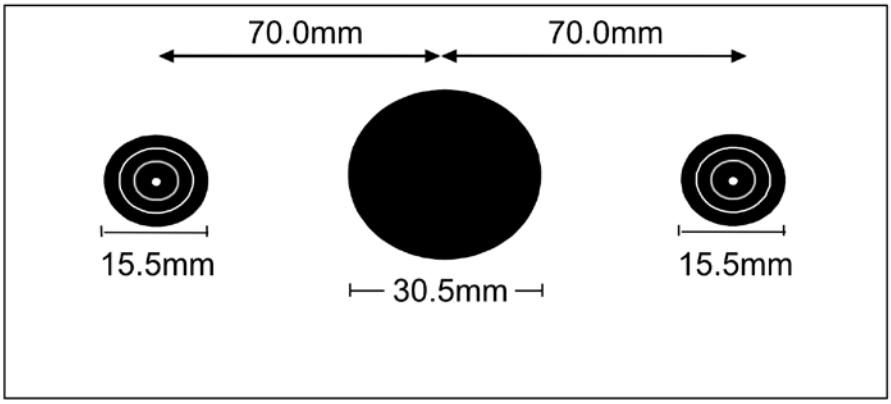

10m Running Target Electronic Target

The 30.5mm diameter is a hole.

6.3.5 Target Control Systems

For Rifle and Pistol events, target marking and control systems must be used to facilitate the conduct of competitions.

6.3.5.1 EST Target Control Systems

Backing Targets, Backing Cards and Control Sheets are used as control systems for ESTs (see diagram).

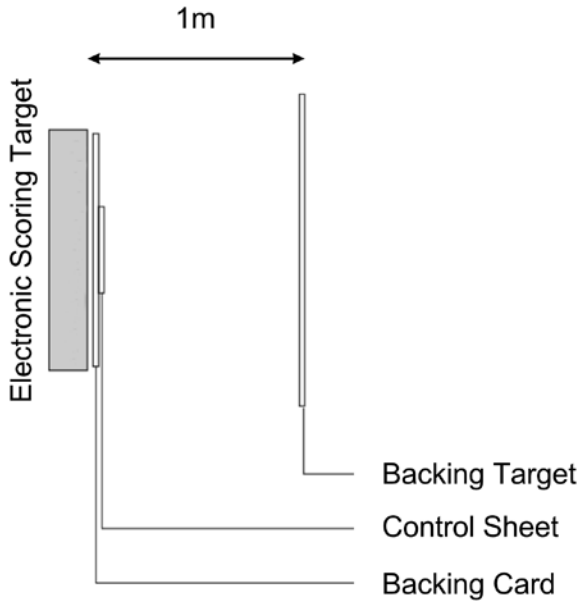

CamScanner

6.3.5.2 **Backing Targets for 50m and 300m ESTs**

To locate cross-shots, backing targets must, if possible, be placed 0.5m – 1.0m behind the targets. The exact distance between the target and the backing target must be measured and recorded and, as far as possible, be the same for all targets.

6.3.5.3 **Backing Targets for 25m ESTs**

a) Backing targets must be used for all 25m Pistol events to assist in the identification of shots that may have missed the targets;

b) Backing targets must, at a minimum, cover the entire width and height of the 25m frames (5 targets). They should be located a uniform distance of one (1) meter behind the competition targets. They must be continuous, or on adjoining frames, without any spaces between them, to register any shots between competition targets;

c) Backing targets for 25m ESTs must be made of non-reflecting paper of a neutral colour similar to the colour of the target; and

d) For 25m events, new backing targets must be provided for each athlete for each stage.

6.3.5.4 **Control Sheets for 25m ESTs**

The area immediately behind the ESTs must be covered by control sheets. New control sheets must be provided for each athlete for each stage.

If the location of any shot hole is outside of the control sheet, the geometric relation between the shot holes on the control sheet and the backing card must be noted before the control sheet is removed.

6.3.5.5 **Backing Cards and Control Sheets for 50m and 300m ESTs**

A backing card must be affixed to the rear of all 50m and 300m ESTs. Smaller, replaceable control sheets should be affixed to the backing cards. The control sheets or backing cards must be renewed and collected after each relay. If the location of any shot hole is outside of the control sheet, the geometric relation between the shot holes on the control sheet and the backing card must be noted before the control sheet is removed.

CamScanner

6.3.6 Clay Targets for Shotgun Events

Diameter:	110mm (±1mm).
Height:	25mm to 26mm.
Weight:	105g (±5g).

The colour of the targets may be all black, all white, all yellow, or all orange; The target colour must be clearly visible against the range background under all normal light conditions. The same colour targets must be used for training.'

The clay target colour must be specified in the programme of each ISSF Championship with Shotgun events.

Clay targets used in all ISSF supervised Championships and Competitions must be approved by the ISSF and will be eco-friendly targets that comply with appropriate international standards (contact ISSF Headquarters for details).

6.3.6.1 General Specifications for Clay Targets

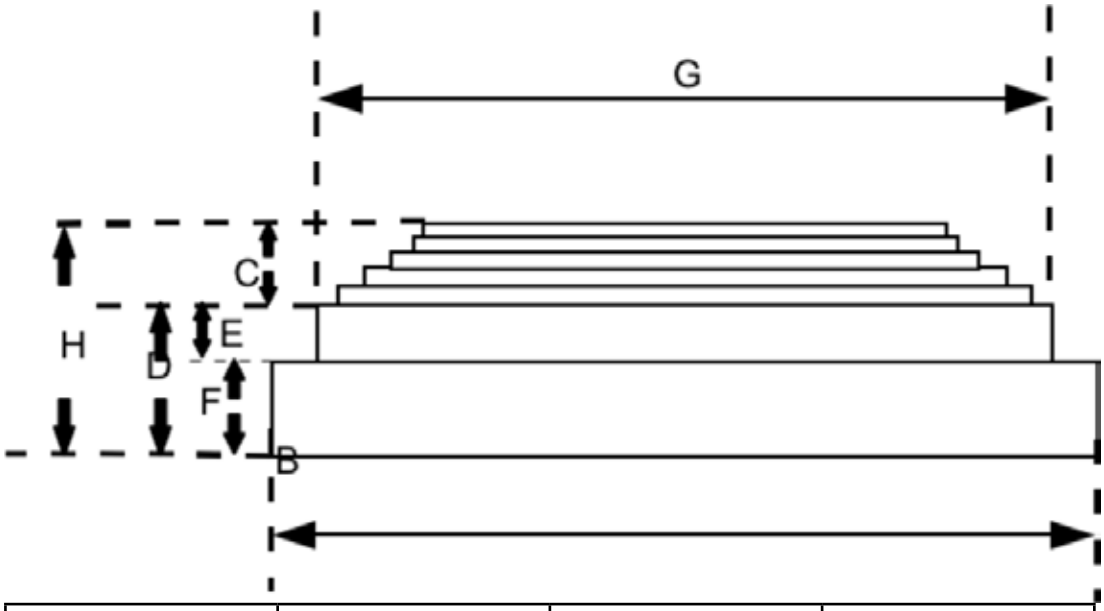

A-Weight	105g ± 5g	E-Rotating Ring Height	7mm ± 1mm
B-Base Ø	110mm ± 1mm	F-Base Height	11mm ± 1mm
C-Dome Height*	8mm ± 1mm	G-Rotating Ring	95mm – 98mm
D-Base and Ring Height	18mm ± 1mm	H-Total Height	25mm to 26mm

"G" - The actual shape of the target dome is to be engineered to provide the best aerodynamic design and flight stability.

"Breakability" – Targets must be capable of withstanding the force of the trap to be thrown to a distance of 80-90m and to be easily breakable when hit with normal ISSF Skeet and Trap cartridges within normal shooting distances. An ISSF approved clay target testing device must be used to test the breakability of clay targets. Standards for the use of such devices have been established by the ISSF Shotgun and Technical Committees.

CamScanner

6.3.6.2 **“Flash” Targets**

a) In Shotgun Finals, “Flash” targets containing coloured, non-toxic powder that contrasts with the range background must be used.

b) In Shotgun Qualification Rounds and Shoot-offs before Finals, “Flash” targets containing ISSF approved non-toxic, coloured powder may be used.

c) If a target of the same external colour as those used in the competition, but containing the incorrect coloured powder, is inadvertently thrown, the results of any shot at that target must be recorded.

d) In all cases where “Flash” targets are used, the “Flash” targets must comply with Rule 6.3.6.1.

6.4 RANGES AND OTHER FACILITIES

6.4.1 General Requirements

6.4.1.1 Requirements for minimum range sizes for ISSF Championships are given in Rule 3.6.1. While those requirements are the minimum, the practical requirement for Shotgun World Championships and large World Cups is that five (5) ranges are recommended. For large Rifle/Pistol World Cups, 80 10m and 80 50m firing points are recommended.

6.4.1.2 A separate Rifle/Pistol Finals Range is required for World Championships and the Olympic Games. The ISSF recommends that a separate Finals Range be available for World Cups.

6.4.1.3 Continental Confederations must establish minimum range requirements for Continental Championships.

6.4.1.4 Trap and Skeet ranges may be combined. Trap ranges must be convertible to Double Trap unless separate Double Trap ranges are provided. If possible, Trap and Skeet Finals should be conducted on the same Range.

6.4.1.5 The area used by athletes, officials and spectators on Rifle and Pistol ranges must be covered to provide protection from sun, wind and rain. This protection must not give a significant advantage to any firing point or part of the range.

6.4.1.6 The ISSF recommends that all new ranges be accessible to disabled persons. Existing ranges should be adapted to make them accessible to disabled persons.

6.4.1.7 It is recommended that ranges used for World Championships and Olympic Games be completed at least one (1) year in advance.

6.4.1.8 Electronic target systems (EST) of makes and models approved by the ISSF must be used for Rifle and Pistol Eliminations, Qualifications and Finals in the Olympic Games, ISSF World Championships and in ISSF World Cups. Electronic target systems must include monitors or video boards that display individual shots and scores for spectators as well as displays that show ranked incomplete results during the competitions.

6.4.1.9 Technical Delegates are responsible for examining the ranges and other facilities to ensure that they comply with ISSF Rules and are prepared for the conduct of the Championship. Technical Delegates should use the Checklist for Technical Delegates to examine the organization, ranges and facilities (available from ISSF Headquarters).

CamScanner

6.4.1.10 A Technical Delegate may approve small deviations from specifications in ISSF Rules that do not conflict with the intent and spirit of ISSF Rules, except that no deviations in shooting distances or target specifications are allowed.

6.4.2 **General and Administrative Facilities**

The following facilities must be provided on or near the shooting ranges:

a) Athlete rest areas;

b) Changing rooms for athletes near the Finals and Qualification Ranges;

c) Meeting rooms for use by ISSF officials and Juries;

d) Rooms for Organizing Committee offices and administration;

e) A room with adequate storage for RTS (results, timing and scoring) operations;

f) Control rooms on each range for RTS (results, timing and scoring) and results provider operations;

g) Dry firing or warm-up areas for all rifle, pistol and shotgun ranges;

h) All 10m Ranges must have a supply of compressed air that is accessible to athletes and coaches; compressed air tanks must be securely fastened to a wall or other structure so they cannot be tipped over;

i) One Main Scoreboard for posting official results and notices, and smaller Range Scoreboards on each range for posting competition schedules and preliminary results; a scoreboard should also be placed in the athletes rest area;

j) An armoury for secure arms storage;

k) An equipment control testing area, with changing rooms;

l) A gunsmith's shop with suitable work benches and vices;

m) Free facilities for firearms and equipment manufacturers to service their products;

n) An area for commercial displays should be available; a fee may be charged for such displays;

o) A restaurant or facilities for food service and refreshments;

p) Adequate toilet facilities;

q) Wireless Internet and email communication services; separate internet services must be provided for operations (results services, ISSF TV, administration) and for the public;

r) A Victory Ceremony area or a portable Victory Ceremony podium and backdrop that can be set up on the Finals Range;

s) Facilities for media, radio and television representatives;

t) Facilities for Anti-Doping testing, with toilets;

u) Appropriate medical facilities; and

v) Parking facilities.

CamScanner

6.4.3 **General Standards for 10m, 25m, 50m and 300m Rifle and Pistol Ranges**

6.4.3.1 New 25m, 50m and 300m outdoor ranges should be constructed in such a way that the sun is behind the athlete as much as possible during the competition day. The range design must ensure that there are no shadows on the targets.

6.4.3.2 Ranges must have a line of targets and a firing line. The firing line must be parallel to the line of targets.

6.4.3.3 The design and construction of the range may provide the following features:

a) The range may, if necessary, be surrounded by safety walls;

b) Protection against the exit of accidental or unaimed shots from the range may be provided by transverse baffle systems between the firing line and the line of targets;

c) 10m ranges must be indoor ranges.

d) 25m and 50m ranges should, whenever possible, be outdoor ranges, but may, exceptionally, be indoor or closed ranges if required by legal or climatic conditions; or Finals Hall.

e) 300m ranges should have at least 285m open to the sky;

f) 50m ranges should have at least 35m open to the sky;

g) 25m ranges should have at least 12.5m open to the sky; and

h) 25m and 50m Finals ranges may be indoor or outdoor ranges.

6.4.3.4 There must be sufficient space behind the firing points for the range officials and the Jury to perform their duties. There must also be a space provided for spectators. This area must be separated from the area for athletes and officials by a suitable barrier located at least 7.0m behind the firing line.

6.4.3.5 Each range must be equipped with a large clock (a countdown clock is recommended) at each end of the range where the time can clearly be seen by athletes and officials. The Finals Range preparation area must also have a clock. Range clocks must be synchronized with results computers so that all timing devices show the same time. Rifle and Pistol Finals Ranges must have a count- down timer that shows the time remaining for each shot. Shotgun Ranges must have a count-down timer to use in controlling preparation times.

6.4.3.6 Target frames or mechanisms must be marked with numbers (starting from the left) corresponding to their firing point number. The numbers must be large enough to easily be seen by persons with normal vision under normal conditions. The numbers should be of alternating and contrasting colours.

On 25m targets, each group of five (5) targets must be lettered, starting with the A group on the left. 25m targets must also be individually numbered using numbers 11-20 for the targets in groups A and B, numbers 21-30 for groups C and D, etc.

CamScanner

6.4.4 **Wind Flags for 50m Ranges and 300m Rifle Ranges**

6.4.4.1 Rectangular wind flags, which indicate air movements on the range, should be made of a cotton or polyester material weighing approximately 150 g/m². Wind flag height must correspond with the central area of the bullets' flight paths without interfering with the bullet flight paths or athletes' views of the targets. The colour of the wind flags must contrast with the background. Dual colour or striped wind flags are permitted and recommended.

6.4.4.2 **Wind Flag Dimensions and Locations**

Ranges	Distances	Size of Flag
50m Ranges	10m and 30m	50mm x 400mm
300m Ranges	50m	50mm x 400mm
	100m and 200m	200mm x 750mm

6.4.4.3 On 50m ranges, wind flags are to be placed at fixed distances from the firing line, on imaginary lines separating each firing point and its corresponding target from the adjacent points and targets. Flags must be placed on the athlete's side of any safety baffle supports.

6.4.4.4 If a 50m range is also used as a 10m enclosed range the 10m wind flags must be placed far enough down range so that they give an accurate indication of the wind.

6.4.4.5 On 300m ranges, wind flags are to be placed at the above distances from the firing line on imaginary lines separating every fourth (4th) firing point and its corresponding target from the next point and target. Flags must be placed on the athlete's side of any safety baffle supports.

6.4.4.6 Athletes must check the wind flags before the Preparation and Sighting Time starts to be sure they do not obscure their targets. Only Range Officers or Jury Members may reposition wind flags.

6.4.4.7 Private wind indicators and the repositioning of wind flags by athletes are prohibited.

CamScanner

6.4.5 **Shooting Distances**

6.4.5.1 Shooting distances must be measured from the firing line to the target face.

6.4.5.2 Shooting distances must be as exact as possible, subject to the following allowable variations.

10m Range	±0.05m
25m Range	±0.10m
50m Range	±0.20m
300m Range	±1.00m
10m Running Target Range	±0.05m
50m Running Target Range	±0.20m

6.4.5.3 In combined 50m Rifle, Pistol and Running Target ranges, the allowable variation can be increased to +2.50m for Running Target. The opening must be accordingly adjusted.

6.4.5.4 The firing line must be clearly marked. The range distance must be measured from the target line to the edge of the firing line nearest to the athlete. The athlete's foot or, in the prone position the athlete's elbow may not be placed on or in front of the firing line.

6.4.6 **Target Centre Locations**

Target centre locations must be measured to the centre of the ten (10) ring.

6.4.6.1 **Height of Target Centres**

Target centres must be within the following heights when measured from the level of the firing point floor:

Range	Standard Height	Variation Allowable
300m	3.00m	±4.00m
50m	0.75m	±0.50m
25m	1.40m	+0.10m/-0.20m
10m	1.40m	±0.05m
50m Running Target	1.40m	±0.20m
10m Running Target	1.40m	±0.05m

All target centres within a group of targets or range must have the same height (±1cm).

CamScanner

6.4.6.2 **Horizontal Variations for Target Centres on 300m, 50m and 10m Rifle and Pistol Ranges**

Target centres at 300m, 50m, and 10m must be oriented on the centre of the corresponding firing point. Horizontal deviations from a centre line drawn perpendicular (90 degrees) to the centre of the firing point are:

Range	Maximum variation from centre in either direction
300m	6.00m
50m	0.75m
10m	0.25m

6.4.6.3 **Horizontal Variations for Firing Points on 50m and 10m Running Target and 25m Pistol Ranges**

The centre of the firing points must be located as follows:

a) For Rapid Fire ranges, according to the centre of the group of five (5);

b) For Running Target ranges, according to the centre of the opening; and

c) The centre of the firing point must be oriented on the centre of the corresponding target or opening. Maximum horizontal deviations from a centreline drawn perpendicular (90 degrees) to the centre of the target or opening are:

Range	Maximum variation in either direction
25m	0.75m
50m Running Target	2.00m
10m Running Target	0.40m

6.4.7 **General Firing Point Standards for Rifle and Pistol Ranges**

The firing point must be stable, rigid and constructed so that it does not vibrate or move. From the firing line to approximately 1.20m rearward, the firing point must be level in all directions. The remainder of the firing point must either be level or may slope to the rear with a few centimetres drop.

6.4.7.1 If shooting is done from tables, the tables must be approximately 2.20m long and 0.8m to 1.00m wide, rigid, stable and removable. **Shooting tables** may slope to the rear a maximum of 10cm.

CamScanner

6.4.7.2 **Firing Point Equipment.** Firing points must be equipped with:

a) A bench or stand, 0.70m – 1.00m high; rifle athletes may not place any item or material on the table to change its height;

b) A mat for shooting in the prone and kneeling positions. Athletes must not alter shooting mats provided by the range. The front portion of the mat must be of a compressible material not more than 50mm thick, and approximately 50cm x 80cm in size and measuring not less than 10mm when compressed with the measuring device used to measure the thickness of Rifle clothing. The remainder of the mat must have a maximum thickness of 50mm and a minimum thickness of 2mm. The minimum overall size must be 80cm x 200cm. An alternative of two mats is permitted, one thick and one thin, but together they must not exceed the dimensions indicated. The use of private mats is prohibited;

c) A chair or stool for the athlete on Qualification ranges; no chairs or stools for athletes may be placed on or near the firing points on Finals ranges;

d) On new ranges, wind screens forward of the firing line are not recommended, but when necessary to ensure that wind conditions are as equal as possible throughout the range, wind screens may be used; and

e) When it is necessary to install dividing screens on the 300m firing line, they should be made of transparent material on a light frame. Screens should extend at least 50cm forward of the firing line, and be approximately 2.00m high.

6.4.8 **Firing Point Standards for 300m Ranges**

The size of the firing point must not be less than 1.60m wide x 2.50m long. The width of the firing point may be reduced only if any dividing screens are constructed so that an athlete in the prone position can place his left leg in an adjacent firing point without disturbing that athlete.

6.4.9 **Firing Point Standards for 50m Ranges**

a) The firing point must be a minimum of 1.25m wide x 2.50m in length and

b) If the firing point is also used for 300m shooting, the firing point must be a minimum of 1.60m wide.

6.4.10 **Range and Firing Point Standards for 10m Ranges**

a) The firing point must be a minimum of 1.00m wide;

b) The nearest edge of the bench or stand must be placed 10cm forward of the 10m firing line; and

c) If the firing point is also used for 50m shooting, the firing point must be a minimum of 1.25m wide.

6.4.11 **Range and Firing Point Standards for 25m Pistol Ranges**

6.4.11.1 Roofs and screens of 25m ranges must provide the athlete with adequate shelter from wind, rain, sun and ejected cartridge cases.

6.4.11.2 The firing point must be roofed or covered at a minimum height of 2.20m above the level of the firing point.

6.4.11.3 25m ranges must be divided into sections that are composed of two (2) groups of five (5) targets. Two (2) of five (5) targets are one bay.

CamScanner

6.4.11.4 In 25m events, athletes must be squadded with one athlete in each group of five (5) targets for the Rapid Fire Pistol event, and with four (4) (targets 1-2-4-5), three (3) (targets 1-3-5) or exceptionally five (5) (all targets) athletes in a group of five (5) targets for the 25m Pistol, 25m Centre Fire Pistol and 25m Standard Pistol events.

6.4.11.5 25m ranges may be either open or divided by protected walkways. In open ranges, target officers move from the firing line area to the targets. Protected walkways, if used, must allow range staff to safely move to and from the target line. When protected walkways are used, a secure safety control system must be available.

6.4.11.6 Range Sections should be capable of being operated centrally and of being operated independently.

6.4.11.7 Firing point or shooting station dimensions must be:

Event	Width	Depth
25m Rapid Fire Pistol	1.50m	1.50m
25m Pistol 25m Centre Fire Pistol 25m Standard Pistol	1.00m	1.50m

6.4.11.8 Firing points must be separated by small transparent screens that protect athletes from ejected cartridge cases and permit visibility of athletes by officials. The screens must be placed or hung next to the pistol locations and be large enough to prevent ejected cartridge cases from hitting other athletes. The screens must not obscure the officials' and spectators' views of the athletes.

6.4.11.9 45-degree reference lines should be placed on range walls or section dividers to the left or right of the firing points.

6.4.11.10 Each firing point must be provided with the following equipment:

a) A removable or adjustable bench or table, approximately 0.50m x 0.60m in size and 0.70m to 1.00m high;

b) In Qualification competitions, athletes may place items or support stands on a table to increase the table to a maximum height of 1.00m;

c) In Finals competitions, pistol athletes may place an adjustable support stand (8.6.3) on the table provided the total table height with stand does not exceed

1.0m; and

d) A chair or stool for the athlete on Qualification ranges; no chairs or stools for athletes may be placed on or near the firing points on Finals ranges;

6.4.11.11 **Function Firing Range.** A specially designated and supervised function firing range, without targets, must be provided for athletes to test guns.

CamScanner

6.4.12 **Exposure Times for 25m Pistol Events are:**

a) 25m Rapid Fire Pistol: 8, 6 and 4 seconds;

b) 25m Standard Pistol: 150, 20 and 10 seconds; and

c) 25m Pistol and 25m Centre Fire Pistol Rapid Fire Stage: Facing for three (3) seconds for each shot, alternating with an edge-on face away time of seven (7) seconds (±0.1 second).

6.4.13 **Standards for 25m Electronic Scoring Target Systems**

When electronic scoring targets are used, the timing equipment must be set to add a total of 0.3 seconds to each established scoring time. This includes the established firing time +0.1 second (tolerance) plus an after-time of +0.2 second. The after-time ensures that shots that would have been valid skid-shots on paper turning targets, are scored according to the same standard on electronic targets. The green lights remain on for the required time +0.1 sec. and the electronic target must continue to record and score valid shots for an additional 0.2sec. after-time.

6.4.14 **Indoor Range Light Requirements (Lux)**

Type of Indoor Range	General Lighting Recommended Minimum	Target Lighting	
		Minimum	Recommended
10m	500	1500	>1800
10m RT	500	1000	>1000
25m	500	1500	>2500
50m	500	1500	>3000

Finals Ranges must have a minimum general lighting of 500 lux and minimum of 1000 lux on the firing line. For new ranges lighting of about 1500 lux on the firing line is recommended.

6.4.14.1 All indoor ranges must have artificial illumination providing the necessary amount of light without glare or distracting shadows on the targets or firing points. The background area behind the targets must be a non-reflecting, light even neutral colour.

6.4.14.2 Measuring target illumination on targets with external lighting must be done with the measuring device held at the level of the target and pointed toward the firing point (A). Measuring target illumination on targets with internal lighting must be done by measuring reflected light from the target face.

6.4.14.3 Light measurements can also be done in Lumen, especially LED lighting.

CamScanner

6.4.14.4 Measuring general range illumination must be done with the measuring device held at the firing point (B1) and midway between the firing point and the target line (B2) with the device directed toward the ceiling illumination.

Indoor Range Light Measuring

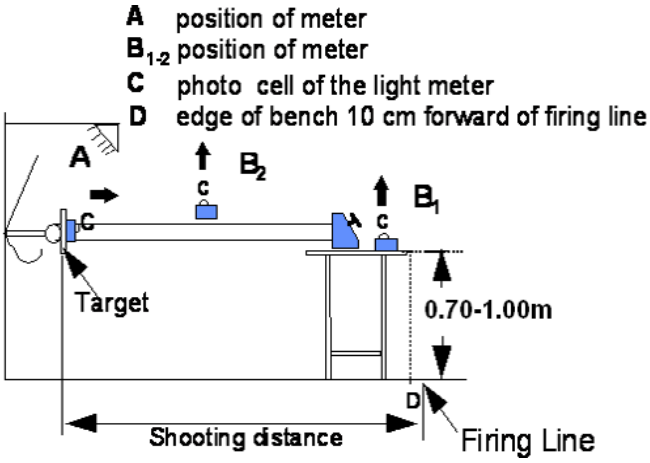

6.4.15 **Standards for Running Target Ranges**

6.4.15.1 The range must be so arranged that the target runs horizontally in both directions across an open area with a constant speed. This area, where the target may be fired upon, is called the “opening.” The movement of the target across the opening is called a “run.”

6.4.15.2 The protective walls on both sides of the opening must be of such a height that no part of the target is visible until it reaches the opening. The edges must be marked with a colour differing from that of the target.

6.4.15.3 Targets for 50m are placed on a trolley or target carrier. The trolley may run on rails, cable, or a similar system and must be moved by a driving unit which can be regulated accurately for speed. Targets for 10m are not changed for left and right runs.

6.4.15.4 The shooting station must be arranged so that the athlete is visible to spectators. The shooting station must be protected from rain. The athlete should also be protected from sun and wind if this does not prevent spectators from seeing him.

6.4.15.5 The shooting station must be at least 1.00m wide and aligned with a centre - line perpendicular to the target. The dry firing position must be located to the left of the shooting station. The shooting station must be screened on both sides with separating partitions so the athlete is not disturbed by dry firing or other extraneous influences. The separating partition between the firing point and the dry firing point must not be longer than to allow the dry firing athlete to watch the READY position of the competition athlete by observing the muzzle movement of his rifle.

6.4.15.6 In front of the athlete there must be a bench or a table 0.70m – 1.00m high.

6.4.15.7 Behind the athlete there must be a place for the Range Officer and at least one member of the Jury. The Register Keepers must be located either behind or at the side of the shooting station.

6.4.15.8 Run times for the targets are:

Slow runs:	5.0 seconds, +0.2 seconds – 0.0 seconds
Fast runs:	2.5 seconds, +0.1 seconds – 0.0 seconds

Timing should preferably be done by using an electronic timer that is started and stopped by switches mounted on the rail. If this method cannot be used, timing may be done by using three (3) stop watches operated by three different persons. The middle (median) of the three (3) times must be counted. If the run time is found to be less or more than that specified, range personnel or the Jury must regulate the time to within the specified run time standards. If the timer is built into the starting control, the timing must be examined by the Jury and sealed.

6.4.15.9 Timing must be electronically controlled and continually displayed for inspection by athletes and officials. Any deviation must be corrected immediately.

CamScanner

6.4.16 Running Target Ranges

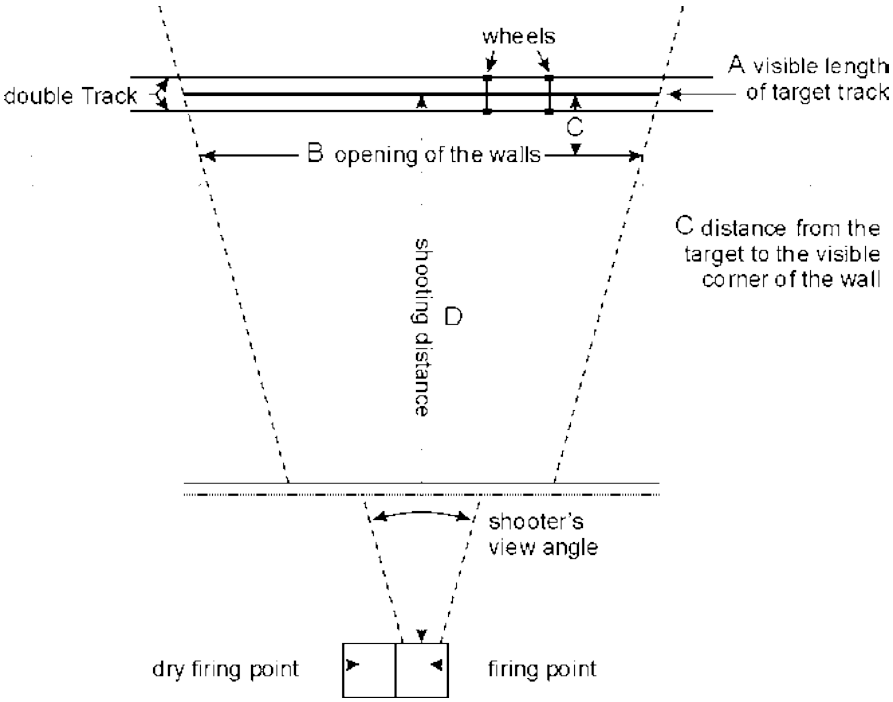

A	Visible length of target track
B	Opening of the wall between visible corners
C	Distance from the target to the visible corner of the wall
D	Shooting distance
Formula for determining the opening:	B = A x (D – C) / D
Example (50m): C= 0.20m	B = 10.00m x (50.00m – 0.20m) / 50.00m B = 10.00m x 49.80 / 50.00 = 10.00m x 0.996 B = 9.96m
Example (10m): C= 0.15m	B = 2.00m x (10.00m – 0.15m) / 10.00m B = 2.00m x 9.85 / 10.00 = 2.00m x 0.985 B = 1.97m

CamScanner

6.4.16.1 **Special Standards for 50m Running Target Ranges**

a) There must be a vertical wall on both sides of the opening for the protection of operating personnel and scorers;

b) There must be an embankment behind the opening. In front of the opening there must be a low wall to conceal and protect the target carrying mechanism; and

c) The visible length of the target track must be: 10.00m (+0.05m/-0.00m) as seen from the firing point. This must be considered when measuring the opening since the distance between the visible corner of the wall and the target increases the distance over which the target is visible.

d) Wind flags are not permitted for 50m Running Target.

6.4.16.2 **Standards for 10m Running Target Ranges**

a) If target changing and shot evaluation is done behind the target carrier, there must be sufficient protection for operating personnel and scorers. The target changing and evaluation must be supervised by a member of the Jury;

b) Behind the opening there must be a backstop to stop pellets and prevent ricochets. The target carrying mechanism must be protected by a front cover plate;

c) The visible length of the target track must be: 2.00m (+0.01m/-0.00m) as seen from the firing point. This must be considered when measuring the opening since the distance between the visible corner of the wall and the target increases the distance over which the target is visible;

d) Two shooting stations may be installed and used alternately, to save time. In this case, the two firing points must not deviate from the standards; and

e) When electronic scoring targets are used, the timing equipment must be set to give the nominal exposure times plus 0.1 second. This should ensure that the earlier appearance of the EST aiming mark is allowed for.

6.4.17 **General Standards for Shotgun Venues**

6.4.17.1 Shotgun venues in the Northern Hemisphere should be laid out so shooting is toward a north to north-easterly direction. Venues in the Southern Hemisphere should be laid out so shooting is toward a south to south-easterly direction. These arrangements place the sun to the back of the athlete and on the target as much as possible.

6.4.17.2 Where necessary and feasible, new Shotgun venues must be constructed with a reasonably level shot fall zone that is free of obstacles to permit mechanical salvage and the recovery of lead pellets. Net systems may also be installed to capture lead pellets.

6.4.17.3 When Shotgun venues include more than one range, ranges must be identified, starting on the left, with letters (A, B, C, etc.) or numbers (1, 2, 3, etc.),.

CamScanner

6.4.18 Standards for Trap Ranges

6.4.18.1 The Trap Pit

The trap pit must be constructed so that the upper surface of the roof is on the same elevation as the surface of the shooting stations. Interior measurements of the trap pit should be approximately 20m from end to end, 2.00m from front to rear, and 2.00m to 2.10m from the floor to the underside of the roof. These dimensions will allow freedom of movement for working personnel and sufficient storage space for targets (see Figures).

6.4.18.2 Distances Between Trap Pits

The distance between the centre of machine fifteen (15) on Range A and the centre of machine one (1) on Range B must not be less than 35m. For pre-existing ranges with a distance less than 35m, as specified above, the Jury may reduce the throwing angles of the settings of machine 13 of Range A, and machine three (3) of Range B, if necessary, to prevent those targets from crossing over, into the target flight path of the adjoining range and disturbing those athletes.

6.4.18.3 The Traps (Target Throwing Machines)

Each trap pit must have 15 traps attached to the front wall of the pit. The traps must be divided into five (5) groups of three (3). The centre of each group must be indicated only by a painted mark on the top of the roof which must be positioned so that it must indicate the point above the centre trap of each group at which a target must emerge when set to throw at zero (0) degrees. . The painted mark must be in the form of an isosceles triangle (the length, the sides of the triangle must be between 0.40m ± 0.05m). The triangle must be positioned with its base in line with the edge of the roof of the trap pit. The distance between the traps within each group must be equal, from 1.00m to 1.10m. The distance between the centre traps of adjacent groups should be 3.00m to 3.30m. For existing ranges this may be 3.00m to 6.00m.

a) In the case of use of machines with left-hand (clockwise) rotation of throwing arms the distance between the left side (viewed from behind) and the centre machine in each group may be reduced to less than the prescribed 1.00m to 1.10m (see also Rule 6.4.19.3).

b) The traps must be installed in the pit so that the pivot point of the throwing arm is 0.50m (±0.10m) below the top surface of the roof of the trap pit and set back 0.50m (±0.10m) from the front edge of the roof when the trap is set at the 2m elevation. This is defined as the Throwing Point. Traps may be fully automatic (self-loading and cocking), semi-automatic (hand loaded and self-cocking), or manual (hand loaded and cocked). Each trap must be provided with a means of sealing its elevation angle, and main spring tension after these have been inspected and approved by the Jury. All traps must be provided with a means of making target throwing settings on a precise setting. All traps which are hand loaded must have two stops fixed to them. The stops are necessary to prevent accidental or deliberate movement of the target forward or backward on the throwing arm, thus changing the preset directions of the target. Each trap must have the elevation and angle sectors marked in increments of 10 degrees.

CamScanner

c) The traps must be released by an electric-manual or electric-microphone system. The control system must be placed in such a position that the puller can clearly see and hear the call of the athlete. The release devices must guarantee equal distribution of targets to each athlete in a series of 25 targets. This distribution must be: ten (10) targets to the right, ten (10) targets to the left and five (5) targets to the centre. With the correct distribution, in a series of 25 targets, each group of traps must throw two (2) targets from the left trap, two (2) from the right trap and one (1) from the centre trap as the athletes progress from station 1 to 5.

d) The five (5) shooting stations must be arranged on a straight line at a distance of 15m ± 0.05m to the rear of the front edge of the trap pit. Each station must be prominently marked with a square 1.00m x 1.00m which is centred on a line perpendicular to the line of shooting stations and extending through the painted mark which indicates the zero (0) degree exit point above the middle machine in each group of three.

A sixth station must be marked about 2.00m to the rear and slightly to the left of Station 1 where athlete number 6 may take his position. All six (6) shooting stations must have a table or bench where the athletes may place their extra cartridges and other equipment. The stations must be firm and level in all directions. Each station must have at the front right and left hand corners a block of wood, piece of carpet or rubber about 15cm square or round upon which the athlete may rest his shotgun.

e) For Trap Finals, medium intensity coloured lamps must be fitted to each microphone stand at a height of 40cm to 75cm to indicate when the microphone is live. The lamp system must be constructed to indicate a pause (microphone dead) of 5-25 seconds after each athlete has shot at a predetermined number of targets. At the end of the pause, the Referee must command “READY” and the athlete next to shoot must have a further 12 sec. preparation time to call for the target.

f) 3.00m to 4.00m behind the line of shooting stations a path must be provided for mandatory use by the athletes moving from station 5 to station 6. Athletes must not pass between the path and the shooting stations. A wire, rope or other suitable barrier is to be erected 7.00m to 10.00m behind the return walkway. No spectators are to be allowed within this barrier. The Referee and Jury Members are responsible for enforcing this rule. The shooting stations, Referee stand and operator stand should have adequate protection from sun and rain, except that Finals ranges should, if possible, be open.

CamScanner

6.4.18.4 Each station must be prominently marked with a square 1.00m x 1.00m which is centered on a line perpendicular to the line of shooting stations and extending through the painted mark which indicates the zero (0) degree exit point above the middle machine in each group of three.

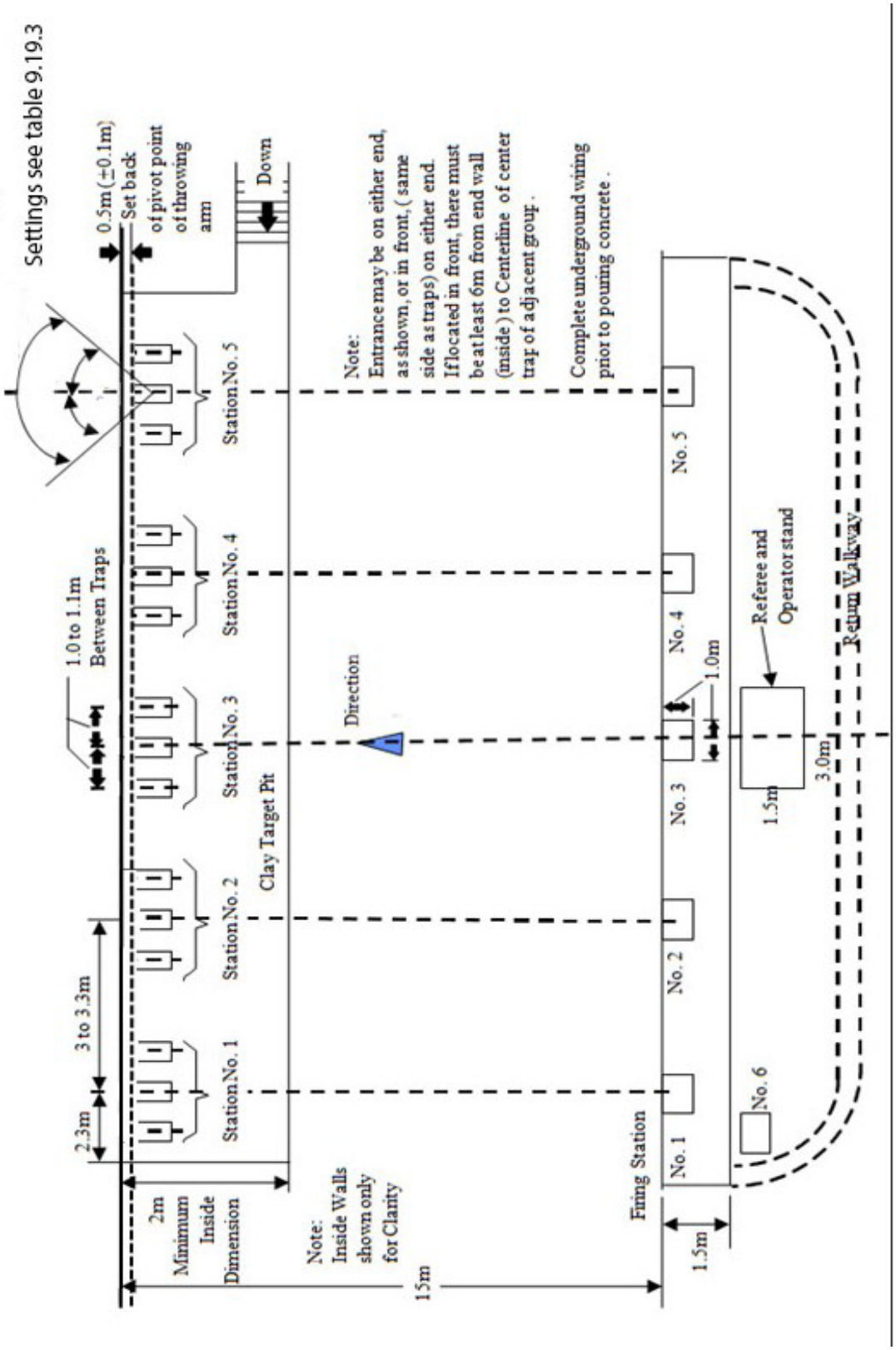

6.4.18.5 Trap and Double Trap pit section

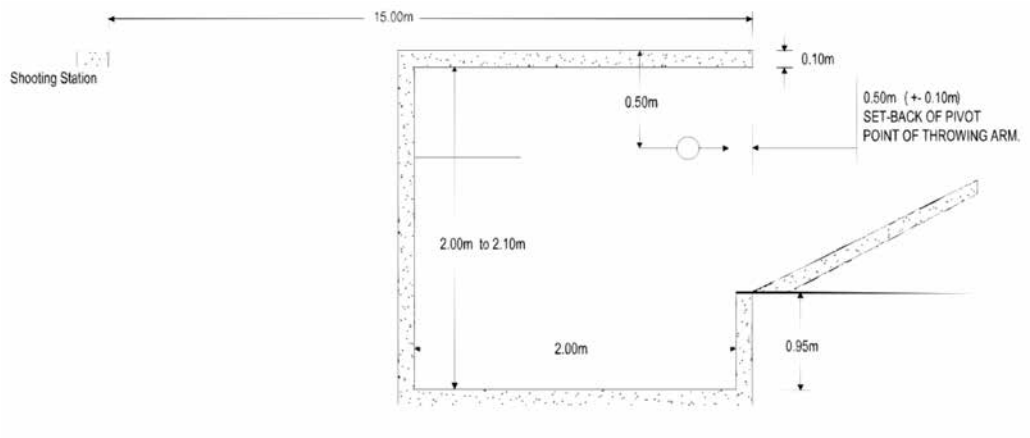

6.4.19 Standards for Double Trap Ranges

6.4.19.1 The Trap Pit

Trap ranges are most commonly adapted to Double Trap competition by using the centre group of traps, numbers 7, 8 and 9, directly in front of Station 3. See Double Trap Rules.

6.4.19.2 Distances between Trap Pits

See Rule 6.4.18.2 when trap pits are used. When separate double trap pits are constructed, the distance from the centre machine on one field to the centre machine on the adjoining field should not be less than 35.00m. (The angles of targets in Double Trap are not so wide as in Trap therefore reductions are possible.)

6.4.19.3 Traps for Double Trap (target throwing machines)

Each double trap pit must have three (3) traps attached to the front wall of the pit. The zero (0) degree exit point of the centre trap of the group must be indicated only by a painted mark on the top side of the pit roof. The distance between traps within the group must be equal, from 1.00m to 1.10m (see Rule 6.4.18.3). Traps number 1 and number 3 should be a minimum of 1.50m from the end walls.

a) The traps must be installed in the pit so that the pivot point of the throwing arm is 0.50m (±0.10m) below the top surface of the roof of the trap house and set back 0.50m (±0.10m) from the front edge of the roof when the trap is set at the 2.00m elevation (see Figures). Traps may be fully automatic (self-loading and cocking), semi-automatic (hand loaded and self cocking), or manual (hand loaded and cocked). Each trap must be provided with a means of sealing its elevation, angle, and main spring tension after these have been inspected and approved by the Jury. All traps must be provided with a means of allowing target throwing on a precise setting. All traps which are hand loaded must have two stops fixed to them. The stops are necessary to prevent accidental or deliberate movement of the target forward or backward on the throwing arm, thus changing the preset directions of the target. Each trap must have the elevation and angle sectors marked in increments of 10 degrees.

CamScanner

b) The traps must be released by an electric-manual or electric-microphone system. If a manual control system is used it must be placed in such a position that the puller can clearly see and hear the call of the athlete. For all ISSF Championships an automatic release device must be used which must be set to simultaneously release the targets immediately after the athletes call. Where an electric-manual system is used, the release device must be designed so that only one (1) button or switch can be used to release the targets.

c) The five (5) shooting stations must be arranged on a straight line at a distance of 15m ± 0.05m to the rear and parallel to the front edge of the trap pit. Each station must be prominently marked with a square 1.00m x 1.00m. Station 3 must be centred on a line extending through the painted mark that indicates the zero

(2) degree exit point above the middle trap in the group. Station 2 is 3.00m – 3.3m

to the left of Station 3 and Station 1 is equidistant to the left of Station 2.

Likewise Station 4 is 3.00m – 3.30m to the right of Station 3 and Station 5 equally 3.00m – 3.30m to the right of Station 4 (see Figure, Separate Double Trap range). A sixth Station must also be marked about 2m to the rear and slightly to the left of station 1 where athlete number 6 may take his position at the start of the competition. All six (6) of the shooting stations must be furnished with a table or bench where the athletes may place their extra cartridges and equipment. The stations must be firm and level in all directions and must be at the same elevation as the front edge of the roof of the trap pit. Each station (six) must also have a block of wood, piece of carpet or thick rubber sheet about 15cm square or round upon which an athlete may rest his gun.

d) 3.00m to 4.00m behind the line of shooting stations a path must be provided for mandatory use by the athletes moving from station 5 to station 6. Athletes must not pass between the path and the shooting stations. A wire, rope or other suitable barrier is to be erected 7.00m to 10.00m behind the return walkway. No spectators are to be allowed within this barrier. The Referee and Jury Members are responsible for enforcing this rule. The shooting stations, Referee stand and operator stand should have adequate protection from sun and rain, except that Finals ranges should, if possible, be open.

CamScanner

6.4.19.4 **Separate Double Trap Range – 3 Machine**

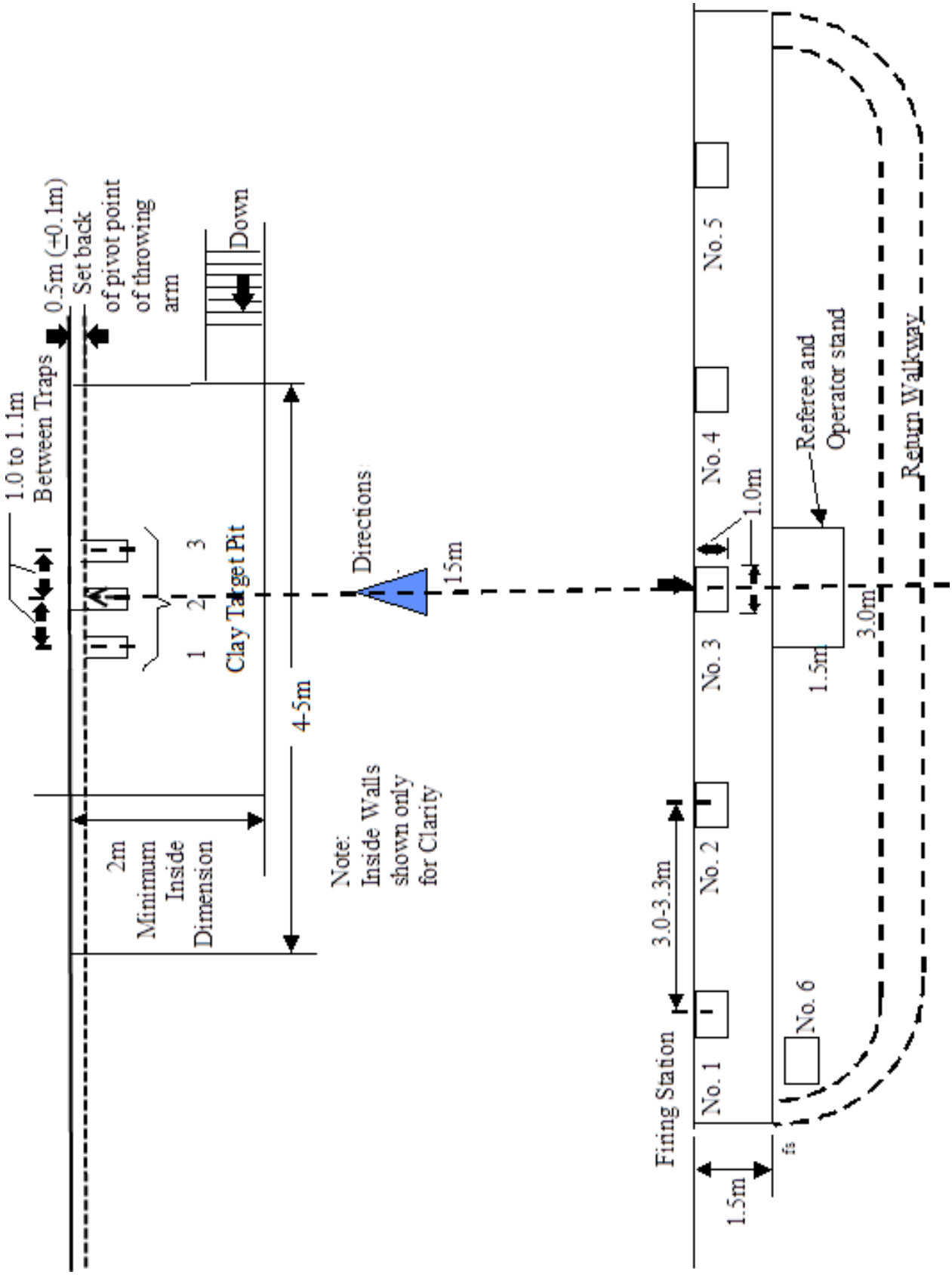

CamScanner

6.4.20 **Standards for Skeet Ranges**

6.4.20.1 A Skeet field consists of two houses (high house and low house) and eight (8) shooting stations. Stations 1 through 7 are arranged on a segment of a circle with a 19.20m radius and a base chord of 36.80m (with a tolerance of ±0.25m) which is 5.50m from the centre point of the circle which is marked by a stake.

a) The centre of the circle which is marked by a stake also marks the base of the target crossing point.

b) Station 1 is located at the left end of the base chord and station 7 at the right end when standing anywhere on the segment of the circle and facing the centre stake. Stations 2 through 6 are located on the segment of the circle at points equidistant from each other (the distance between the centre of the front of the stations 1 and 2, 2 and 3, etc., is 8.13m ±0.05m on chord). Stations 8 and 4 are located at the centre of the base chord (see Figure).

c) Shooting stations 1 through 7 are 0.90m ±0.05m x 0.90m ±0.05m square, with two sides parallel to a radius of the circle drawn through the station marker (centre of the station). Shooting station 8 is rectangular, 0.9m ±0.05m wide by 1.85m ±0.05m long, with its long sides parallel to the base chord. The location of each shooting station must be accurately indicated. The markers for shooting stations 1 through 7 are on the centre of the side nearest the target crossing point. The marker for shooting station 8 is on the centre point of the base chord. All eight (8) shooting stations must be on the same level, within ±0.05m difference in elevation.

CamScanner

6.4.20.2 **Target Distances, Angles and Elevations**

a) Each house must contain a clay target throwing machine in a fixed position. The throwing arm of the target throwing machine in the high house, when in a horizontal position, should be 2.80m ±0.10m above the level of station 1 and the throwing arm in the low house should be 0.80m ±0.10m above the level of station 7.

b) Targets thrown from the high house must emerge at a point 0.90m ± 0.05m behind the station marker 1 (measured along the extended base chord) and 3.05m ±0.05m above the level of the station. Targets thrown from the low house must emerge at a point 0.9m ± 0.05m behind station marker 7 (measured along the extended base chord) (moved 0.75m ± 0.05m to the exterior of the base chord) and 1.05m ± 0.05m above the level of station 7.

c) Targets properly released must pass through a circle 0.90m - 0.95m in diameter, located 4.60m ±0.05m above the centre point.

d) In calm weather conditions targets must carry a distance of 68.00m ±1.00m as measured from the face of the house behind stations 1 and 7. If the correct distance cannot be verified by measurement, the Jury will decide the trajectory of the targets.

e) The shooting boundaries of stations 1 to 7 are 40.30m ±0.10m from the face of each house. For station 8 the shooting boundary is determined by the crossing point between a straight line running from station 4 to station 8 and the target crossing point. Suitable markers must be placed on the target flight path, at points 40.30m ±0.1m from both the high house and the low house, to indicate the shooting boundaries. Similar markers must be placed at 67.00m and 69.00m to indicate the distance a regular target must fly. The tops of these distance markers should indicate the ground level.

f) A safety shield must be installed at the opening of each trap house so that the trap operator is not visible to an athlete on any station. This precaution is mandatory as a safety measure to protect the operator from possible injury from direct or ricocheting shot, and the athletes from broken targets emerging from the opening of the trap house. A wire, rope or other suitable barrier is to be erected 10.00m to 13.00mbehind Station 4 and parallel to the base chord. No spectators are allowed within this barrier. The Referee and Jury Members are responsible for the enforcement of this Rule.

g) The traps must be released by an electric-manual or electric-microphone system (see note below) with a timer device which must be installed so as to allow the operator to see and hear the athletes. For all ISSF Championships the use of a timer is mandatory. This must provide for the release of the targets within an indefinite period of time, varying from instant release up to a maximum of three (3) seconds after the athlete has called for his target. The release device must be designed so that only one (1) button (or switch) can be used to release double targets.

h) Note: If an electro-microphone system is to be used, it must be so constructed as to randomly insert a delay varying from 0.2 to 3.0 seconds.

i) A coloured lamp must be fitted to the outside of both high and low houses. The lamps must light immediately on the athlete's call and extinguish when the target(s) are thrown. The lamps must be clearly visible to the Referee. The lamp must be installed on the side of the skeet house which faces the spectator area at a height of 2.20m – 2.80m on the high house and 1.60m – 2.00m on the low house.

CamScanner

6.4.20.3 **Skeet Range Layout**

All new Skeet ranges must comply with these specifications. Skeet ranges constructed before 2013 with stations 1 and 7 facing the opposite target house will continue to be accepted for ISSF Championships.

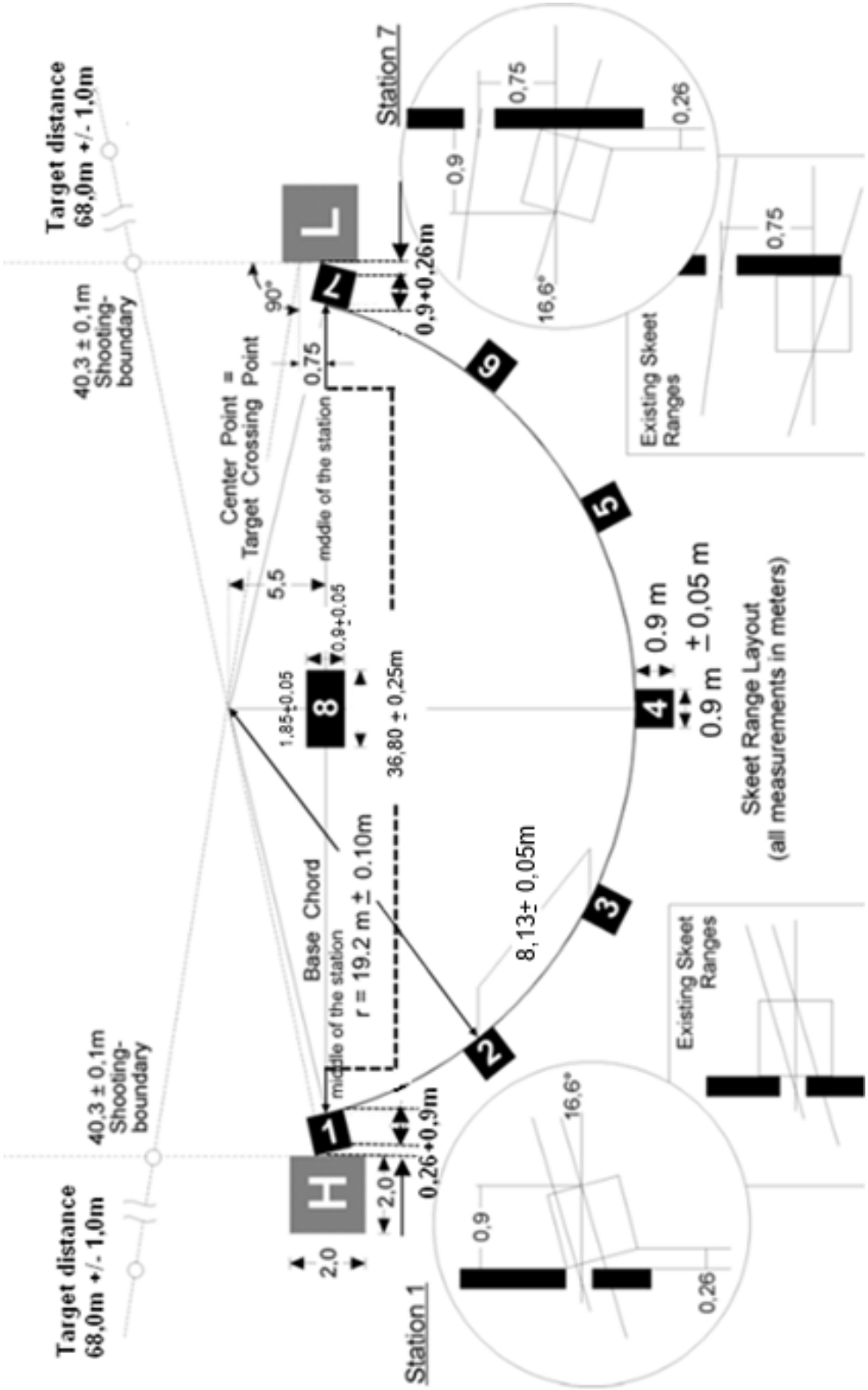

CamScanner

6.4.20.4 **Skeet Range View**

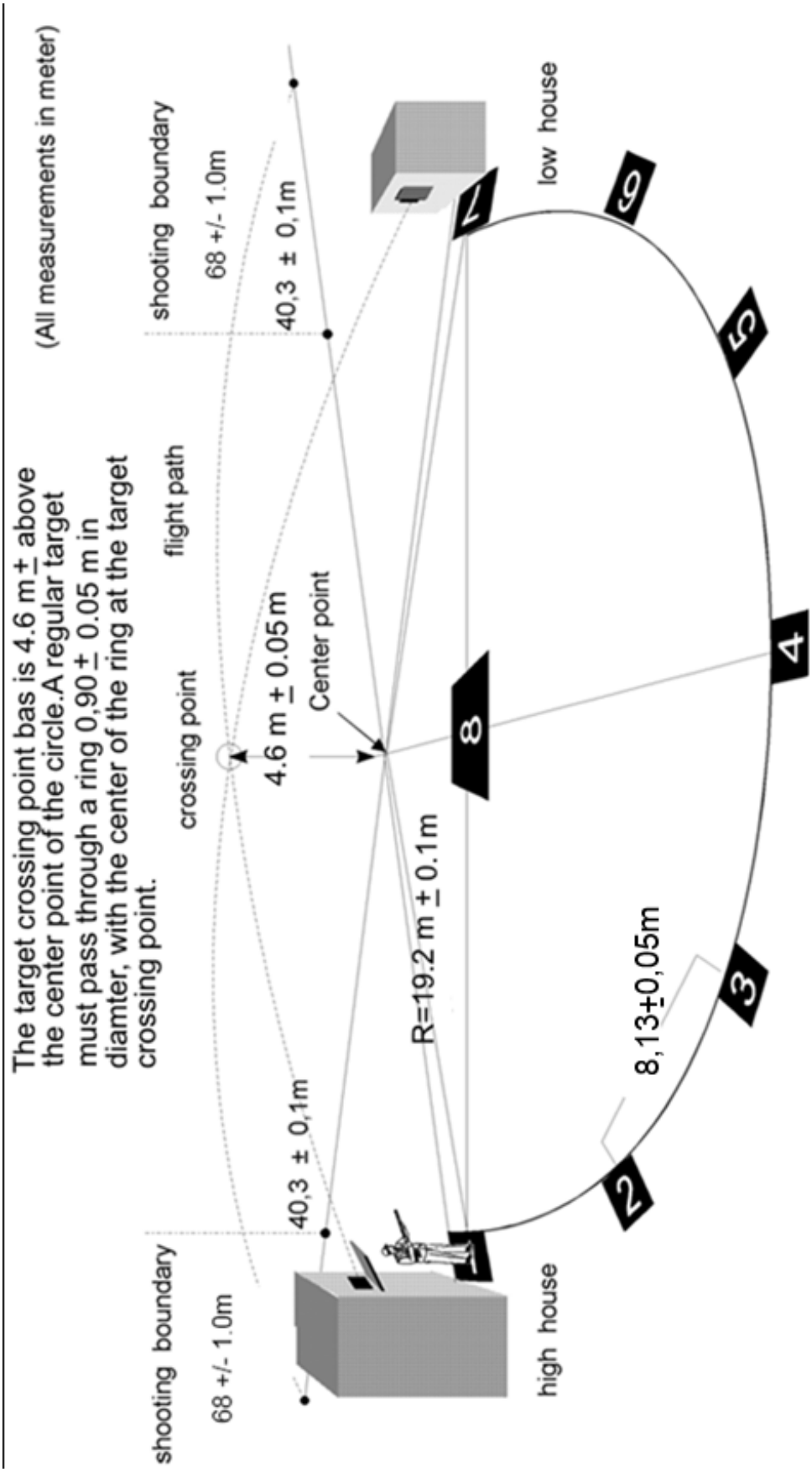

CamScanner

6.5 GAUGES AND INSTRUMENTS

a) Each Organizing Committee must provide a complete set of gauges and instruments for Equipment Control during ISSF Championships;

b) A detailed list of Equipment Control Instruments that are required for conducting Equipment Control tests and the requirements and specifications for those instruments is available from ISSF Headquarters;

c) The ISSF Technical Delegate or the Chairman of the Equipment Control Jury must examine and approve all gauges and instruments prior to the competition;

d) Calibration test equipment for use in examining Equipment Control instruments is available from ISSF Headquarters and must be used to calibrate testing instruments before each day of testing and when a disqualification is considered during post-competition testing (Calibration Report Forms are available from ISSF Headquarters); and

e) The measuring devices used to test the thickness, stiffness and flexibility of athletes' clothing must be constructed according to this rule (see Rule 6.5.1 below) and be approved by the ISSF Technical Committee.

6.5.1 Thickness Measurement Device

The device used to measure the thickness of clothing and shoes must be capable of measuring to one-tenth of a millimetre (0.1mm). Measurements must be taken with a 5.0kg weight applied. The device must have two (2) circular flat surfaces facing each other, each 30mm in diameter.

CamScanner

6.5.2 Stiffness Measurement Device

The device used to measure the clothing stiffness must be capable of measuring to one tenth of a millimetre (0.1mm) and have the following dimensions:

A	Measuring cylinder	=	60mm diameter
B	Measuring weight	=	1000g (including grip and measuring plate C)
C	Measuring plate	=	20mm diameter
D	Digital display		indicating 0.1mm
E	The rounding of the edges on the measuring plate (C) and measuring cylinder (A) must not be more than 0.5 mm radius as a maximum.		

- Stiffness measurements must be made with the fabric/material laid flat, without stretching, on measuring cylinder “A;” and
- Measuring weight “B” presses measuring plate “C” onto the fabric/material on measuring cylinder “A.”

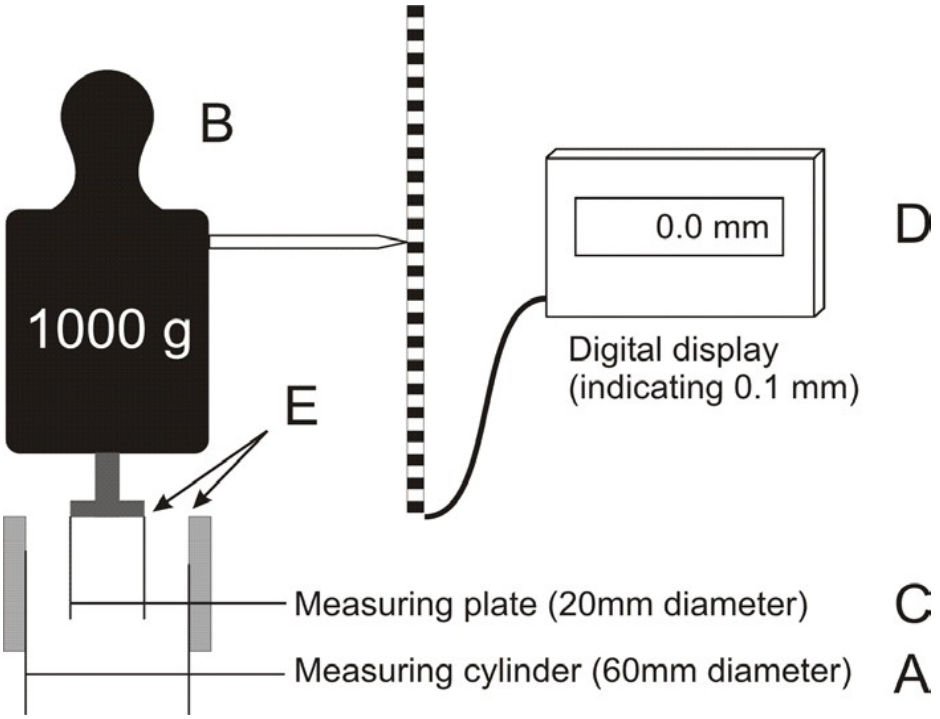

CamScanner

6.5.3 **Shoe Sole Flexibility Measurement Device**

The device used to measure shoe sole flexibility must be capable of accurately measuring, in degrees, the shoe sole flexibility under a precise amount of upward pressure (NM).

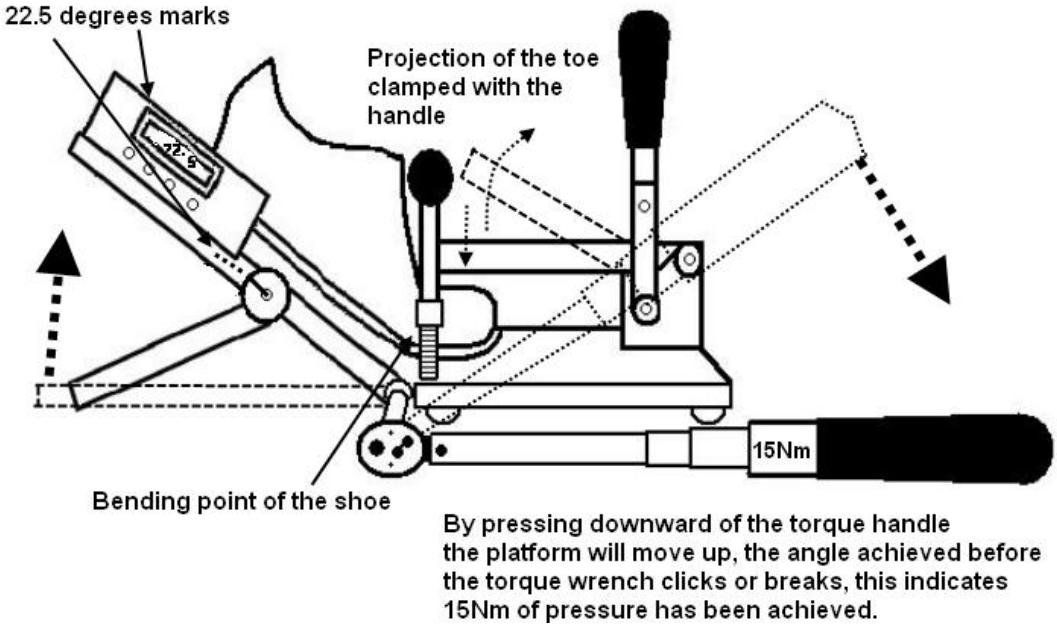

6.6 CHAMPIONSHIP ADMINISTRATION

6.6.1 Championship Programme and Schedule

The administration of ISSF Championships shall be carried out in accordance with this Rule, except that the administration of Olympic and Continental Games Shooting Championships shall be carried out in accordance with the charter and regulations of the IOC or the appropriate Continental NOC organization.

6.6.1.1 **Official Championship Programme**. The office of the ISSF Secretary General will provide a standardized Championship Programme and coordinate the preparation of an **Official Championship Programme** with each Organizing Committee to be finalized at the time of the annual ISSF Workshop for Organizers in November of the year before the Championship. The **Official Championship Programme**, including invitations, schedules, the official symbol or logo and entry forms will be posted on the ISSF website and the Organizing Committee must publish the **Official Programme** and send it to all ISSF Member Federations as soon as possible after it is finalized.

6.6.1.2 **Official Schedule.** The office of the ISSF Secretary General, the Organizing Committee and the Technical Delegate appointed for the Championship must prepare a detailed **Official Schedule** for each Championship. Championship schedules should include an official arrival day, at least one day of Official Training, or Pre-Event Training (PET) the necessary competition days and an official departure day. World Championship schedules, including Official Training days and the opening and closing ceremonies, should not exceed 20 days. Ranges may be open for additional Unofficial Training before the Official Training Day (PET) at the option of the Organizing Committee. **Official**

CamScanner

Schedules must provide dates and times for Official Training, Pre-Event Training, Elimination Relays, Qualification Relays, Finals Reporting Times, Finals and Victory Ceremonies. Schedule changes, as approved by the Technical Delegate, must be made as soon as possible after the Final Entry Deadline and distributed to all participating delegations.

6.6.1.3 **Entry Status and Limits.** National Federations may enter a maximum of three (3) athletes per nation per event who are competing for awards (in-competition) in ISSF Championship events. In addition, in World Cups, the Organizing Committee may accept a maximum of two additional athlete entries per nation, per event, that may compete for Ranking Points Only (RPO), Olympic MQS status (MQS only) or participate out-of-competition (OOC).

6.6.1.4 **Maximum Entry.** The Organizing Committee and Technical Delegate must establish the **Maximum Entry** (range capacity) for each event on the programme. Final entries that exceed the maximum entry for an event will be placed on a waiting list and will only be accepted if entry spaces become available before the Late Entry Deadline.

6.6.2 **Technical Meeting**

A Technical Meeting conducted by the Competition Director and Technical Delegate(s) must be scheduled on the day before the first competition day to inform team leaders about competition details and any schedule changes.

6.6.3 **Training**

6.6.3.1 **Official Training.** Official Training must be scheduled on the official arrival day.

6.6.3.2 **Pre-Event Training (PET).** Pre-Event Training must be provided for every individual event on the programme, before Elimination or Qualification for that event starts. For Rifle, Pistol and Running Target individual events, each athlete must be allowed to train on his allocated competition target for a minimum of 40 minutes per relay (30 minutes per relay for Rapid Fire Pistol, 15 minutes per athlete for Running Target) on a day before the event, where ever possible. This is in addition to the Official Training day(s) in the programme (for Shotgun, see Rule 9.6.2.1). If Mixed Team events follow comparable individual events, Pre-Event Training with open target allocations may be scheduled for these events when time is available in the schedule.

6.6.3.3 **Unofficial Training.** In addition to Official Training and scheduled Pre-Event Training, athletes should be given additional Unofficial Training opportunities when the shooting ranges are available.

6.6.3.4 **Electronic training/tracking devices**

Electronic training/tracking devices must not be used during Pre-Event Training or competition (elimination, qualification, finals), but may be allowed during official and unofficial training.

6.6.4 **Entries and Entry Confirmation**

National Federations must submit entries to the ISSF Online Registration Service by the Final Entry Deadline 30 days before the official arrival day (Rule 3.8.3.2).

a) Late Entries may be submitted until three days before the official arrival day if an additional penalty is paid and entry spaces are available (Rule 3.8.3.3);

CamScanner

b) Entry Confirmations and the payment of applicable entry fees to the Organizing Committee, together with Entry Verification Forms must be completed by team leaders upon arrival (Rule 3.8.4.1); and

c) **Entry Changes** can only be made in accordance with Rule 3.8.3.4. Entry Changes must be completed not later than 12:00noon on the day before the Pre-Event Training for a particular event.

6.6.5 **Start Lists**

a) Start lists with firing point and relay allocations must be published and distributed not later than 16:00 hrs on the day before Pre-Event Training for Rifle-Pistol events and the day of Pre-Event Training for Shotgun events. For Mixed Team, see also rule 6.18.1.4

b) **Sustainability option:** If the organizer provides a comprehensive email distribution system or a wireless internet system that is generally available throughout the venue, and a public access information station, the organizer may, with the approval of the Technical Delegate, use a paperless system where printed start lists are not distributed; and

c) **Substitutions.** An athlete, in a team event only, may in exceptional circumstances be replaced by an already registered athlete not later than one (1) hour before the scheduled start time for that event. This rule also applies for competitions composed of several parts or carried out over several days.

6.6.6 **Principles for Firing Point Allocation in Rifle and Pistol**

a) The allocation of athletes to firing points and relays in Qualification must be done by random under the supervision of the Technical Delegate with a computer programme designed for this purpose. If there is more than one Relay, then the top 30 Ranked athletes should be allocated in Relay 2.

b) The allocation of athletes to firing points in the Final will also be by random, as Rule 6.17.1.2.

c) Whenever draws are used to determine firing positions the Technical Delegate must approve the range constraints to be taken into account; the Technical Delegate may approve the squadding of MQS-only, RPO and OOC athletes in specific sections of a range.

d) Individual athletes and teams (nations) should be able to shoot under conditions that are as nearly equal as possible;

e) Athletes from the same nation should not be allocated adjacent firing positions;

f) Athletes from the same nation should be divided as equally as possible between relays;

g) If there are more athletes than targets in Air Rifle or Air Pistol events, targets must be distributed by drawing lots for two (2) or more relays;

h) If more than one relay is used in team competitions, team members must be distributed equally between the relays;

i) If a Rifle competition lasts for more than one day, all athletes must fire an equal number of shots in the same position or positions each day; and

j) When a Pistol event is divided into two (2) stages or days, all athletes must

CamScanner

finish the first stage before the second stage or day may begin. All athletes must fire an equal number of series on each day of a two-day competition.

6.6.6.1 **Elimination Events for Outdoor 50m and 300m Ranges**

If the number of athletes exceeds the useable capacity of the range, an Elimination must be conducted. This requirement may be waived by the Technical Delegate when required by schedule limitations.

a) Any Elimination must be over the complete course of fire; Scores attained in Elimination will be used for any athletes Team Events results entered in that event.

b) The top 30 ranked athletes will be squadded on the second Elimination of the day. All remaining athletes are squadded at random.

c) Elimination relays should be scheduled on the day before the Qualification is scheduled;

d) Qualification athletes must consist of a proportionate number of highest-ranking athletes from each Elimination relay, taking the number of starts on the start-lists into account. The number of athletes who qualify must be announced at the Technical Meeting.

e) **Formula**: The usable number of firing points is divided by the total number of athletes on the start-lists multiplied by the number of athletes on the start-list for each relay to give the number of athletes going forward from the Elimination to the Qualification, e.g. 60 firing points and 101 athletes:

1st relay: 54 athletes = 32.08 ≈ 32 athletes forward;

2nd relay: 47 athletes = 27.92 ≈ 28 athletes forward;

f) When Eliminations are required, team members/nations must be equally divided between the Elimination relays. Team scores are taken from these relays;

g) If insufficient targets are available to allocate two team members from each team to the first relay and the remaining member from each team to the second relay, then it will be necessary to have three relays with one member from each team on each relay;

h) An athlete who does not qualify must not be allowed to participate further in the event; and

i) If there are tied scores for the last places in an Elimination the order of rank will be determined according to tie breaking rules.

j) If an Elimination is not scheduled in Junior World Cups and multiple relays are scheduled, Team Leaders must be allowed to designate their athletes who will be squadded on the first and subsequent relays.

k) In 50m 3P event qualification, if only one Relay, then this is considered as Stage 2 and the top 8 will proceed to the Final.

6.6.6.2 **Schedules and Squadding – 25m Rapid Fire Pistol Men**

CamScanner

a) The second 30-shot stage must begin only after all athletes complete the first 30-shot stage. If there are fewer athletes than are necessary to completely fill all relays, the allocation of firing points should be done so that gaps are left in the last relays of the first and second stages;

b) For the 2nd stage, firing point allocation will be in order of ranking according to scores fired in the first 30-shot stage, with the lowest ranked athletes shooting in the first relay. Start positions within each relay will be decided by a random draw.

6.6.6.3 **Schedules and Squadding -- 25m Pistol Women**

The event may be scheduled to take place on one or two days. If possible, the event should be scheduled to take place on two days with the rapid-fire stage and Final taking place on the second day. If the event is scheduled over two days, the PET before the first day should be for the precision stage. There should be a second PET on the first competition day, after the precision stage, for the rapid- fire stage.

6.6.6.4 **Shotgun** squadding and draw rules are found in Rule 9.11.2.3.

6.6.6.5 **Running Target** squadding and draw rules are found in Rule 10.7.3.1.

6.7 COMPETITION CLOTHING AND EQUIPMENT

6.7.1 The ISSF establishes specific standards for competition clothing and equipment that athletes may use in ISSF Championships and for Equipment Control testing to check those standards in order to safeguard the principles of equal and ethical competition where no athlete can gain an unfair advantage over other athletes.

6.7.2 Athletes are responsible for ensuring that all items of equipment and clothing used by them in ISSF Championships comply with ISSF Rules.

6.7.3 All athletes' equipment is subject to checks by the Equipment Control Jury and an Equipment Control Section established by the Organizing Committee as well as by the respective Competition Juries.

6.7.4 **Standards for Clothing and Equipment**

6.7.4.1 Rules governing specific equipment used by athletes in a particular discipline are found in the Rules for that discipline.

6.7.4.2 The use of any special devices, means or clothing, including the use of Kinesio, medical or similar taping, which immobilizes or unduly reduces the movement of the athlete's legs, body or arms, is prohibited for Rifle, Pistol and Running Target athletes in order to ensure that athletes' performance skills are not artificially improved.

6.7.4.3 Radios, iPods, or any similar type of sound producing or communication systems are prohibited on the FOP during competition and training, except when they are used by competition officials.

6.7.4.4 Mobile phones or other hand-held communication devices (i.e. tablets, etc.), electronic devices or wrist-worn devices (i.e. smart watches) may not be used by athletes on the firing line.

6.7.5 **ISSF Dress Code**

CamScanner

It is the responsibility of athletes, coaches and officials to appear on the ranges dressed in a manner appropriate for a public sports event. Clothing worn by athletes and officials must comply with the ***ISSF Dress Code***. See 6.22 for the full ***ISSF Dress Code***.

6.7.6 **Equipment Control**

6.7.6.1 The Organizing Committee must establish an Equipment Control Section to perform equipment control checks under the supervision of the Equipment Control Jury. An Equipment Control checking service must be available to all athletes so that they may have their equipment checked prior to the competitions. To ensure compliance with ISSF Rules, the Equipment Control Jury and Equipment Control Section must conduct random post-competition testing (6.7.9).

6.7.6.2 **Equipment Control Procedures**

a) The Organizing Committee must inform team officials and athletes where and when they may have their equipment inspected prior to or during the competitions;

b) The Equipment Control Section must be open to provide voluntary inspections for athletes' equipment, starting with the Official Training day and continuing through the last day of Rifle-Pistol-Running Target competition;

c) ISSF calibration test equipment must be used to check testing instruments before each day of testing and when a disqualification is considered during post-competition testing;

d) Athletes are encouraged to bring any items of equipment to the Equipment Control Section for checking if they are not certain if they will pass a post-competition check;

e) The Equipment Control Section must ensure that all Rifle shooting jackets and shooting trousers are identified with a seal bearing a unique serial number that is registered to the athlete. The seal must be designed so that it cannot be removed without breaking the seal. Seals previously issued for one-time- only clothing inspections fulfil this requirement. Jackets and trousers with no seal must be checked for compliance with ISSF Rules and have seals affixed to them that are registered for the athlete. The Equipment Control and Rifle Juries will use the jacket and trouser seals to conduct random checks for compliance with Rule 7.5.1.2;

f) The Equipment Control Section must keep a register of the guns, shooting jacket and trousers that they check, with the name of the athlete, the make (manufacturer), serial number and calibre of each gun checked on an Equipment Control Card;

g) It is the athlete's responsibility that any air or CO2 cylinder is within manufacturer's validity date (maximum of ten (10) years); this may be checked by Equipment Control and advisory recommendations may be given;

h) One copy of the Equipment Control Card is given to the athlete who must retain this card with his equipment at all times. If an athlete loses his Equipment Control Card, there is a EUR 10.00 fee to replace it; and

i) If a Rifle clothing item is resubmitted for a second or subsequent test during the same Championship, a reinspection fee of EUR 20,00 will apply. No item of

CamScanner

clothing may be submitted to Equipment Control more than three times. If an item does not pass on the third occasion this must not be used in competition and doing so will result in disqualification.

6.7.7 **Bib (Start) Numbers and Items Worn by Athletes**

6.7.7.1 All athletes must be provided with a Bib Number (Start Number) to wear on the back of the outer garment above the waistline during the entire competition. Bib Numbers must display the athlete's allocated number for that Championship, family name, initial and nation (IOC abbreviation only). If a flag of the nation is used, it must be placed to the left of the IOC abbreviation. The height of the letters in names should be as big as possible, but no letters or numbers may be less than 20mm (for Shotgun, see 9.13.2, 9.13.3).

6.7.7.2 **Bib Numbers** must be worn by all athletes, on their backs and above the waist, at all times while participating in Pre-Event Training and all stages of competition. If the Bib Number is available and not worn, the athlete may not compete. New Bib Numbers will be issued at Reporting Time prior to Finals

6.7.7.3 All athletes must comply with **ISSF Eligibility, ISSF Commercial Rights and ISSF Sponsorship/Advertising Rules**. These rules govern such matters as emblems, sponsorship, advertising and commercial markings on clothing together with controls and sanctions.

CamScanner

6.7.8 **Blinders**

6.7.8.1 **Side Blinders** (on one or both sides) attached to the hat, cap, shooting glasses, or to a headband, not exceeding 60 mm deep are permitted for Shotgun athletes only (Rule 9.13.4) (A). The front edge of a side blinder, when viewed from the side, must not extend more than 30mm forward of the centre point of the forehead. Side blinders must be made of plastic material only.

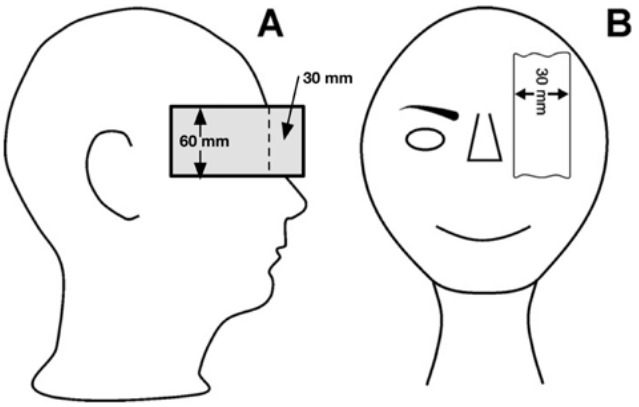

6.7.8.2 **One Front Blinder** to cover the non-aiming eye that is not more than 30mm wide is permitted for all athletes (B).

6.7.9 **Post-Competition Testing**

6.7.9.1 Post-competition checks must be conducted after Elimination and Qualification competitions and during the reporting time before Finals according to procedures specified in the "ISSF Equipment Control Guidelines." The Equipment Control Jury is responsible for supervising the conduct of all post-competition checks. Judges of the same gender as the athletes must be available for clothing and taping checks. Failure of the following specific post-competition checks must result in disqualification (DSQ):

a) Rifle: Shooting clothing, underclothing, taping and rifle specifications (trigger weighing when applicable);

b) Pistol: Shoes, taping, trigger weighing, pistol dimensions and grips (8.12), ammunition velocity checks and the weighing of bullets where applicable;

c) Shotgun: See Shotgun Rules; and

d) Running Target: Rifle weight, telescope power (10m), trigger weight

(50m10.4.3.6 a) and marker tapes.

e) All disciplines: Failure to report for a post-competition check after being given written notice to report.

6.7.9.2 If an athlete fails a post-competition check, the Chairman of the Equipment Control Jury or one other Equipment Control or Competition Jury Member must confirm that the test was performed correctly and that the athlete is disqualified. The confirmation procedure must include using ISSF calibration testing equipment to confirm that the testing instruments are measuring accurately.

CamScanner

6.7.9.3 Appeals against a post-competition test disqualification may be submitted to the Jury of Appeal. The Jury of Appeal must decide if the test was performed correctly, but it may not repeat the test. The Jury of Appeal can overturn a post-competition check disqualification only if it finds that the test was performed incorrectly.

6.7.9.4 Targeted testing (selection of athletes on a non-random basis) may be done when a Jury has credible evidence that an athlete has altered or attempted to alter his gun, clothing or equipment.

6.8 COMPETITION JURY DUTIES AND FUNCTIONS

Juries are responsible for advising, assisting and supervising the competition officials appointed by the Organizing Committee.

a) Competition Juries (Rifle, Pistol, Shotgun, Running Target and Target Sprint) supervise the conduct of events in their respective disciplines;

b) RTS (Results, Timing and Scoring) Juries supervise scoring and results operations; and

c) Equipment Control Juries supervise the testing of athletes' clothing and equipment.

6.8.1 Range Officers, RTS Officers and Referees appointed by the Organizing Committee are responsible for the actual conduct of the competitions while Juries act in an advisory and supervisory capacity. The Range Officers and Juries are mutually responsible for conducting the training and competitions in accordance with ISSF Rules and must ensure that these Rules are enforced in a fair and equitable manner during the competitions.

6.8.2 All Jury Members must wear the official ISSF Jury vest (red colour) when on duty. Jury vests can be purchased from ISSF Headquarters. It is recommended that all Range Officers wear a distinctive vest or other means of identification (preferably in green colour) when on duty. It is recommended that all Target Officers or other personnel who must go forward of the firing lines to perform their duties wear a vest in a fluorescent colour or high visibility armbands.

6.8.3 Before the beginning of the competition, the Competition Juries must examine the shooting ranges and check the organizational arrangements and organization of operating personnel, etc., to ensure that they conform to ISSF Rules. Jury checks should be done in coordination with any earlier checks made by the Technical Delegate.

6.8.4 Jury Members must continuously observe the shooting positions and the equipment of the athletes.

6.8.5 Jury Members have the right to examine the guns, equipment, positions, etc., of the athletes at any time, during training and competitions.

6.8.6 During training and competitions, Jury Members are responsible for checking athletes clothing and equipment for compliance with ISSF Sponsorship/ Advertising Rules (4.4-4.7 and 6.7.7.3);

6.8.7 During competitions, Jury Members should not approach an athlete while he is firing a shot (or series of shots in rapid fire events) unless a safety issue requires immediate action.

6.8.8 A majority of the Jury must always be present on the range during competitions so that, when necessary, the Jury can meet and make decisions immediately.

CamScanner

6.8.9 Jury Members have the right to make individual decisions during competitions, but should confer with other Jury Members and Range Officers when any doubt exists. If a Team Official or Athlete does not agree with the decision of an individual Jury Member, a decision of the majority of the Jury may be requested by making a written protest.

6.8.10 Jury Members must be completely impartial in making decisions, regardless of the nationality, racial, religious, ethnic or cultural identity of any athletes who are involved.

6.8.11 Juries must deal with any protest(s) that are submitted to the Jury in accordance with ISSF Rules. After consultation with the Range Officers and others directly concerned, the Jury must rule on any protest.

6.8.12 A Jury must delay the start of a Final if a protest involves athletes who could, depending upon the protest decision, qualify for the Final. The RTS Jury may release a Final Start List if a protest does not involve athletes who could qualify for the Final. Official Final Results cannot be released until all protests and appeals are decided.

6.8.13 A Jury must decide all cases that are not provided for in the ISSF Rules. Such decisions must be made within the spirit and intent of ISSF Rules. Any such decisions must be included in a Jury Chairman's Report that is submitted to the Technical Delegate after each Championship.

6.8.14 Athletes and Team Officials must not be members of a Jury. Jury Members must not advise, coach or assist athletes beyond the scope of the ISSF Rules at any time during the competition.

6.8.15 The Jury Chairman is responsible for directing Jury schedules and activities for ensuring the presence of sufficient member(s) of the Jury at all times, including all Official and Pre-Event Training.

6.8.16 The Jury Chairman must prepare a report on Jury decisions and actions to be submitted to the ISSF Secretary General through the Technical Delegate as soon as possible after the Championship.

6.9 ORGANIZING COMMITTEE COMPETITION OFFICIALS

6.9.1 Chief Range Officer (CRO) Duties and Functions

A Chief Range Officer (CRO) must be appointed for each range. The CRO is in charge of all Range Officers (RO) and range personnel and is responsible for the correct conduct of the shooting event. The CRO is responsible for giving all range commands and for ensuring the cooperation of range personnel with the Jury. The CRO is responsible for the rapid correction of any equipment failures and for making available the necessary experts and supplies to operate the range. It is strongly recommended that an Assistant CRO be appointed to serve as a backup for the CRO, especially in maintaining range documentation and Range Incident Reports (Form IR) regarding events and irregularities that occur during the competition.

6.9.2 Range Officer (RO) Duties and Functions

A Range Officer (RO) must be appointed for each Range Section or for each ten (10) firing points. Range Officers must:

a) Be responsible to the CRO for the conduct of the competition in the target section entrusted to them;

CamScanner

b) Check the names and Bib Numbers of athletes to ensure that they correspond with the start list;

c) Ensure that the athletes' guns, equipment and accessories have been examined and approved;

d) Check athletes' shooting positions and equipment and advise the Jury of any possible violations;

e) Ensure that the commands of the CRO are followed;

f) Take necessary actions regarding a malfunction, protest, disturbance, or any other matter arising during the competition;

g) Receive verbal protests and immediately report them to a Jury Member;

h) Record all irregularities, disturbances, penalties, malfunctions, cross-fires, extra time allowed, repeated shots authorized, etc. on Range Incident Report Forms (IR) and on the target or printer strip as appropriate; and

i) Refrain from any conversations with athletes or from making other comments regarding scores.

6.9.3 Chief RTS (Results, Timing and Scoring) Officer (CRTSO) Duties and Functions

The CRTSO must be appointed for each Championship. He is in charge of all RTSO and Entry and Results Personnel. The CRTSO is responsible for the correct conduct of all scoring and results operations at the Championships.

6.9.4 RTS Officers (RTSO) Duties and Functions

One RTSO should be appointed for each range that is used for Qualification competitions. The RTSOs are responsible for working with the RTS Jury, Competition Jury, ROs and Official Results Provider to facilitate the conduct of scoring and results operations on their ranges.

6.10 EST COMPETITION OPERATIONS

6.10.1 EST Technical Officers

a) EST Technical Officers are responsible for operating and maintaining the Electronic Scoring Target equipment;

b) EST Technical Officers may advise Range Officers and Jury Members, but they must not make any decisions regarding the application of ISSF Rules; and

c) EST Technical Officers are designated by the Official Results Provider or the Organizer and must be persons with special training in EST operations and electronic competition management systems (computer software).

6.10.2 Target Officers

a) Target Officers are appointed by the Organizing Committee to assist in the operation and maintenance of EST:

b) Before each relay of each event, Target Officers must ensure that there are no shot holes on the white surface of the target and that all shot marks on the frame are clearly indicated;

c) During competitions, Target Officers patch Backing Targets and Backing Cards and change the Control Sheets; and

CamScanner

d) **Backing Targets**, **Backing Cards** and **Control Sheets** must not be patched or changed until after all scoring is completed.

6.10.3 **Jury Member Duties – Electronic Scoring Targets**

6.10.3.1 Member(s) of the RTS Jury must be present on the ranges to supervise scoring and results operations and assist in the resolution of any questions or protests relating to scoring. Members of the Competition Jury must assist in cases where actions or decisions need to be taken and there are only two or fewer RTS Jury Members available.

6.10.3.2 Before each relay of an event, a Jury Member must inspect the electronic scoring targets to confirm that:

a) There are no shot holes on the white surface of the target;

b) Any shot marks on the frame are clearly indicated;

c) The Control Sheets are renewed; and

d) The Backing Cards and Backing Targets have no shots outside of the central area that is covered by the Control Sheet.

6.10.4 **Shooting on Electronic Scoring Targets**

a) Athletes must familiarize themselves during training with the control buttons that alter the target presentation on the monitor screen (ZOOM) and that change from a Sighting target (SIGHTING) to a Match target (MATCH);

b) In 10m, 25m and 50m single position events, changing from Sighting to MATCH shots is under control of range personnel. If any athlete is in doubt, he must ask a Range Officer for assistance;

c) In 3-Position events, after athletes complete the kneeling or prone positions, changing from MATCH to Sighting and back to MATCH is the responsibility of the athlete. Athletes may fire unlimited Sighting shots before starting MATCH firing shots in the prone and standing positions. No additional time is allowed for these Sighting shots. If an athlete inadvertently fails to switch from MATCH to Sighting after changing positions, any shots recorded as extra shots in the previous position must be nullified and the target must be reset to Sighting.

d) It is not permitted to **obscure the athlete's monitor-screen** or any part of the screen. The whole screen must be visible to the Jury and range personnel;

e) Athletes and range officials must **not touch the printer control panels** and/ or printout before the end of the relay or event, except when authorized by the Jury;

f) Athletes should sign the printout (next to the score total) before leaving the range to identify their score.

g) When an athlete fails to sign the printout a Jury Member or range official should initial this printer strip to allow it to be sent to the RTS Office.

6.10.5 **Target Scoring Complaints During Sighting Shots**

If an athlete complains during sighting shots about the correct recording or evaluation of the shot(s), the Jury may offer to move him to another firing point.

a) The athlete will be given appropriate extra time;

b) The Jury will, as soon as possible, examine the sighting shot(s) on the original firing point by applying the **Procedure for EST Examination**; and

CamScanner

c) If this subsequent examination confirms that the target on the original firing point provided correct results, the athlete will be penalized with the DEDUCTION of two (2) points from the lowest value shot of his first competition series.

6.10.6 **Failure of the Paper or Rubber Band to Advance**

If the Jury confirms that the problem causing an athlete complaint is because the paper or rubber band is not advancing properly:

a) The athlete will be moved to a reserve position;

b) He will be permitted unlimited sighting shots to be taken within the time remaining for the event plus any additional time granted;

c) He will repeat the number of MATCH shots determined by the Jury plus the number of shots necessary to complete the event;

d) After the relay, the RTS Jury will decide which shots are to be counted from each target; and

e) The athlete will be credited with the scores of all shots that were correctly displayed on the monitor of the first target, plus the scores of all MATCH shots fired on the second target that were necessary to complete the course of fire.

6.10.7 **Protest Concerning a Shot Value**

If a shot registers and displays, but the athlete protests the value indicated in accordance with Rule 6.16.5.2:

a) After the relay, the detailed printer results (LOG-Print) must be generated by the Technical or Range Officers for all firing lanes on which complaints or protests have been made, and for the immediately adjacent lanes, before the target systems are reset for the next relay;

b) After the completion of the relay, the **Procedure for EST Examination** will be applied;

c) Any non-indicated or incorrectly indicated shot must be scored by the RTS Jury; and

d) If the RTS Jury determines that a protested shot was scored correctly, a two point penalty will be applied (6.16.5.2.c).

6.10.8 **PROCEDURE FOR EXAMINING ELECTRONIC SCORING TARGETS FOLLOWING A SCORE PROTEST OR COMPLAINT**

6.10.8.1 If there is a score protest, complaint or no indication of a shot, etc., a Jury Member must collect the following items (the number of the firing point and the orientation of the card, sheet or target, the relay and series and the time of collection must be noted on each):

a) The Control Sheet (25m / 50m). If the location of any shot hole is out of the area of the Control Sheet, the geometric relation between the shot holes on the Control Sheet and the Backing Card must be made before the Control Sheet is removed;

b) The Backing Card (25m / 50m / 300m);

c) The Backing Target (25m);

d) The black paper strip (10m);

e) The black rubber band (50m);

CamScanner

f) The Range Incident Report;

g) The LOG print; and

h) The data record from the electronic scoring target computer (if necessary).

6.10.8.2 A Jury Member must examine the face of the EST and the frame and record the location of any shots outside the black aiming mark.

6.10.8.3 No CLEAR LOG must be made before the RTS Jury has given permission.

6.10.8.4 The number of shot holes must be counted and their location taken into account.

6.10.8.5 Jury Members must examine these items and then make independent assessments before a formal Jury decision is made.

6.10.8.6 A Jury Member must supervise any manual intervention of the control computer results (e.g. the recording of penalties, corrected scores after malfunctions etc.).

6.10.9 **EST FAILURE**

These Rules apply to 10m, 50m and 300m EST. For procedures concerning 25m EST failures, see Rule 8.10. For procedures concerning Running Target EST failures, see Rule 10.11.

6.10.9.1 **When ALL Targets on a Range Fail**

a) The time of failure and the expired shooting time must be recorded by the Chief Range Officer and the Jury;

b) All completed competition shots of each athlete must be counted and recorded. In the event of a range power supply failure, this may involve waiting until the power supply is restored to enable the number of shots registered by the target, not necessarily on the firing point monitor, to be established; and

c) After the failure is rectified and the full range is in operation, an **additional five (5) minutes** will be added to the competition time remaining. The time for recommencing is to be announced over the loudspeaker system at least five (5) minutes beforehand. Athletes must be allowed to resume their position in the five (5) minutes before the competition restarts. Unlimited sighting shots must be allowed during the remaining shooting time, but only before competition shots are resumed.

6.10.9.2 **When a SINGLE Target Fails**

a) If the EST cannot be repaired within five (5) minutes, the athlete must be moved to a reserve position;

b) When he is ready to shoot, an **additional five (5) minutes** will be added to the competition time remaining; and

c) He will be permitted unlimited sighting shots before he starts the remaining competition shots.

6.10.9.3 **When a Shot Fails to Register or Display on the Monitor**

The athlete must immediately inform the nearest Range Officer of the failure. The Range Officer must make a written note of the time of the complaint. One or more Jury Member(s) must go to the firing position. The athlete must be directed to fire one more MATCH shot at his target:

If the value and location of this shot is registered and displayed on the monitor:

CamScanner

a) The athlete must be directed to continue the competition;

b) The value, location and time of firing of this extra shot must be recorded, its shot-number (after including the missing shot) and its value and its shot-location, and the firing point number must be given to the Jury in writing and recorded on the Range Register and a Range Incident Report;

c) After the end of that relay, the **Procedure for EST Examination** will be applied. Using this information and the time of the extra shot and its location, the RTS Jury will determine whether all shots, including the extra shot, are recorded on the computer record;

d) If all the shots are recorded correctly, then the questioned shot (shot that did not register or display) will be counted in the score of the athlete, as well as the shot fired immediately after (as the "extra" shot), but the last shot fired (extra to the competition) will be annulled;

e) If the questioned shot was not located by applying the **Procedure for EST Examination** or was confirmed as an off-target miss (Note: This means a questioned 10m shot could not be found on the witness strip or target face; a questioned 25m shot could not be found on the backing target, control sheet or backing card or there was evidence that a questioned 50m or 300m shot was an off-target miss), then the questioned shot must be scored as a miss and the last shot fired (extra to the competition) must be nullified; or

f) If the questioned shot was found or was located in the computer memory, the RTS Jury must determine and count the score of the questioned shot; or

g) If a questioned 50m or 300m shot is not found, the Jury must decide whether to score the missing shot as a miss and nullify the last shot or, if there is no credible evidence that the questioned shot was an off-target miss, the Jury may conclude that a target system anomaly occurred and count the extra shot in lieu of the missing shot and the last shot fired.

6.10.9.4 OR: If the extra shot fired as directed does not register or display and the EST cannot be repaired within five (5) minutes:

a) The athlete must be moved to a reserve position;

b) When he is ready to shoot, an **additional five (5) minutes** will be added to the competition time remaining and he will be permitted unlimited sighting shots;

c) **In 10m and 50m Rifle and Pistol Events,** the athlete will repeat the two (2) MATCH shots that did not register or display on the previous target used.

6.10.9.5 OR: **In Running Target Events,** the athlete will be permitted two (2) minutes to resume his position and then allowed two (2) additional sighting shots (Rule 10.7.4.2). Then he will repeat the two (2) competition shots which did not register or display on the previous target used and fire the remaining shots of the series. The athlete will be credited with the score of all the shots that were displayed on the monitor of the first target plus the score of all the properly fired competition shots that were displayed on the second target used. If the two (2) extra shots were later found in the computer record of the previous target they will be annulled.

CamScanner

6.11 COMPETITION PROCEDURES (SEE ALSO 6.17, FINALS COMPETITION PROCEDURES)

6.11.1 Rules for 10m and 50m Rifle and Pistol Events

6.11.1.1 Preparation and Sighting Time

Athletes must be called to the line at least 25 minutes before the published START time of the event, allowed 10 minutes to setup their equipment, and then allowed 15 minutes Preparation and Sighting Time before MATCH firing starts to make their final preparation and fire unlimited **sighting shots**.

a) The Preparation and Sighting Time must be timed to end approximately 30 seconds before the official starting time for MATCH firing.

b) Sighting targets must be visible at least 10 minutes before the Preparation and Sighting Time starts;

c) Athletes may not place their guns and equipment on their firing points until the Chief Range Officer has called the athletes to the line;

d) If there is more than one relay, each relay must be allowed the same amount of time to bring their equipment to the firing line;

e) After the Chief Range Officer calls athletes to the line, they are permitted to handle their guns, dry fire (safety flags may be removed for dry firing) or carry out holding and aiming exercises on the firing line before the Preparation and Sighting Time starts; in Finals, athletes may not remove safety flags or dry fire until the Preparation and Sighting Time starts;

f) Pre-competition checks by the Jury and Range Officers must be completed during the 10 minutes before the Preparation and Sighting Time starts;

g) The Preparation and Sighting Time begins with the command **"PREPARATION AND SIGHTING TIME…START;"** No shot may be fired before the command **"START;"**

h) An athlete who fires a shot or shots **before the "START"** command for the Preparation and Sighting Time may be disqualified if safety is involved. If safety is not involved (6.2.3.5), the first competition shot must be registered as a miss (0);

i) After 14 minutes, 30 seconds have elapsed in the Preparation and Sighting Time, the Range Officer must announce **"30 SECONDS."**

j) At the end of the Preparation and Sighting Time, the Chief Range Officer must command **"END OF PREPARATION AND SIGHTING…STOP."** There must be a brief pause of approximately 30 seconds when the Target Officer will reset the targets for MATCH firing; and

k) If an athlete fires a shot after the command **"END OF PREPARATION AND SIGHTING…STOP"** and before the **"MATCH FIRING…START"** command, the shot must not be counted as a MATCH shot and a two (2) point penalty must be applied to the first competition shot.

l) Malfunctions will be governed according to ISSF Rule 6.13. No additional time will be allowed for an equipment malfunction, but the Jury may allow additional sighting shots on return to the firing line if the malfunction is repaired, but all shots must be fired within the original time allowed.

CamScanner

6.11.1.2 **START of MATCH Firing**

a) When all targets are reset for MATCH firing, the Chief Range Officer will command **"MATCH FIRING…START."** MATCH firing is considered to have started when the CRO has given the command **"START;"**

b) Every shot fired after the start of MATCH firing must be recorded as a MATCH shot, however, dry firing is allowed;

c) After the start of MATCH firing, no further sighting shots are allowed, except for position changes in 50m and 300m Rifle 3-Position events (see Rule 7.7.3) or when permitted by the Jury in accordance with these Rules;

d) Any further sighting shot(s) fired in contravention of this rule must be scored as miss(es) in the competition;

e) The CRO must inform athletes by loudspeaker of the time remaining at both ten (10) minutes and five (5) minutes before the end of the competition time;

f) A shot or shots that are not fired during the MATCH firing time must be scored as miss(es) on the last competition target(s), unless the CRO or a Jury Member has authorized extra time; and

g) If, during MATCH firing on 10m ESTs, the Jury directs an athlete to move his position laterally (sideways) within his firing point by 30 cm or more, the athlete may be offered additional sighters and 2 minutes additional time before he resumes MATCH firing.

6.11.1.3 **"STOP" COMMAND**

The competition must stop at the command **"STOP."**

a) If a shot(s) is fired after the command **"STOP,"** that shot(s) must be scored as a miss; and

b) If the shot(s) cannot be identified, the best hit(s) must be deducted from the score of that target and scored as miss(es).

6.11.2 **Specific Rules for 10m Air Gun Events**

6.11.2.1 If an athlete **releases the propelling charge** prior to the Preparation and Sighting Time he must be given a **WARNING (Yellow Card)** for the first violation and a **DEDUCTION (Green Card)** of two (2) points from the lowest value shot of the first MATCH series for the second and subsequent violations.

6.11.2.2 Any release of the propelling charge, after MATCH firing starts, without a hit on the target will be scored as a miss. Dry firing without release of the propelling charge is permitted except during Finals.

6.11.2.3 If an athlete wishes to change, or to fill, a gas or air cylinder, he must leave the firing point to do so, after obtaining permission from the Range Officer. No extra time is allowed to change or fill a gas or air cylinder during a competition.

6.11.2.4 The gun may only be loaded with one (1) pellet. When a gun is accidentally loaded with more than one (1) pellet:

a) If the athlete is aware of the situation, he must raise his non-shooting hand to indicate to a Range Officer that he has a problem. A Range Officer must then supervise the unloading of the gun and no penalty will be incurred. No extra time will be allowed for this; or

b) If the athlete is unaware of the situation and fires two pellets at the same time, he must report this to a Range Officer. If there are two (2) hits on the

CamScanner

target, the score of the higher value shot will be counted and the second shot will be annulled. If there is only one (1) hit on the target, this will be counted.

6.11.3 **Interruptions in 10m Events, 50m Rifle and Pistol Events and 300m Rifle Events**

6.11.3.1 If an athlete must stop firing **for more than three (3) minutes** through no fault of his own and this interruption was not caused by a malfunction of his gun or ammunition, he may demand extra time equal to the amount of time lost, or the time remaining when the interruption occurred, plus one (1) minute, if during the last five (5) minutes of the competition.

6.11.3.2 If an athlete is interrupted **for more than five (5) minutes** through no fault of his own and this interruption was not caused by a malfunction of his gun or ammunition, **or if the athlete is moved to another firing point,** he may have additional unlimited sighting shots at the beginning of his remaining shooting time together with any time extension granted plus an additional five (5) minutes.

a) Range Officers or Jury Members must ensure that a complete explanation is recorded on a Range Incident Report; and

b) Any **extension of time** allowed by the Jury or Range Officers must be documented, stating the reason on a Range Incident Report.

6.11.4 **Late Arrival By Athlete**

If an athlete **arrives late** for a competition, he may participate but will not be given any extra time. If an athlete arrives after the Preparation and Sighting Time, no additional sighting time will be given but sighting shots are allowed. When it can be proven that an athlete's late arrival was due to circumstances beyond his control, the Jury must grant extra time, including time for Preparation and Sighting if this does not delay the start of the Final or disrupt the overall shooting programme. In this case the Jury will determine when and on which firing point the late athlete may start.

6.11.5 **Irregular Shots -- Too Many Shots in an Event or Position**

If an athlete in a 10m, 50m or 300m event fires more shots in the event or position than are provided for in the programme, the extra shot(s) must be annulled on the last competition target(s). If the shot(s) cannot be identified, the highest value shot(s) must be annulled on the last competition target. The athlete must also be penalized by a deduction of two (2) points for each excessive shot fired, deducted from the lowest value shot(s) in the first series.

6.11.6 **Crossfires**

6.11.6.1 Crossfires of competition shots must be scored as misses.

6.11.6.2 If an athlete crossfires a sighting shot on the sighting target of another athlete no penalty is incurred.

6.11.6.3 If an athlete crossfires a sighting shot on the MATCH target of another athlete, he must be penalized by the deduction of two (2) points from his own score deducted from the first series.

6.11.6.4 If an athlete receives a confirmed crossfire shot and it is impossible to determine which shot is his, he must be credited with the value of the highest undetermined shot.

6.11.6.5 If there are more hits on an athlete's MATCH target than are provided for in the programme, and if it is impossible to confirm that another athlete(s) fired the

CamScanner

shot(s), the hit(s) of the highest value must be nullified.

6.11.6.6 If an athlete wishes **to disclaim** a shot on his target, he must report this immediately to a Range Officer.

6.11.6.7 If the Range Officer confirms that the athlete did not fire the disputed shot(s), he must make the necessary entry on a Range Incident Report and on the Range Register and the shot must be annulled.

6.11.6.8 If the Range Officer cannot confirm beyond all reasonable doubt that the athlete did not fire the disputed shot(s), the shot(s) must be credited to the athlete and must be so recorded.

6.11.6.9 The following must be considered as reasons to justify the annulment of a shot:

a) If a Range Officer confirms by his observation of the athlete and the target that the athlete did not fire the shot;

b) If a missing shot is reported by another athlete or a Range Officer at approximately the same time, and from within the neighbouring two or three firing points; and

c) When using 300m EST with shot sensors, crossfires should not register on the recipient's target, but an indication will be received at the control centre. The firer, whose target does not receive the expected shot, will be given a miss (zero) and an indication that he has cross-fired.

6.11.7 **Disturbances**

If an athlete claims that he was disturbed while firing a shot, he must keep his gun pointed downrange and immediately inform the Range Officer or Jury Member. He must not disturb other athletes. If the claim is considered justified, the shot(s) must be annulled and the athlete may repeat the shot(s) or series. If the claim is not considered justified, the shot(s) must be credited to the athlete and he may continue shooting; no penalty will be applied.

CamScanner

6.11.8 **Special Competition Regulations**

a) During the Preparation and Sighting Times for all competitions, announcements and/or visual displays may be used to inform spectators about the event. During Preparation and Sighting and Match Firing Times for Elimination and Qualification competitions, music may be played. Music must be played during Finals (6.17.1.11).

b) It is not permitted to put any substance on the floor of the firing point to gain an unfair advantage or to wipe the firing point without permission;

c) It is not permitted to place non-removeable tape or draw lines with a permanent marker on the floor;

d) No one may change or modify any range structure or equipment;

e) Smoking is prohibited in all areas used by athletes and officials as well as in the spectator areas of the ranges;

f) The use of mobile phones, walkie-talkies, pagers or similar communication or electronic devices by athletes, coaches and team officials while on the field of play is prohibited. All mobile phones etc. must be switched off or placed on silent mode;

g) Flash photography is prohibited until after competitions are completed; and

h) Notices must be displayed to inform spectators that mobile phones must be placed on silent mode, that smoking is not permitted and that flash photography is prohibited until competitions are completed.

6.11.9 **COMPETITION PROCEDURES – QUALIFICATION and ELIMINATION STAGES**

6.11.9.1 **10m Air Rifle and 10m Air Pistol Men and Women**

Type of event	Individual
Name of events	10m Air Rifle Men 10m Air Rifle Junior Men 10m Air Rifle Women 10m Air Rifle Junior Women 10m Air Pistol Men 10m Air Pistol Junior Men 10m Air Pistol Women 10m Air Pistol Junior Women
Number of relays	One or more dependent on the number of entries.
Ranges	A 10m enclosed range must be used for all relays.
Targets	Electronic Scoring Targets for all relays.
Scoring	Air Rifle: Decimal scoring Air Pistol: Full ring (integer) scoring Qualification scores are not carried forward to the Final Stage

CamScanner

Qualification procedure	Athletes will be called to the line twenty five (25) minutes before the scheduled Start time for each relay. All athlete checks by the Range Officers must be completed before the start of Preparation and Sighting time.
Preparation and Sighting time.	Fifteen (15) minutes to fire an unlimited number of sighting shots.
Course of fire	Sixty (60) Match shots to be fired in 1 hour 15 minutes. (75mins)
Number of relays	Ideally, all entries should be accommodated in one relay. However, If the number of entries exceeds the number of targets available on the range the athletes must be distributed by drawing lots for two or more relays (see 6.6.6.h)
Subsequent relays	If there is more than one Qualification relay there must be a fifteen (15) minute break between relays before athletes are called to the line, to allow removal of equipment and for the RTS Jury to service the targets and re-face if necessary.
Number to Qualify	The top eight (8) athletes from all relays will progress to the Final. Tied scores will be decided by ISSF tie-breaking Rule 6.15

6.11.9.2 **50m RIFLE 3-POSITIONS MEN AND WOMEN**

Type of event	Individual
Name of events	50m Rifle 3 Positions Men 50m Rifle 3 Positions Men Junior 50m Rifle 3 Positions Women 50m Rifle 3 Positions Women Junior
Number of relays	One or more dependent on the number of entries.
Ranges	A 50m outdoor range must be used for all relays.
Targets	Electronic Scoring Targets for all relays.
Scoring	Full ring (integer) scoring.
Qualification procedure	Athletes will be called to the line twenty five (25) minutes before the scheduled Start time for each relay. All athlete checks by the Range Officers must be completed before the start of Preparation and Sighting time.
Preparation and Sighting time.	Fifteen (15) minutes to fire an unlimited number of sighting shots.
Course of fire	Twenty (20) shots in each position, in the sequence Kneeling, Prone, Standing, in a total time limit of 1hr 30 minutes (90 minutes).
Number of relays	If the number of athletes exceeds the useable capacity of the range, Elimination relays must be conducted. If there are sufficient firing points on the 50m range to accommodate the total number of entries, Elimination relays are unnecessary.

CamScanner

Elimination Procedure Start lists. Subsequent relays	Elimination relays should be scheduled on the day before the Qualification stage. The allocation of athletes to targets will be according to the published Start lists for each relay. The start lists for Elimination relays will be produced as follows: Relay 1 - by random to the maximum of available number of firing points. Relay 2 - The top 30 athletes according to the World Ranking taking part in the competition by random + random to the maximum of available number of firing points. Relay 3 - By random to the maximum of available firing points. If there is more than one Qualification relay there must be a thirty (30) minute break before athletes on subsequent relays are called to the line to allow athletes to remove their equipment and for the RTS Jury to service the targets. Athletes will be called to the line as for Relay 1.
Number of athletes to qualify. Formula	Qualification must consist of a proportionate number of the highest ranking athletes from each of the Elimination relays, taking the total number of entries into account. The number of athletes from each relay who will qualify should be announced as soon as possible. The maximum number of athletes progressing from Elimination to Qualification is dependent on the number of firing points available at the venue. The minimum number is twelve (12). The numbers will be calculated by using the following formula: The usable number of firing points is divided by the total number of athletes on the start lists multiplied by the number of athletes on the start list for each relay. e.g., 60 firing points and 101 athletes: 1st relay: 54 athletes 60 ÷ 101 x 54 = 32.08 (32) athletes 2nd relay: 47 athletes 60 ÷ 101 x 47 = 27.92 (28) athletes The same formula will be used if there are 2 or 3 relays.

6.11.9.3 **50m RIFLE PRONE MEN AND WOMEN**

Type of event	Individual
Format of events Ranking	The events consist of one relay except where the range capacity is insufficient for the number of entries. There will be no Final. The medals will be decided according to the ranking after the Qualification stage.
Name of events	10m Prone Rifle Men 10m Prone Rifle Junior Men 10m Prone Rifle Women 10m Prone Rifle Junior Women 10m Prone Rifle Men
Number of relays	One or more dependent on the number of entries.

CamScanner

Ranges	A 50m outdoor range must be used for all relays.
Targets	Electronic Scoring Targets for all relays.
Scoring	Decimal scoring for all relays.
Preparation and Sighting time. Course of fire Number of relays	Athletes will be called to the line twenty five (25) minutes before the scheduled Start time for each relay. All athlete checks by the Range Officers must be completed before the start of Preparation and Sighting time. Fifteen (15) minutes to fire an unlimited number of sighting shots. Sixty (60) Match shots to be fired in 50 minutes. If the number of entries exceeds the number of targets available on the range, two or more Elimination relays will be necessary.
Elimination Procedure Start lists. Subsequent relays	The allocation of athletes to targets will be according to the published Start lists for each relay. The start lists for Elimination relays will be produced as follows: Relay 1 - by random to the maximum of available number of firing points. Relay 2 - by random to the maximum of available number of firing points. Relay 3 - by random to the maximum of available number of firing points. If there is more than one Qualification relay there must be a thirty (30) minute break before athletes on subsequent relays are called to the line to allow athletes to remove their equipment and for the RTS Jury to service the targets. Athletes will be called to the line as for relay one.
Number of athletes to qualify.	Qualification must consist of a proportionate number of the highest ranking athletes from each of the Elimination relays, taking the total number of entries into account. The number of athletes from each relay who will qualify should be announced as soon as possible. The maximum number of athletes progressing from Elimination to Qualification is dependent on the number of firing points available at the venue. The minimum number is twelve (12). The numbers will be calculated by using the same formula as for the 50m Three-Position event.

CamScanner

6.11.9.4 300m RIFLE PRONE MEN AND WOMEN

The event will be conducted in the same way as for 50m Prone Rifle but with the following differences:

Ranges	A 300m outdoor range must be used for all relays.
Scoring	Full ring (integer) scoring.
Electronic Scoring Targets Pit operated or Target carriers (Paper targets)	Sixty (60) Match shots to be fired in 50 minutes. Sixty (60) Match shots to be fired in 1 hour 15 minutes (75 minutes).

6.11.9.5 300m STANDARD RIFLE MEN AND WOMEN

The event will be conducted in the same way as for 50m 3P Rifle but with the following differences:

Electronic Scoring Targets Pit operated or Target carriers (Paper targets) Ranges	Twenty (20) Match shots in each position in a total time limit of 1 hour 45 minutes. Twenty (20) Match shots in each position in 2 hours 15 minutes

6.11.9.6 25m Rapid-Fire Pistol Men

Type of event	Individual
Name of events	25m Rapid Fire Pistol Men 25m Rapid Fire Pistol Men Junior
Number of stages	Two stages
Number of relays	One or more dependent on the number of entries.
Ranges	A 25m outdoor range should be used for all relays.
Targets	Electronic Scoring Targets for all relays.
Scoring	Full ring (integer) scoring.

CamScanner

Qualification procedure Preparation Time, Sighting time. Course of fire Subsequent Relays	Athletes will be called to the line thirteen (13) minutes before the scheduled Start time for each relay. All athlete checks by the Range Officers must be completed before the start of Preparation time. Three (3) minutes Preparation time in both stages, followed by one (1) sighting series in 8 seconds in each stage. Thirty (30) shots in each stage. Each stage consists 2 series of five shots in 8s, 2 series of five shots in 6s and 2 series of five shots in 4s. (Only one shot is fired at each target in each series) For each stage all athletes must complete the first stage before the second stage may begin. If there is more than one Qualification relay, there must be a fifteen (15) minute break before athletes on subsequent relays are called to the line to allow athletes to remove their equipment and for the RTS Jury to check the targets and reface if necessary.
Number of athletes to qualify. Tied Scores	The top six (6) athletes in the Qualification stage will progress to the Final. Tied scores between any athletes will be decided by ISSF Tiebreak Rule 6.15.1

6.11.9.7 **25m Pistol Women / 25m CENTREFIRE PISTOL**

Type of event	Individual
Name of events	25m Pistol Women 25m Pistol Women Junior 25m Pistol Junior Men 25m Centrefire Pistol Men
Number of stages	Two stages (Precision Stage, Rapid stage)
Number of relays	One or more dependent on the number of entries.
Ranges	A 25m outdoor range should be used for all relays.
Targets	Electronic Scoring Targets for all relays.
Scoring	Full ring (integer) scoring.

CamScanner

Qualification procedure Preparation Time, Sighting time. Course of fire Subsequent Relays	Athletes will be called to the line thirteen (13) minutes before the scheduled Start time for each relay. All athlete checks by the Range Officers must be completed before the start of Preparation and Sighting time. Three (3) minutes Preparation time in both Precision and Rapid stages. One (1) sighting series of five (5) shots in each stage. Thirty (30) shots precision stage and thirty (30) shots rapid stage. For each stage all athletes must complete the first stage before the second stage may begin. If there is more than one Qualification relay, there must be a fifteen (15) minute break before athletes on subsequent relays are called to the line to allow athletes to remove their equipment and for the RTS Jury to check the targets and reface if necessary.
Number of athletes to qualify. Tied Scores	The top eight (8) athletes in the Qualification stage will progress to the Final. (25m Pistol Women, 25m Pistol Women Junior) Tied scores between any athletes will be decided by ISSF Tiebreak Rule 6.15.1

6.11.9.8 **50m Pistol**

Type of event	Individual
Format of events Ranking	The events consist of one relay except where the range capacity is insufficient for the number of entries. There will be no Final. The medals will be decided according to the ranking after the Qualification stage.
Name of events	50m Pistol Men 50m Pistol Junior Men
Number of relays	One or more dependent on the number of entries.
Ranges	A 50m outdoor range should be used for all relays.
Targets	Electronic Scoring Targets for all relays.
Scoring	Full ring (integer) scoring with inner 10's.
Qualification/ Elimination procedure Preparation and Sighting time. Course of fire Number of relays	Athletes will be called to the line twenty-five (25) minutes before the scheduled Start time for each relay. All athlete checks by the Range Officers must be completed before the start of Preparation and Sighting time. Fifteen (15) minutes to fire an unlimited number of sighting shots. Sixty (60) Match shots to be fired in one (1) hour thirty (30) minutes. If the number of entries exceeds the number of targets available on the range, two or more Elimination relays will be necessary.

CamScanner

Elimination Procedure Start lists. Subsequent relays	The allocation of athletes to targets will be according to the published Start lists for each relay. The start lists for Elimination relays will be produced according to ISSF rule 6.6.6.1 When there is more than one Elimination relay there must be a thirty (30) minute break before athletes on subsequent relays are called to the line to allow athletes to remove their equipment and for the RTS Jury to service the targets.
Number of athletes to qualify.	Qualification must consist of a proportionate number of the highest ranking athletes from each of the Elimination relays, taking the total number of entries into account. The number of athletes from each relay who will qualify should be announced as soon as possible. The maximum number of athletes progressing from Elimination to Qualification is dependent on the number of firing points available at the venue.
Tied Scores	Tied scores between athletes will be decided by ISSF Tiebreak Rule 6.15.1

6.11.9.9 **25m Standard Pistol**

Type of event	Individual
Name of events	25m Standard Pistol Men 25m Standard Pistol Junior Men
Number of stages	Three stages
Number of relays	One or more dependent on the number of entries.
Ranges	A 25m outdoor range should be used for all relays.
Targets	Electronic Scoring Targets for all relays.
Scoring	Full ring (integer) scoring.
Qualification procedure Preparation Time, Sighting time. Course of fire Subsequent Relays	Athletes will be called to the line thirteen (13) minutes before the scheduled Start time for each relay. All athlete checks by the Range Officers must be completed before the start of Preparation and Sighting time. Three (3) minutes Preparation One (1) sighting series of five (5) shots in 150 seconds. Twenty (20) shots in each stage. (60 shots total) First stage consists 4 series of five shots in 150s, Second stage consist 4 series of five shots in 20s and Third Stage consist 4 series of five shots in 10s. If there is more than one Qualification relay, there must be a fifteen (15) minute break before athletes on subsequent relays are called to the line to allow athletes to remove their equipment and for the RTS Jury to check the targets and reface if necessary.
Tied Scores	Tied scores between athletes will be decided by ISSF Tiebreak Rule 6.15.1

CamScanner

6.11.9.10 **Shotgun Trap and Skeet Qualification rules are in section 9.8 and 9.10**

6.11.10 **TEAM EVENTS**

6.11.10.1 **GENERAL**

6.11.10.2 Team:

Three athletes from same Nation and same gender.

6.11.10.3 All Team events consist of Qualification part only. There are no finals.

6.11.10.4 Electronic Scoring Targets must be used for all stages.

6.11.10.5 The score of the team is the combined scores of the three team athletes from Elimination/Qualification stage of individual event.

6.11.10.6 All athletes must be in competition. RPO Athletes cannot be part of the team.

6.11.10.7 If event has Elimination stage, the team score is from Elimination stage of competition.

6.11.10.8 Tied scores for progression to the next stage will be decided according to ISSF general Technical Rules.

6.11.10.9 ISSF General Technical Rules will apply to matters not mentioned in these rules.

6.11.10.10 The Jury will decide irregular or disputed matters according to General Technical Rules for each event.

6.11.10.11 Any penalties will be applied according to ISSF rules

6.12 RULES OF CONDUCT FOR ATHLETES AND OFFICIALS

6.12.1 **No type of demonstration or political, religious or racial propaganda is permitted during ISSF Championships.**

6.12.2 **Each team must have a team leader who is responsible for maintaining discipline within the team. An athlete may be appointed as a team leader. The team leader must cooperate with competition officials at all times in the interest of safety, the efficient conduct of the competition and good sportsmanship.**

6.12.3 **The Team Leader is responsible for:**

a) Completing the necessary entries with accurate information and submitting them to appropriate officials within designated time limits;

b) Being familiar with the programme;

c) Having team members report, ready to shoot, at designated firing points, at the correct times, with approved equipment;

d) Checking scores and filing protests, if necessary;

e) Observing preliminary and official bulletins, scores and announcements;

f) Receiving official information and informing team members; and

g) Representing the team at all official activities.

6.12.4 **The Athlete is responsible for:**

a) Reporting to his firing point, ready to shoot, at the correct time, with equipment that complies with these rules;

CamScanner

b) Taking his firing position on his designated firing point so that he does not disturb adjacent athletes; and

c) Conducting himself so that he does not disturb or adversely affect the performances of other athletes. If, in the opinion of the Jury, an athlete's behaviour or actions disturbs other athletes, the athlete may be given a warning, penalty or disqualification, depending upon the circumstances.

6.12.5 **Coaching During Any Event**

6.12.5.1 In all events, non-verbal coaching is allowed, the written word is non-verbal. In 50m Three-Position Finals, verbal coaching is allowed only during changeover times. While on the firing line, an athlete may speak only with Jury Members or range officials. Coaching during training is permitted, but such coaching must not disturb other athletes.

6.12.5.2 If an athlete wishes to speak with his Coach or Team Official during an Elimination or Qualification, the athlete must unload his gun and leave it in a safe condition on the firing line with the action open and a safety flag inserted. An athlete may leave the firing line only after notifying a Range Officer and without disturbing other athletes.

6.12.5.3 If a coach or team official wishes to speak with a team member on the firing line, the team official must not contact the athlete directly or talk with the athlete while he is on the firing line. The team official must obtain permission from a Range Officer or Jury Member, who will call the athlete from the firing line.

6.12.5.4 If a team official or athlete violates the rules concerning coaching, a warning must be issued the first time. In repeated cases, two (2) points must be deducted from the athlete's score and the team official must leave the vicinity of the firing line.

6.12.6 **Penalties for Rule Violations**

6.12.6.1 **Deciding Open and Concealed Violations**

The Jury must decide violations according to these standards:

a) In the case of an **open violation** of the Rules, a **Warning (Yellow Card)** must first be given so the athlete may have an opportunity to correct the fault. Whenever possible, the warning should be given during training or the Preparation and Sighting Time. If the athlete does not correct the fault as instructed by the Jury, two (2) points must be deducted from his score. If the athlete still does not correct the fault after receiving a **Deduction (Green Card)**, **Disqualification (Red Card) (DSQ)** must be imposed; or

b) In the case of a **concealed violation** of the Rules, when the fault is deliberately concealed, **Disqualification (Red Card) (DSQ)** must be imposed; or

c) If, when asked to give an explanation for an incident, an athlete consciously and knowingly gives **false information**, two (2) points must be deducted or in serious cases, disqualification may be imposed.

6.12.6.2 In cases of a violation of ISSF Rules or the instructions of Range Officers or Jury, the following penalties may be imposed on the athlete by a Jury Member or the Jury. Penalties for Rule violations in Shotgun events will be decided by the Jury, the Chief of Referees and the Referee, in accordance with Rule 9.16.

CamScanner

a) **Warning (Yellow Card)**. A warning must be expressed in terms that will leave no doubt that it is a **Warning** and the yellow card must be shown. However, it is not necessary to precede other penalties with a warning. The warnings must be recorded on a Range Incident Report and noted on the Range Register. A warning may be given by an individual Jury Member. Any warning given must be carried forward for any further violation.

b) **Deduction (Green Card).** A deduction of points from the score may be given by an individual Jury Member by showing a **Green Card** with the word **"Deduction."** In most cases, a deduction of two (2) points will apply, but exceptions are shown in the relevant Rule, e.g., for late shots or dry firing in Finals. Deductions must be recorded on a Range Incident Report Form, marked on the printer strip, noted on the Range Register and immediately reported to the RTS Jury. Deductions do not necessarily need to be preceded by a Warning.

c) **Disqualification (Red Card) (DSQ)**. An athlete must be disqualified (DSQ) for failure to pass a post-competition check (6.7.9.1) or for a violation of Shotgun Rule 9.4.1.1 or 9.4.3.2.d. Disqualification for any other reason may only be given by the decision of a majority of the Jury. The disqualification of an athlete is expressed by the Jury by showing a **Red Card** with the word **"Disqualification."** If an athlete is disqualified during any phase of an event (Elimination, Qualification or Final), the results for that athlete for all phases of that event must be deleted and the athlete must be listed at the end of the results list with an explanation regarding why the athlete was disqualified.

d) **Unsportsmanlike Behaviour (DQB).** If an athlete is disqualified for a serious safety violation or for the physical abuse of a competition official or another athlete (Rule 6.12.6.4) as decided by a majority of the Jury, all results for that athlete for all events in the Championship must be deleted and the explanation(s) must indicate DQB.

e) Anti-Doping Violation (AD-DSQ). If an athlete is disqualified for an anti-doping violation, all results for that athlete for all events in the Championship must be deleted and the explanation(s) must indicate AD-DSQ.

f) Penalties should be expressed both with a verbal explanation and with the display of yellow, green or red cards. The size of penalty cards should be approximately 70mm x 100mm.

g) A team, of which a member has been disqualified, must not be ranked and must be shown in the result list with the remark "DSQ."

h) When there is a penalty or disqualification, a Jury Member must provide or approve remarks for the Results Lists to explain the penalty or disqualification.

6.12.6.3 **Serious Safety Violations**

a) If the Jury determines that an athlete has handled a gun or violated a safety rule in a **dangerous manner**, the athlete must be disqualified (DSQ) (see 6.2.2).

6.12.6.4 **Physical Abuse of a Competition Official or Athlete**

An athlete or team official who makes physical contact with a Jury Member, Referee, Range Officer, other competition official or another athlete by grasping, pushing, shoving, striking or similar means may be excluded from further participation in a Championship. Any such act of physical abuse must be reported to the Chairman of the Jury responsible for supervising that area of activity. One or more witnesses or physical evidence must confirm the act of

CamScanner

alleged abuse. The Jury must then decide whether the athlete or team official may be excluded from that Championship. A decision to exclude may be appealed to the Jury of Appeal (6.16.6). If the Jury or Jury of Appeal concludes that the act of abuse was of such a serious nature that further sanctions are warranted, they may, in addition to excluding the athlete or team official from the current championship also refer the case to the ISSF Ethics Committee (3.12.3.5, Annex "CE") for further consideration.

6.13 MALFUNCTIONS

6.13.1 A malfunction occurs when a gun fails to fire a projectile when the trigger is pulled.

6.13.2 Malfunctions may be either ALLOWABLE or NON-ALLOWABLE.

6.13.2.1 **Allowable Malfunctions are:**

a) A cartridge fails to fire;

b) A bullet or pellet is lodged in the barrel; or

c) The gun fails to fire or function properly and the trigger mechanism has been released.

6.13.2.2 **Non-Allowable Malfunctions are:**

a) The athlete has opened the action of his gun;

b) The safety was engaged;

c) The athlete did not properly load his gun;

d) The athlete did not pull the trigger; or

e) The malfunction is due to any cause that could reasonably have been corrected by the athlete.

f) When electronic trigger is used, the battery fails.

6.13.3 If an athlete has a gun or ammunition malfunction, he may repair it and continue shooting or, if the malfunction was an ALLOWABLE malfunction, he may continue shooting with another gun of the same type and calibre that complies with these Rules. The replacement gun will be subject to targeted testing.

6.13.4 No extra competition time is allowed to repair or replace a gun after any malfunction in 10m, 50m and 300m Rifle or Pistol Elimination or Qualification Rounds, but the Jury may allow an athlete to fire additional sighting shots after repairing or replacing a malfunctioning gun if the malfunction was ALLOWABLE.

6.13.5 Specific rules concerning malfunctions in 25m Pistol events are found in Rule 8.9.3.

6.13.6 Specific rules concerning malfunctions in Finals are found in Rules 6.17.1.6, 6.17.4.m and 6.17.5.l.

6.13.7 Range Officers or Jury Members must ensure that malfunctions are documented on Range Incident Reports or Malfunction Score Computation Forms and in the Range Register.

CamScanner

6.14 SCORING AND RESULTS PROCEDURES

6.14.1 The RTS Office must publish Preliminary Results on the Range Scoreboard as soon as possible after each relay and stage and completion of each event.

6.14.2 Official Final Results must be published on the Main Scoreboard after the Protest Time has expired.

6.14.3 **Results Distribution:** The organizer must provide for the distribution of Preliminary and Official Final Results to all match officials, participating teams and media. This may be done by distributing paper or electronic (see 6.6.5 b, Sustainability Option) Results Lists.

6.14.4 After each ISSF Championship, ISSF Headquarters will produce an electronic (on-line) Official Results Book. The Official Results Book for each Championship must contain:

a) A table of contents;

b) A Results Certification Page to be signed by the Technical Delegate(s) and all Jury Chairmen;

c) A list of Competition Officials;

d) A list of Entries by Nation and by event;

e) The Competition Schedule;

f) A list of Medallists by name;

g) A list of Medals by Nation by number;

h) A list of New and Equalled Records; and

i) All final results in the standard ISSF order of events as follows: 1) Men‘s 10m, 50m and 300m rifle events; 2) Men‘s 10m, 25m and 50m pistol events; 3) Men‘s Trap, Skeet and Double Trap events; 4) Men‘s 10m and 50m Running Target events; 5) Men’s Team Events; 6) Women‘s 10m, 50m and 300m Rifle events; 7) Women‘s 10m and 25m Pistol events; 8) Women’s Trap, Skeet and Double Trap events; and 9) Women‘s 10m Running Target Events; 10) Women’s Team Events; 11) Mixed Team 10m, 25m, 50m, 300m, Trap and Skeet.

6.14.4.1 These lists must contain the full names as used in the ISSF ID Numbers: Family name (in capital letters), full given name (first letter only capitalized), Bib Numbers and the Nation (official IOC abbreviation) of each athlete.

6.14.4.2 The following abbreviations must be used in results lists when appropriate:

DNF	Did not Finish
DNS	Did not Start
DSQ	Disqualified
DQB	Disqualification for Unsportsmanlike Behaviour
WR	New World Record
QWR	New Qualification World Record
EWR	Equalled World Record
EQWR	Equalled Qualification World Record

CamScanner

WRJ	New World Record Junior
QWRJ	New Qualification World Record Junior
EWRJ	Equalled World Record Junior
EQWRJ	Equalled Qualification World Record Junior
OR	New Olympic Record
EOR	Equalled Olympic Record
QOR	Qualification Olympic Record
EQOR	Equalled Qualification Olympic Record
MQS	Minimum Qualifying Score
RPO	Ranking Points Only
OOC	Out of Competition

6.14.5 The Official Final Results must be verified and signed by a Member of the RTS Jury to confirm its accuracy.

6.14.6 All irregularities, penalties, misses, malfunctions, extra time allowed, repeated shots/series or the annulment of shots, etc., must be clearly marked and recorded on a **Range Incident Report** and the Range Register, printout by a Range Officer and/or Jury Member. Copies of completed **Range Incident Reports** (Form IR) must immediately be forwarded to the scoring and results office. At the end of each competition, the RTS Jury must examine the results to confirm that all malfunction calculations and any penalties are correctly recorded in the results list.

6.14.7 Deductions from Rifle and Pistol scores must always be made in the series in which the violation occurred. If general deductions are involved, they must be made from the lowest value MATCH shot(s) in the first series of the stage where the deduction applies.

6.14.8 The RTS Jury must check the ten (10) best individual and three (3) best team results prior to approving the Final Results List. When EST are used, this check must be done by comparing scores recorded in the main computer with scores from the printout or an independent memory source (Rule 6.3.2.7) plus all manual score interventions documented by Incident Reports (IR) or malfunction forms.

6.14.9 **WORLD RECORDS**

World Records will be established in all ISSF Championships in accordance with General Regulations, Art.3.10 (see also 6.1.2.b) in all ISSF events where gold medals are awarded.

6.14.9.1 Olympic Records (OR) may only be established in the Olympic Games.

6.14.9.2 World Records Junior (WRJ) for recognized non-Olympic events will be established by using total results in those events.

6.14.9.3 Qualification World Records (QWR) and Qualification World Records Junior (QWRJ) will be established by using total results in Qualification competitions in all Olympic events.

CamScanner

6.14.9.4 When a World Record is established in an ISSF Championship, the report **Procedures for Verification of World Records** (Rule 3.12.3.6, Annex R) must be completed and forwarded to ISSF Headquarters by the Technical Delegate.

6.15 TIE-BREAKING

6.15.1 Individual Ties in 10m, 25m, 50m and 300m Events

All tied scores will be broken for 10m, 25m, 50m, and 300m events by applying the following Rules:

a) The highest number of inner tens;

b) The highest score of the last ten (10) shot series working backward by 10-shot series in full ring scoring (not inner tens or decimals) until the tie is broken;

c) If any ties remain, scores will be compared on a shot-by-shot basis using inner tens (i.e. an inner ten outranks a 10 that is not an inner ten) beginning with the last shot, then the next to the last shot, etc.;

d) If any ties remain, and EST are used, scores will be compared on a shot-by-shot basis using decimal ring scores beginning with the last shot, then the next to the last shot, etc.;

e) If any ties remain, the athletes must have the same ranking and must be listed in Latin alphabetical order using the athlete's family name;

f) **When decimal scoring is used** for 10m Air Rifle or 50m Rifle Prone Elimination or Qualification events, ties will be broken by the highest score of the last ten shot series, etc. (decimal scores) and then by comparing decimal scores on a shot-by-shot basis beginning with the last shot, then the next to the last shot, etc.

6.15.2 Ties in Shotgun Events (see Shotgun Rule 9.15)

6.15.3 Ties in Running Target Events (see Running Target Rule 10.12)

6.15.4 Ties in Olympic Events with Finals

If there is a tie to be eligible for Rifle or Pistol Finals from the Qualification, the tie will be broken by Rule 6.15.1. If there is a tie to be eligible for Shotgun Finals from the Qualification, the tie will be broken by Rule 9.15.1.

6.15.5 Ties in Team Events

Ties in team events, including ties in the Qualification stage of Mixed Team events, must be decided by totalling the results of all members of a team and following the procedures for breaking individual ties.

6.16 PROTESTS AND APPEALS

6.16.1 All Protests and Appeals are to be decided in accordance with ISSF Rules.

6.16.2 Verbal Protests

6.16.2.1 Any athlete or team official has the right to protest a condition of the competition, decision or action of a competition official immediately and verbally to a Referee, Range Officer or Jury Member on the following matters:

CamScanner

a) An athlete or team official considers that the ISSF Rules or the competition programme were not followed in conducting the competition;

b) An athlete or team official does not agree with a decision or action by a competition official, Referee, Range Officer or Jury Member;

c) An athlete was impeded or disturbed by other athlete(s), competition official(s), spectator(s), member(s) of the media or other person(s) or cause(s);

d) An athlete had a long interruption in shooting caused by range equipment failure, the clarification of irregularities or other cause(s); and

e) An athlete had irregularities regarding shooting times, including shooting times that were too short.

6.16.2.2 Referees, Range Officers and Jury Members must consider verbal protests immediately. They may take immediate action to correct the situation or refer the protest to the full Jury for a decision. In such cases, a Referee, Range Officer or Jury Member may stop the shooting temporarily if necessary.

6.16.3 **Written Protests**

Any athlete or team official who does **not agree** with the action or decision taken on a **verbal protest** may protest in writing to the Jury. Any athlete or team official also has the right to submit a **written protest** without making a verbal protest. All written protests must be submitted to a member of the appropriate Jury not later than 20 minutes (10 minutes for Shotgun) after the matter in question and the protest fee becomes payable. Written Protests and Appeals must be submitted on the ***ISSF Protest Form*** (see Protest Form at 6.19).

6.16.4 **A Protest Fee becomes payable when a written Protest or Appeal is submitted to a Jury member, as follows:**

a) Protest: 50,00 EUR;

b) Appeal of Protest Decision: 100,00 EUR;

c) The Protest Fee becomes payable when a completed Protest Form is delivered to a Jury Member and must be paid to the Jury Member or Organizing Committee as soon as possible; and

d) Protest fees must be returned if the Protest or Appeal is upheld, or will be retained by the Organizing Committee if the Protest or Appeal is denied.

6.16.5 **Scoring Protests**

Decisions by the RTS Jury on the value or number of shots on a target are final and may not be appealed.

6.16.5.1 **Scoring Protest Time**

All scoring or results protests must be submitted within **10 minutes** after Preliminary Results are posted on the Range Scoreboard (Rule 6.4.2.i). The time when the Scoring Protest Time ends must be shown on the Range Scoreboard, when Preliminary Results are posted. The location to which any score protest must be made must be published in the Official Programme.

6.16.5.2 **EST Score Protests**

If an athlete **protests the value of an indicated shot** on an EST, the protest will only be accepted when it is made before the next shot or series (25m events) is fired or within three (3) minutes after the last shot, however, this

CamScanner

requirement does not apply in case of a failure of the paper or rubber band to advance or other target failures.

a) If a protest is made concerning the value of a shot, the athlete will be requested to fire another shot at the end of the competition, so that this extra shot may be counted if the protest is upheld and the correct value of the disputed shot cannot be determined;

b) If the RTS Jury determines that a protested shot scores within two (2) decimal rings of the value of an indicated shot, the protest must not be upheld;

c) If the protest concerning a shot value, other than zero (0) or failure to register, is not upheld, a two (2) point penalty from the score of the disputed shot will be awarded and the protest fee must be paid;

d) The team official or athlete has the right to know the resolution of the disputed shot; and

e) Shots on 50m EST with an indicated value of 9.5 or higher may not be protested in Elimination or Qualification Rounds; and

f) Score protests regarding the value or number of shots are not permitted in Finals (Rule 6.17.1.7).

6.16.6 **Appeals**

If there is a disagreement with a Jury decision, the matter may be appealed to the Jury of Appeal, except that decisions by a Finals Protest Jury (6.17.1.10 d) and decisions by the RTS Jury on the value or number of shots (6.16.5) are final and may not be appealed. Such appeals must be submitted in writing by the team leader or a representative not later than 30 minutes after the Jury decision has been announced. **The decision of the Jury of Appeal is final**.

6.16.7 **Copies of all decisions** regarding written protests and appeals must be forwarded by the Technical Delegate(s) to the ISSF Secretary General together with his Final Report for review by the appropriate Section and Technical Committees.

6.17 FINALS IN OLYMPIC RIFLE AND PISTOL EVENTS

6.17.1 General Finals Competition Procedures. These procedures apply to Finals in all 10m, 25m and 50m Rifle and Pistol Individual events.

Procedures applicable to specific events are shown as follows:

Rule 6.17.2 - 10m Air Rifle and 10m Air Pistol, Men and Women

Rule 6.17.3 - 50m Rifle 3-Positions Men and Women

Rule 6.17.4 - 25m Rapid-Fire Pistol Men

Rule 6.17.5 - 25m Pistol Women

Rule 6.18 – 10m Rifle and Pistol Mixed Team events

Separate procedures apply to Shotgun events, as shown in Section 6.19

6.17.1.1 **Qualification for Finals**. All athletes entered in an event will fire the Qualification course (Rule 3.3.5 and 3.3.6.5) to determine the finalists for that event. The eight (8) highest-ranking athletes in the Qualification advance to the Finals, except in 25m Rapid Fire Pistol Men, the six (6) highest-ranking athletes advance.

CamScanner

6.17.1.2 **Start Positions**. Start positions in Finals are assigned according to a random draw that is done automatically by the computer when the Finals Start List is produced. 10m and 50m firing points must be labelled R1-A-B-C-D-E-F-G-H-R2. Targets for 25m Pistol Women Finals must be labelled A-B-R1-D-E/F-G-R2-I-J. The reserve targets are designated R1 and R2.

6.17.1.3 **Reporting and Start Times.** The Start Time for a Final is when the CRO begins the commands for the first MATCH shot/series. Athletes must report to the Finals Range Preparation Area at least 30 minutes before the Start Time. A two (2) point/hit penalty will be deducted from the score of the first MATCH shot/series if the athlete does not report on time. Athletes must report with their equipment including sufficient ammunition to complete the Final, competition clothing and a national team uniform that is appropriate to wear in the Victory Ceremony. The Jury must confirm that all finalists are present and that their names and nations are correctly recorded in the results system and on the scoreboards. Juries must complete equipment checks during the reporting period as soon as possible after the athlete reports. During Finals security measures should be put in place to ensure the security of all equipment and athletes belongings left within the Preparation area.

6.17.1.4 **Late Arrival**. Any finalist who does not report to the preparation area within 10 min. after the Reporting Time may not start and will be recorded as the first eliminated athlete and shown as DNS. If a finalist does not report, the first elimination will begin with the seventh place, or fifth place for a 25m Rapid Fire Pistol Men Finals.

6.17.1.5 **Scoring**. Qualification scores entitle an athlete to a place in a Final, but do not carry forward. Scoring in Finals starts from zero (0) in accordance with these rules. A deduction or penalty must be applied to the score of the MATCH shot/series where the violation occurred. No score below zero (0) will be recorded (e.g. 3-1 point deduction = 2, 0-1 point deduction = 0).

6.17.1.6 **Malfunctions, 10m and 50m Finals.** If a finalist has an ALLOWABLE malfunction (Rule 6.13.2) during a single shot, a maximum of one (1) min. will be given to repair the malfunction or replace the gun, after which the athlete will be directed to repeat the shot. If a finalist has an ALLOWABLE malfunction in a 5-shot series and the malfunction can be repaired or the gun replaced within one (1) min., any shots fired in that series will be counted and the athlete will be permitted to complete the series within the time remaining when the malfunction was claimed plus additional time equal to the time required to repair the malfunction, but not exceeding one (1) min. Finalists may have only one ALLOWABLE MALFUNCTION per Final.

6.17.1.7 **Score Protests.** Score protests regarding the value or number of shots are not permitted in Finals.

6.17.1.8 **EST Complaints During Finals**

a) If a finalist complains that his target failed to register a shot during Sighting shots, the athlete must be directed to fire another shot at that target. If that shot registers, the Final will continue. If that shot does not register or if there is a complaint regarding the failure of a paper/rubber strip to advance, the CRO must command “STOP…UNLOAD” for all finalists and the athlete with the malfunctioning target must be moved to a reserve target. As soon as that athlete is in position on a spare target, the CRO will give all finalists two (2) minutes preparation time and then restart the Preparation and Sighting Time for the Final.

CamScanner

b) If there is a complaint concerning an unexpected zero (0) (missing shot) during a MATCH shot/series, the Jury (Jury Member-in-Charge, second Competition Jury Member and one RTS) must determine whether the missing shot actually was a miss (0) or if the target malfunctioned (the Jury may direct the CRO to stop firing so they can examine the target). Unless the Jury finds credible evidence that the shot missed the target, it shall direct the athlete to fire another competition shot (10m/50m), 25m Pistol Women series completion (one shot) or a 25m Rapid Fire Men series. If the extra competition shot registers, the value of that shot shall be counted in lieu of the unexpected zero (missing shot) and the Final shall continue. In a 25m Rapid Fire Men Final, the score of the repeat series shall count in lieu of the hit total of the original series.

c) If the shot fired on a target that had the unexplained miss does not register, the athlete must be moved to a reserve target (25m RFP to another target group). In 10m or 50m Finals, the athlete who was moved to a reserve target must be given two (2) minutes Preparation and Sighting Time. The athlete who is moved must, on command, be allowed to fire the missing competition shot, series completion or refire series (25m RFP) before competition firing continues for all athletes.

d) During any delay in competition firing, other finalists are permitted to do aiming exercises and dry fire. If the total delay to resolve the unexplained miss issue is longer than five (5) minutes, all athletes in 10m and 50m Finals must be given two (2) minutes Sighting time before competition firing resumes.

6.17.1.9 **Finals Range Equipment.** Finals Ranges must be equipped with electronic scoreboards that display ranked results for competition officials, athletes, coaches and spectators; a countdown clock visible to finalists and a speaker system. If a count-down clock is not visible to all finalists, all controlled times must be shown on monitors clearly visible to all finalists. Chairs must be provided for Jury Members on duty, Range Officers, coaches and eliminated athletes who withdraw from the firing line. A table or bench must be provided on which athletes can place their equipment before entering the Finals range or if they withdraw from the firing line.

6.17.1.10 **Finals Officials.** The conduct and supervision of Finals must be done by the following personnel:

a) CRO. An experienced Chief Range Officer with an ISSF A or B license must conduct Finals;

b) Competition Jury. The Competition Jury must supervise the conduct of Finals. The Jury Chairman must designate himself or one Jury Member as the Jury Member-in-Charge;

c) RTS Jury. One member of the RTS Jury must be present to oversee the Finals' results process;

d) Finals Protest Jury. One member of the Jury of Appeal, the Jury Member-in-Charge and one other member of the Competition Jury, as designated by the Technical Delegate and Jury Chairman, shall act as the Finals Protest Jury and must decide protests if any are made during a Final; no appeals against Finals Protest Jury decisions are permitted;

e) Range Officer (RO). One or two experienced Range Officer(s) will assist the CRO by checking guns for safety, escorting finalists and their coaches to and from the FOP and handling any malfunction claims during the Final;

CamScanner

f) Technical Officer(s). The Official Results Provider appoints the Technical Officer(s) to prepare and operate the ESTs and the graphic display of results and to consult with the Juries regarding any technical problems;

g) Announcer. An official designated by the ISSF or Organizing Committee must work with the CRO and be responsible for introducing finalists, announcing scores and providing information to spectators; and

h) Sound Technician. A qualified technical official must be available to operate the sound and music system during the Final.

6.17.1.11 **Finals Production and Music.** The conduct of Finals must use colour, lighting, music, announcements, commentary, staging and CRO commands in a complete production that portrays the athletes and their competitive performances in the most appealing and exciting ways to spectator and television audiences.

6.17.1.12 **Presentation of Finalists.** After the Sighting Period or Series, Rifle finalists may remain in position, but must lower their rifles from their shoulders and turn their heads towards spectators and the TV camera. All Pistol finalists must place their guns down and turn to face the audience. The Announcer will introduce finalists by giving the name, nation and brief information about each Finalist. The Announcer must also introduce the CRO and Jury Member-in-Charge.

6.17.1.13 **Protests in Finals**

a) Any protests in a Final must be verbal and immediate. Protests are made by the athlete or his coach holding up his hand;

b) There is no protest fee for a protest in a Final.

c) Any protest must be decided immediately by the Finals Protest Jury

(3.12.3.7, 6.16.6 and 6.17.1.10.d.). A decision by the Finals Protest Jury is final and may not be appealed; and

d) If a protest in a Final is not upheld, a penalty of two points or two hits must be deducted from the score of the last shot or series.

6.17.1.14 **Finals Rules and Procedures.**

a) ISSF General Technical Rules or the Technical Rules for each event apply in all cases not covered by Rule 6.17.

b) **Reporting and equipment set-up.** After reporting to the Preparation Area, finalists or their coaches must be allowed to place their guns and equipment on their firing points at least 20:00 min. before the Final start time (15:00 min. before for 25m Pistol Finals). Gun cases and equipment containers must not be left on the FOP. Aiming exercises are not permitted at this time. Athletes must then return to the Preparation Area, ready to be called to the firing line for their warm-up period and presentation. Coaches will take their allocated seats on the field of play.

c) **Call to the line.** An NTO will direct athletes to line up close to the Finals Range twelve (12) minutes before the published START time. When Rifle finalists are called from the Preparation Area to the firing line, they must walk to the line fully dressed with trousers and jackets closed. The CRO will announce **"ATHLETES TO THE LINE".**

CamScanner

d) **Safety flags.** After finalists are called to the line, they may handle their guns, get into firing positions and do holding or aiming exercises but they may not remove safety flags or dry fire until the **"PREPARATION AND SIGHTING TIME…START"** command or **"PREPARATION BEGINS NOW"** (25m Pistol) command.

e) **Dry firing.** In Finals, dry firing is permitted only during a Preparation and Sighting Time, Changeover and Sighting Times or a Preparation Period, except that dry firing during 25m Rapid Fire Pistol Finals is permitted in accordance with 6.17.4. Dry firing, at any other time must be penalized with a one (1) point deduction in 10m and 50m Finals and a one (1) hit deduction in 25m Pistol Finals.

f) **Early loading.** No finalist is permitted to load a rifle or pistol until the CRO gives the command "**LOAD**" or „**START**". This means that for the Preparation and Sighting Time, where there is no "**LOAD**" command, **"START"** is also an authorization to load. Loading is defined as bringing a cartridge or pellet or magazine with cartridges into contact with the gun (see 6.2.3.4).

g) **Holding and aiming exercises.** In Finals, holding and aiming exercises are permitted from the time finalists are called to the line (**"ATHLETES TO THE LINE"** command) until the **"STOP… UNLOAD"** command at the end of the Final is given, except that holding and aiming exercises may not be done during the presentations.

h) **Firing before START or LOAD command.** If a finalist in a 10m, 25m or 50m Final loads and fires a shot before the **"PREPARATION AND SIGHTING TIME…START"** command or before the **"FOR THE SIGHTING SERIES… LOAD"** command, he must be disqualified.

i) **Firing after STOP command.** If a finalist fires a shot after the **"PREPARATION AND SIGHTING TIME… STOP"** command or the **"CHANGE-OVER AND SIGHTING TIME…STOP"** command and before the **"START"** command for the next competition series, the shot must not be counted as a MATCH shot and a two (2) point penalty must be applied to the first MATCH shot.

j) **25m Pistol – early firing.** If a finalist in a 25m Rapid Fire Pistol Men Final fires a shot before the green light for a series comes on, the entire series must be scored as zero (0) hits. If a finalist in a 25m Pistol Women Final fires a shot before the green light for a shot comes on, that shot will be scored as a miss and a one (1) hit penalty will be deducted from the score of the series.

k) **Firing extra shot.** If a finalist fires an extra shot in a series or single shot time, the extra shot must be nullified and a two (2) point/hit penalty must be applied to the last correct shot/series.

l) **Firing inadvertently.** If a finalist who is not involved in a shoot-off or malfunction completion/refire loads and fires a shot that shot must be nullified. There is no penalty for this inadvertent mistake.

m) **Safety flags** - must remain inserted in finalists' guns until the Preparation and Sighting Time starts. Safety flags must be inserted during the presentation and when an athlete is eliminated or the Final concludes. Athletes who are eliminated during a Final must place their guns down on the firing point, bench or equipment box (3-Position Finals) with actions open and muzzles pointed downrange, with safety flags inserted. A Range Officer must check all guns to make sure safety flags are inserted. Medal winners may pose with their guns immediately after the Finals, but no guns may be removed from the firing

CamScanner

points until safety flags are inserted and checked by a Range Officer. If an athlete inadvertently fails to insert a safety flag, a Range Officer is authorized to correct the fault and insert a safety flag.

n) **Coaching.** Non-verbal coaching is permitted during all Finals. Verbal coaching is permitted only during 3-Position Rifle Final changeover times.

o) **Incorrect commands**. If a Finals CRO in either an individual or mixed team Final gives an incorrect command, such as failing to start a relay correctly or calling **STOP** before all athletes have fired or completed firing, the following procedure must take place:

If a Finals CRO in either an individual or mixed team Final gives an incorrect command during a single series, **shots already fired must be counted.** The CRO must reset the time clock to the original time limit and give new commands to allow the athlete(s) who did not start or were unable to complete firing, to fire their remaining shots.

If a Finals CRO in either an individual or mixed team Final gives an incorrect command during a multi-shot individual or mixed team series, **shots already fired must be counted.**

The Jury-Member-in-Charge must determine how much time was remaining at the time **STOP** was commanded, add 60 seconds to that time and instruct the CRO to restart and complete the series so athletes who have shots remaining can fire.

If any athlete misunderstands this procedure and accidentally fires too many shots, any extra shots must be nullified and incur no penalties.

p) **Presentation of Medallists.** After the CRO declares **"RESULTS ARE FINAL,"** the Jury Member in Charge must assemble the three medallists on the FOP and the Announcer must recognize the medal winners by announcing:

"THE BRONZE MEDAL WINNER, REPRESENTING (NATION), IS (NAME)"

"THE SILVER MEDAL WINNER, REPRESENTING (NATION), IS (NAME)"

"AND THE GOLD MEDAL WINNER, REPRESENTING (NATION), IS (NAME)"

q) Malfunctions. Only one (1) malfunction will be allowed for each athlete throughout the Final. Athletes may be allowed one (1) minute to repair or replace a malfunctioning firearm to permit the Final to continue without unnecessary delay.

r) Music. During the Final, music must be played which should be approved by The Technical Delegate. Enthusiastic audience support is encouraged and recommended during all Final stages.

s) Penalties. Any penalties will be applied according to ISSF rules.

t) Irregular cases. ISSF General Technical Rules will apply to matters not mentioned in the above paragraphs. The Jury will decide irregular or disputed matters according to General Technical Rules for each event.

u) National identification (dress code). Athletes must wear shooting clothes consistent with the ISSF Dress Code, (Rule 6.22). Rifle athletes must display their national identification on their shooting jackets as follows: The national flag of the country, or the 3-letter identifier as determined by the IOC on the pocket that faces towards the audience or on the lower back of the jacket.

CamScanner

6.17.2 FINALS – 10m AIR RIFLE AND 10m AIR PISTOL, MEN AND WOMEN

NOTE: Timings in this rule are provided as guidelines. For detailed timings for the conduct of Finals, check the "Commands and Announcements for Finals" documents that are available from ISSF Headquarters.

a) **FINALS FORMAT**	The Final consists of two (2) series of five (5) MATCH shots each fired in a time of 250 sec. per series (5 + 5 shots). This is followed by fourteen (14) single MATCH shots each fired on command in a time of 50 sec.. Eliminations of the lowest scoring finalists begin after the 12th shot and continue after every two shots until the gold and silver medals are decided. There are a total of twenty-four (24) shots in the Final.
b) **SCORING**	Scoring in Finals is done with tenth-ring (decimal) scoring. Cumulative total scores in a Final determine final rankings, with ties broken according to shoot-off scores. Deductions for violations occurring before the first MATCH shot will be applied to the score of the first MATCH shot. Deductions for other penalties will be applied to the score of the shot where the violation occurred.
c) **EQUIPMENT SET-UP TIME** **20:00 min before**	Finalists or their coaches must be allowed to place guns and equipment on their firing points not less than 20 min. before the Start Time.
d) **WARM-UP PERIOD** **13:00 min before**	The CRO will call finalists to the firing line thirteen (13) minutes before the start time by commanding **"ATHLETES TO THE LINE."** After two (2) min., the CRO will start a combined Preparation and Sighting Time by commanding **"FIVE (5) MINUTES PREPARATION AND SIGHTING TIME…START."** During this time, finalists may fire unlimited sighting shots. At 30 sec. before the end of the Preparation and Sighting Time, the CRO will command **"30 SECONDS."** After five (5) minutes, the CRO will command **"STOP…UNLOAD."** No score announcements are made during sighting shots.
e) **PRESENTATION OF FINALISTS** **5:30 min. before**	After the command **"STOP…UNLOAD,"** Rifle finalists must unload their rifles and insert safety flags. Rifle finalists may remain in position during the presentations, but they must lower their rifles from their shoulders and are expected to turn their heads and faces towards spectators and the TV camera used to show the presentations. All finalists' rifles must remain down, out of their shoulders, until the presentation of all finalists is finished. After the command **"STOP…UNLOAD,"** Pistol finalists must unload their pistols, insert safety flags, place them on the bench and turn to face spectators for the presentation. A Range Officer must verify that gun actions are open with safety flags inserted. After finalists' guns are checked, the Announcer will introduce the finalists, CRO and Jury Member-in-Charge according to Rule 6.17.1.12.
f) **FINAL PREPARATION TIME**	Immediately after the presentation, the CRO will command **"TAKE YOUR POSITIONS."** The targets and scoreboard must be cleared for MATCH shots. After 60 sec., the CRO will begin commands for the first MATCH series.

CamScanner

g) **1st COMPETITION STAGE** **2 x 5 Shots** **Time limit: 250 sec. for each series** **Competition firing starts at 0:00 min.**	The CRO will command **"FOR THE FIRST COMPETITION SERIES… LOAD."** After 5 sec., the CRO will command **"START."** Finalists have 250 sec. to fire five (5) shots. At 250 sec. or after all finalists have fired five (5) shots, the CRO will command **"STOP."** Immediately after the command **"STOP,"** the Announcer will give 15-20 sec. of comments on the current ranking of the athletes and notable scores. Individual shot scores are not announced. Immediately after the Announcer finishes, the CRO will command **"FOR THE NEXT COMPETITION SERIES, LOAD."** After 5 sec., the CRO will command **"START."** At 250 sec. or after all finalists have fired five (5) shots, the CRO will command **"STOP."** The Announcer will again comment on the athletes and their scores and explain that single shots will begin and that after each second shot, the lowest ranking finalist will be eliminated.
h) **2nd COMPETITION STAGE** **SINGLE SHOTS** **14 x 1 Shot** **Time limit: 50 sec. for each shot**	Immediately after the Announcer finishes, the CRO will command **"FOR THE NEXT COMPETITION SHOT, LOAD."** After 5 sec., the CRO will command **"START."** Finalists have 50 sec. to fire each shot. At 50 sec., or when all athletes have fired a single shot the CRO will command **"STOP"** and the Announcer will give comments about the Finalists and their scores. Immediately after the Announcer finishes, the CRO will command **"FOR THE NEXT COMPETITION SHOT, LOAD."** After 5 sec., the CRO will command **"START."** This sequence will continue until 24 total shots (two 5-shot series and 14 single shots), are fired. At the end of the 24th shot, the CRO will command **"STOP…UNLOAD."** A Range Officer must verify that gun actions are open with safety flags inserted.
i) **ELIMINATIONS**	After all Finalists have fired twelve (12) shots, the lowest ranking athlete is eliminated (8th place). The lowest ranked finalists will continue to be eliminated as follows: After 14 shots – 7th place After 16 shots – 6th place After 18 shots – 5th place After 20 shots – 4th place After 22 shots – 3rd place (bronze medal winner is decided) After 24 shots – 2nd and 1st places (silver and gold medal winners are decided)
j) **TIE-BREAKING**	If there is a tie for the lowest ranking athlete to be eliminated, the tied athletes will fire an additional tie-breaking single shot(s) until the tie is broken. For the tie-breaking shot, the CRO will immediately announce the family names of the tied athletes and command them to fire the tie-breaking shot(s) with the normal firing procedure. The Announcer will make no comments until the tie is broken.
k) **FINALS COMPLETION**	After the two (2) remaining finalists fire their 24th shots, and if there are no ties or protest, the CRO will command **"STOP…UNLOAD"** and the declare **"RESULTS ARE FINAL."** The Jury must assemble the three medallists on the FOP and the Announcer will immediately recognize the bronze, silver and gold medal winners according to 6.17.1.14 p.

CamScanner

6.17.3 FINALS – 50m RIFLE 3-POSITIONS MEN AND WOMEN

a) **FINALS FORMAT**	The Final consists of 15 MATCH shots in each position, kneeling, prone and standing, fired in that order. The Final starts with 3 x 5 shots kneeling with a time limit of 200 sec. per series. After a seven (7) min. Changeover and Sighting Time, finalists fire 3 x 5 shots prone with a time limit of 150 sec. per series. After a nine (9) min. Changeover and Sighting Time, finalists fire 2 x 5 shots standing in 250 sec. per series. The two (2) lowest ranking finalists are eliminated after 10 (2 x 5) shots standing. The Final continues with five (5) single shots in standing, each in 50 sec., with the lowest ranking athlete being eliminated after each shot until two (2) athletes remain to fire the last shot and decide the gold medal winner. There are a total of 45 shots in the Final.
RANGE EQUIPMENT	Athletes will be provided with a box in which to place all equipment required to change between the three positions, including extra ammunition. These boxes must be placed at the rear of each firing point. Before returning to the firing line after changing their equipment, athletes must place all unused equipment in their box in order to keep the firing point clear. If an athlete inadvertently leaves equipment on the firing point and adopts the next position, a Range Officer may assist by discretely placing the equipment in the box before Match firing starts. Shooting mats will be provided for each athlete to use as desired, which must be placed at the back of each firing point when the athlete takes the Standing position. A Range Officer may assist by tidying or collecting the unused mats.
b) **SCORING**	Scoring is done with tenth-ring (decimal) scoring. Cumulative total scores in the Final determine final rankings, with ties broken according to shoot-off scores. Deductions for violations occurring before the first competition shot will be applied to the score of the first competition shot. Deductions for other penalties will be applied to the score of the shot where the violation occurred.
c) **EQUIPMENT SET-UP TIME** **20:00 min before**	Athletes or athletes' coaches must be allowed to place rifles and equipment on the firing points not less than 20 min. before the Start Time. All rifle accessories and equipment needed to complete position changes must be kept in a single container that remains on the athlete's firing point during the Final.
d) **PREPARATION AND SIGHTING KNEELING POSITION** **13:00 min. before**	The CRO will call finalists to the firing line thirteen (13) minutes before the Start Time by commanding **"ATHLETES TO THE LINE."** After being called to the line, finalists may handle their rifles, get into the kneeling position and do holding or aiming exercises, but they may not remove safety flags or dry fire. After two (2) min., the CRO will start a combined Preparation and Sighting Time by commanding **"FIVE MINUTES PREPARATION AND SIGHTING TIME…START."** After this command, finalists may remove safety flags, dry fire and fire unlimited sighting shots. At 30 sec. before the end of the Preparation and Sighting Time, the CRO will command **"30 SECONDS."** After five (5) min., the CRO will command **"STOP… UNLOAD."** No score announcements are made during sighting shots. After the command **"STOP…UNLOAD,"** finalists must unload their rifles and insert safety flags for the presentation of the finalists. A Range Officer must verify that rifle actions are open with safety flags inserted. Athletes may remain in position during 3-Position Final presentations, but they must lower their rifles from their shoulders and turn their heads and faces towards spectators and the TV camera used to show the presentations.

CamScanner

e) **PRESENTATION OF FINALISTS** **5:30 min. before**	After finalists' rifles are checked, the Announcer will present the finalists, CRO and Jury Member-in-Charge according to Rule 6.17.1.12. All finalists' rifles must remain down, out of their shoulders, until the presentation of all Finalists is complete, also the introduction of the CRO and Jury Member in Charge.
f) **KNEELING POSITION MATCH FIRING** **3 x 5-shot series** **Time limit: 200 sec. for each series** **Competition firing starts at 0:00 min.**	Immediately after the presentation, the CRO will command **"TAKE YOUR POSITIONS,"** pause 60 seconds and then command **"FOR THE FIRST COMPETITION SERIES… LOAD."** After five (5) sec., the CRO will command **"START."** Finalists have 200 sec. to fire each five (5) shot MATCH series in kneeling. At 200 sec. or after all finalists have fired five (5) shots, the CRO will command **"STOP."** Immediately after the command **"STOP,"** the Announcer will give 15-20 sec. of comments on the current ranking of the athletes and notable scores. Individual shot scores are not announced. Immediately after the Announcer finishes, the CRO will command **"FOR THE NEXT COMPETITION SERIES, LOAD."** After five (5) sec., the CRO will command **"START."** At 200 sec. or after all finalists have fired five (5) shots, the CRO will command **"STOP."** Immediately after the command **"STOP,"** the Announcer will give 15-20 sec of additional comments on the rankings. Immediately after the Announcer finishes, the CRO will command **"FOR THE NEXT COMPETITION SERIES, LOAD."** After five (5) sec., the CRO will command **"START."** At 200 sec. or after all finalists have fired five (5) shots, the CRO will command **"STOP…UNLOAD."** A Range Officer must verify that rifle actions are open with safety flags inserted. Athletes who have completed the third series must remain in the kneeling position but may remove the rifle from the shoulder and not begin to dismantle or adjust their rifles until the changeover command is given.
g) **CHANGEOVER AND SIGHTING** **PRONE POSITION** **7:00 Minutes**	Immediately after the command **"STOP…UNLOAD,"** the CRO must start a combined Changeover and Sighting Time by commanding **"SEVEN MINUTES CHANGEOVER AND SIGHTING TIME…START."** After this command, finalists may handle their rifles to prepare them for the prone position, get into the prone position, remove safety flags, dry fire and fire unlimited sighting shots. After the changeover has begun, the announcer will make comments about the rankings and scores of the finalists after the kneeling position. At 30 sec. before the end of the Changeover and Sighting Time, the CRO will command **"30 SECONDS."** After seven (7) minutes, the CRO will command **"STOP."** This will be followed by a 30 sec. pause when the Technical Officer clears the targets for MATCH firing.

CamScanner

h) **PRONE POSITION MATCH FIRING** **3 x 5-shot series** **Time limit: 150 sec. for each series**	After 30 sec., the CRO will command **"FOR THE NEXT COMPETITION SERIES…LOAD."** After five (5) sec, the CRO will command **"START."** Finalists have 150 sec. to fire each 5-shot MATCH series in prone. The same command procedure and sequence of announcements will continue until finalists complete 3 x 5 shots in the prone position. After the third series, the CRO will command **"STOP…UNLOAD."** A Range Officer must verify that rifle actions are open with safety flags inserted. Athletes who have completed the third series must remain in the Prone position but may remove the rifle from the shoulder and not begin to dismantle or adjust their rifles until the changeover command is given.
i) **CHANGEOVER AND SIGHTING STANDING POSITION** **9:00 Minutes**	Immediately after the command **"STOP…UNLOAD,"** the CRO must start a combined Changeover and Sighting Time by commanding **"NINE MINUTES CHANGEOVER AND SIGHTING TIME…START."** After this command, finalists may handle their rifles to prepare them for the standing position, get into the standing position, remove safety flags, dry fire and fire unlimited sighting shots. After the changeover has begun, the announcer will make comments about the rankings and scores of the finalists after the kneeling and prone positions. At 30 sec. before the end of the Changeover and Sighting time, the CRO will command "**30 SECONDS."** After nine (9) minutes, the CRO will command **"STOP."** This will be followed by a 30 sec. pause when the Technical Officer clears the targets for MATCH firing.
j) **STANDING POSITION MATCH FIRING** **2 x 5-shot series** **5 x 1 shots** **Time limit: 250 sec. for each 5-shot series, 50 sec. for each single shot**	After 30 sec. the CRO will command **"FOR THE NEXT COMPETITION SERIES…LOAD."** After five (5) sec, the CRO will command **"START."** Finalists have 250 sec. to fire each 5-shot MATCH series in standing. The same command procedure and sequence of announcements will continue until the finalists have completed two (2) 5-shot series in the standing position. After the CRO commands **"STOP"** for the second series, the 8th and 7th place finalists are eliminated. The Announcer will recognize the athletes who are eliminated and comment on the results. Immediately after the Announcer finishes, the CRO will command **"FOR THE NEXT COMPETITION SHOT, LOAD."** After five (5) sec., the CRO will command **"START."** Finalists have 50 sec. to fire each single shot. Shot time countdown information must continue to be available to the athletes. At 50 sec. or after all finalists fire one (1) shot, the CRO will command **"STOP."** The Announcer will recognize the athlete who is eliminated and comment on the results. The CRO and Announcer will continue this command and announcement sequence until the last shot decides the gold and silver medal winners.
k) **ELIMINATIONS**	The two (2) lowest-ranking finalists are eliminated after the second standing series (40 shots total, 8th and 7th places). One (1) additional lowest-ranking athlete is eliminated after each of the five single shots that follow. After 41 shots – 6th place After 42 shots – 5th place After 43 shots – 4th place After 44 shots – 3rd place (bronze medal winner is decided) After 45 shots – 2nd and 1st places (silver and gold medal winners are decided).

CamScanner

l) **TIE-BREAKING**	If there is a tie for the lowest ranking athlete to be eliminated, the tied athletes will fire an additional tie-breaking shot(s) until the tie is broken. For tie-breaking shots, the CRO will immediately announce the family names of the tied athletes and their firing points and command them to fire their tie-breaking shots with the normal firing procedure. The Announcer will make no comments until the tie is broken. If the athletes in 7th and 8th place are tied, the tie will be broken according to the highest score in the last 5-shot series and then counting back to the next-to-last 5-shot series, etc.
m) **FINALS COMPLETION**	After the two (2) remaining finalists fire the last shot, and if there are no ties or protest, the CRO will command **"STOP…UNLOAD"** and the declare **"RESULTS ARE FINAL."** The Jury member in charge must assemble the three medallists on the FOP and the Announcer will immediately recognize the bronze, silver and gold medal winners according to 6.17.1.14 p.
n) **CHANGEOVER**	Athletes may not begin their changeover to the next position until the CRO gives the command **"START"** for the Changeover and Sighting Time. A warning will be given for the first violation. A two-point penalty applied on the first shot of the next series will be given for a second violation.
o) **COACHING**	Coaches may assist finalists by bringing equipment to the firing line before the Final or removing equipment after the Final. Coaches may not assist athletes during the changeovers. Non-verbal coaching is permitted; verbal coaching is only permitted during the changeover times, if the athlete steps back to the coach (the coach may not go to the athlete).

6.17.4 FINALS – 25m RAPID FIRE PISTOL MEN

a) **FINALS FORMAT**	The 25m Rapid Fire Pistol Men Final consists of eight (8) 5-shot 4-second series with hit or miss scoring and the elimination of the lowest scoring finalists, beginning after the fourth series and continuing until the eighth series when the gold and silver medals are decided.
b) **TARGETS**	Three (3) groups of five (5) 25m ESTs must be used. Two finalists are assigned to each group. The 1.50 m x 1.50 m shooting station (firing point) for each group is used. They must take their positions on the left and right sides of the shooting station so that at least one (1) foot touches the line that marks the left or right side of the shooting station as defined by Rule 6.4.11.7.
c) **SCORING** **DEDUCTIONS**	Scoring in the Final is hit or miss; each hit counts one (1) point; each miss counts zero (0) points. Any shot scoring 9.7 or higher on the 25m Rapid Fire Pistol target counts as a hit. Cumulative total scores (total number of hits) in the Final determine final rankings, with ties broken according to shoot-off scores. Deductions for violations occurring before the first MATCH shot will be applied to the score of the first MATCH series. Deductions for other penalties will be applied to the score of the series where the violation occurred.
d) **REPORTING TIME 30:00 and 20:00 min before**	Athletes must report 30 min. before the Start Time with their equipment and competition clothing. The Jury must complete equipment checks as soon as possible after the athlete reports. Athletes or their coaches must be allowed to place their equipment, including sufficient ammunition to complete the Final, on their firing points not less than 20 min. before the Start Time. Athlete equipment may include a reserve pistol that can be used to replace a malfunctioning pistol (safety flag must be inserted).

CamScanner

e) **CALL TO LINE, PREPARATION PERIOD AND SIGHTING SHOTS** **10:00 min. before**	The CRO will call the **"ATHLETES TO THE LINE"** ten (10) min. before the Start Time. After one (1) min., the CRO will begin the two (2) min. preparation period by commanding **"PREPARATION BEGINS NOW."** After two (2) min., the CRO will command **"END OF PREPARATION."** The Sighting Series consists of five (5) shots in four (4) seconds. Immediately after the preparation period, the CRO will command **"FOR THE SIGHTING SERIES, LOAD."** 30 sec. after the command **"LOAD,"** the CRO will call the name of the first (left) athletes in each group by stating **"(FAMILY NAME OF ATHLETE #1, FAMILY NAME OF ATHLETE #3, FAMILY NAME OF ATHLETE #5)."** After the athletes' names are announced, they are allowed to place magazines in their pistols and prepare to fire. 15 sec. after calling the names of finalists 1, 3 and 5, the CRO will command **"ATTENTION"** and turn the red lights on. These athletes must bring their pistols to the READY position (see 8.7.2). The green lights will come on after seven (7) sec. After the four (4) sec. firing period, the red lights will come on for 10-14 sec. (while targets are prepared for the next series). During this 10-14 sec. period, athletes may view their monitors. After the Technical Officer signals that the targets are ready, the CRO will announce **"(FAMILY NAME OF ATHLETE #2, FAMILY NAME OF ATHLETE #4, FAMILY NAME OF ATHLETE #6)."** After the athletes' names are announced, they may put magazines in their pistols and prepare to fire. Fifteen (15) sec. later, the command **"ATTENTION"** will be given and the timing procedure for that series will proceed. After the four (4) sec. firing period, the red lights will come on for 10-14 sec. During this 10-14 sec. period, athletes may view their monitors. No score announcements will be made for the sighting series. After all finalists complete their sighting series, they must place their unloaded pistols with safety flags inserted on the bench and turn to face the spectators for the presentation. A Range Officer must verify that pistol actions are open and there are no cartridges in the chambers or magazines.
f) **PRESENTATION OF FINALISTS** **4:45 min. before**	After finalists' pistols are checked, the Announcer will introduce the athletes, CRO and Jury Member-in-Charge according to Rule 6.17.1.12.

CamScanner

g) **DETAILED PROCEDURE FOR COMMANDS AND FIRING** **Competition firing starts at 0:00 min.**	Each Final MATCH series consists of five (5) shots in four (4) seconds. For each series, all finalists remaining in the competition will shoot separately and in succession. The order of firing for all series is from left to right. Immediately after the presentation, the CRO will command **"TAKE YOUR POSITIONS."** 15 sec. after the presentation, the CRO will command **"LOAD."** After the command **"LOAD,"** athletes have one (1) min. to load two (2) magazines (Rule 8.7.6.2 d does not apply in a Final). Only one (1) **"LOAD"** command is given before the start of the first MATCH series. During the entire Final, athletes may continue to load magazines as required. After the command **"LOAD,"** athletes may do aiming exercises, arm lifts or dry firing, except when the other athlete in the 5-target group is firing. During this time the athlete on the right in the 5-target group may take his pistol in his hand to prepare, but he may not do aiming exercises, arm lifts or dry firing. After the athlete on the left has fired, he must place his pistol down and step to the rear of the shooting station or not move while the athlete on the right fires his series. One (1) min. after the command **"LOAD,"** the CRO will call the name of the first athlete by stating **"(FAMILY NAME OF ATHLETE #1)."** After the athlete's name is announced, he may put the magazine in his pistol and prepare to fire. 15 sec. after calling the name of the first athlete, the CRO will command **"ATTENTION"** and turn the red lights on. The first athlete must bring his pistol to the READY position. The green lights will come on after a delay of seven (7) sec. After the four (4) sec. firing period, the red lights will come on for 10-14 sec. (recycling time of the targets). During this 10-14 sec. period, the CRO will report the score for that series (e.g. **"FOUR HITS"**). Immediately after the first athlete's score is announced and the Technical Officer signals that the targets are ready, the CRO will announce **"(FAMILY NAME OF ATHLETE #2)."** 15 sec. later, the command **"ATTENTION"** will be given and the timing procedure for that series will proceed. After that series, the CRO will report the score. The other athletes will continue to fire in order until all athletes remaining in the competition have fired that series. There will be a 15-20 sec. pause after all athletes complete one (1) series. During this pause, the Announcer will comment on the current ranking of the athletes, the best scores, athletes who were eliminated, etc. For the second series, the CRO will announce **"(FAMILY NAME OF ATHLETE #1)"** and continue this procedure until all finalists have fired four (4) series.
h) **ELIMINATIONS**	After all finalists fire the fourth series, the lowest-ranking athlete is eliminated (6th place). One (1) additional athlete is eliminated after each series that follows. After 5 series – 5th place After 6 series – 4th place After 7 series – 3rd place (bronze medal winner is decided) After 8 series – 2nd and 1st places (silver and gold medal winners are decided.)
i) **TIE-BREAKING**	If there is a tie for the lowest ranking athlete to be eliminated, the tied athletes will fire additional tie-breaking four (4) sec. series until the tie is broken. For all tie-breaking series, the athlete on the left starts. For the tie-breaking series, the CRO will immediately call the name of the first tied athlete by stating **"(FAMILY NAME OF ATHLETE #1)"** and the normal firing procedure applies. The Announcer will make no comments until the tie is broken.

CamScanner

j) **FINALS COMPLETION**	After the two (2) remaining finalists fire the eighth series, and if there are no ties or protest, the CRO will command **"STOP…UNLOAD"** and the declare **"RESULTS ARE FINAL."** The Jury must assemble the three medallists on the FOP and the Announcer will immediately recognize the bronze, silver and gold medal winners according to 6.17.1.14 p. Before any finalist or his coach may remove a pistol from the firing line, the Range Officer must check the pistol to be sure its action is open with a safety flag inserted, magazine removed and magazines unloaded. Pistols must be boxed before they are taken from the firing line.
k) **LATE SHOTS**	If an athlete fires a late shot or does not shoot at all five (5) targets in time, a deduction of one (1) hit for each overtime or unfired shot will be taken from the score for that series. The shot(s) will be marked with "OT."
l) **READY POSITION (8.7.2, 8.7.3)**	If the Jury determines that an athlete raises his arm too soon, or does not lower it sufficiently, the athlete must be penalized by a deduction of two (2) hits in that series **(Green Card)**. In a Final, no warning will be given. In case of repetition, the athlete must be disqualified (red card). To decide a READY position violation, at least two Competition Jury Members must give a sign (e. g. raising a flag) showing that an athlete raised his arm too quickly before a penalty or disqualification is imposed.
m) **MALFUNCTIONS (8.9)**	Malfunctions during the sighting series may not be claimed or refired. Only one malfunction (ALLOWABLE or NON-ALLOWABLE) may be claimed during the MATCH series. If a malfunction occurs during a MATCH series, a Range Officer must determine if the malfunction is ALLOWABLE or NON-ALLOWABLE. If the malfunction is ALLOWABLE, the athlete must repeat the series immediately, while the other finalists standby, and will receive the score of the repeat series. The athlete has 15 seconds to be ready for the repeat series. For any further malfunction, no repeat series is permitted and the hits that are displayed will be counted. If the malfunction is NON-ALLOWABLE, a penalty of two (2) hits must be deducted from the score for that series.

6.17.5 FINALS – 25m PISTOL WOMEN

a) **FINALS FORMAT**	The 25m Pistol Women Final consists of ten (10) 5-shot rapid-fire series with hit or miss scoring and the eliminations of the lowest scoring finalists, beginning after the fourth series and continuing until the tenth series when the gold and silver medals are decided.
b) **TARGETS**	Two (2) groups of five (5) 25m ESTs must be used. The targets are labelled A-B-R1-D-E-F-G-R2-I-J. In the Final, eight (8) finalists are assigned to positions A-B-D-E-F-G-I-J according to a random draw.
c) **SCORING** **DEDUCTIONS**	The Final starts from zero (0). Scoring is hit or miss; each shot within the hit zone is scored as one hit. Any shot scoring 10.2 or higher on the 25m Rapid Fire Pistol target counts as a hit. During the Final, results are cumulative with each athlete's final ranking determined by the total number of hits. If two or more athletes are tied for a place to be decided, they will fire additional series until the tie is broken. Deductions for violations occurring before the first MATCH shot will be applied to the score of the first MATCH series. Deductions for other penalties will be applied to the score of the series where the violation occurred.

CamScanner

d) **REPORTING TIME** **30:00 and 20:00 min. before**	Athletes must report at least 30 min. before the Start Time with their equipment and competition clothing. The Jury must complete equipment checks as soon as possible after each athlete reports. Athletes or their coaches must be allowed to place their equipment, including sufficient ammunition to complete the Final, on their firing points not less than 20 min. before the Start Time. Athlete equipment may include a reserve pistol that can be used to replace a malfunctioning pistol (safety flag must be inserted).
e) **CALL TO LINE, PREPARATION PERIOD AND SIGHTING SHOTS** **12:00 min. before**	The CRO will call **"ATHLETES TO THE LINE"** twelve (12) min. before Start Time. After one (1) minute, the CRO will start the two (2) min. preparation period with the command **"PREPARATION BEGINS NOW."** After two (2) min., the CRO will command **"END OF PREPARATION."** The sighting series consists of five (5) shots fired in the standard Rapid Fire sequence (Rule 8.7.6.4). Immediately after the preparation period, the CRO will command **"FOR THE SIGHTING SERIES, LOAD."** After this command athletes may place loaded magazines in their pistols and prepare to fire. 60 seconds after the command **"LOAD,"** the CRO will command **"ATTENTION"** and turn the red lights on. Athletes must bring their pistols to the READY position (Rule 8.7.2). After seven (7) sec. the first three (3) sec. green lights will come on. After the series, the CRO will command **"STOP…UNLOAD."** No score announcements are made after the sighting series. After the commands **"STOP…UNLOAD,"** Finalists must unload their guns, insert safety flags, lay them down or place them on the bench and turn to face spectators for the presentation. A Range Officer must verify that pistol actions are open with safety flags inserted.
f) **PRESENTATION OF FINALISTS** **6:15 min. before**	After Finalists' guns are checked, the Announcer will present the athletes, CRO and Jury Member-in-Charge according to Rule 6.17.1.12.

g) **DETAILED PROCE-DURE FOR COMMANDS AND FIRING** **Competition firing starts at 0:00 min.**	Immediately after the presentation, the CRO will command **"TAKE YOUR POSITIONS."** 15 sec. later, the first MATCH series will start and the CRO will command **"LOAD."** Finalists have one (1) min. to load two (2) magazines (Rule 8.7.6.2 d. does not apply for the Final). Only one (1) **"LOAD"** command is given before the start of the first MATCH series. During the entire Final, athletes may continue to load magazines as required. One (1) min. after the command **"LOAD,"** the CRO will command **"FIRST SERIES…READY."** After this command, athletes are allowed to place magazines in their pistols and prepare to fire. 15 sec. after the command **"READY,"** the CRO will command **"ATTENTION"** and turn the red lights on. Athletes must bring their pistols to the READY position (Rule 8.7.2). After seven (7) sec., the green lights will come on for the first three (3) sec. rapid-fire series. After the series is completed, the CRO will command **"STOP."** After the command **"STOP,"** the Announcer will give comments about the finalists' rankings and scores. 15 sec. after the Announcer finishes, the CRO will command **"NEXT SERIES…READY."** After 15 sec., the CRO will command **"ATTENTION."** This sequence will continue until all finalists fire four (4) series. After the fourth series, and if there are no ties involving eighth place, the CRO will command **"STOP."**

CamScanner

h) **ELIMINATIONS**	After all finalists fire the fourth series, the lowest-ranking athlete is eliminated (8th place). One (1) additional athlete is eliminated after each subsequent series: After 5 series – 7th place After 6 series – 6th place After 7 series – 5th place After 8 series – 4th place After 9 series – 3rd place (bronze medal winner) After 10 series - 2nd and 1st places (silver and gold medal winners) are decided
i) **TIE-BREAKING**	If two (2) or more athletes have the same score (total hits) for a place to be eliminated, tied athletes must fire additional tie-breaking 5-shot rapid fire series until the tie is broken. If there is a tie, the CRO will immediately announce the family names of the tied athletes and command them to fire the tie-breaking series with the normal firing procedure. The Announcer will make no comments until the tie is broken.
j) **FINALS COMPLETION**	After the tenth series, and if there are no ties involving 1st and 2nd places, the CRO will command **"STOP…UNLOAD"** and **"RESULTS ARE FINAL."** The Jury must assemble the three medallists on the FOP and the Announcer will immediately recognize the bronze, silver and gold medal winners according to 6.17.1.14 p.
k) **READY POSITION (8.7.2)**	If the Competition Jury determines that an athlete raises her arm too soon, or does not lower it sufficiently, the athlete must be penalized by a deduction of two (2) hits in that series (Green Card). In a Final, no warning will be given. In case of a second violation in a Final, the athlete must be Disqualified (Red Card). To decide a READY position violation, at least two Competition Jury Members must give a sign (e. g. raising a flag or card) showing that an athlete raised her arm too quickly before a penalty or disqualification is imposed.
l) **MALFUNCTIONS (8.9.1)**	Malfunctions during the Sighting series may not be claimed or completed. Only one malfunction (ALLOWABLE or NON-ALLOWABLE) may be claimed during a Final. If a malfunction occurs during a MATCH series, a Range Officer must determine if the malfunction is ALLOWABLE or NON-ALLOWABLE. If the malfunction is ALLOWABLE, the athlete must complete the series immediately while the other finalists stand by. The athlete has 15 sec. to be ready for the series completion. For any further malfunctions, no series completion is permitted and the hits that are displayed will be counted.

6.17.6 Medal Ceremonies

A Medal Ceremony to honour gold, silver and bronze medal winners must be conducted as soon as possible after each Final in accordance with Rule 3.9.6. ISSF standards for the conduct of Award Ceremonies are provided in the document ***Guidelines for Accreditation, Finals Ranges and Award Ceremonies*** that is available from ISSF Headquarters.

CamScanner

6.18 RIFLE AND PISTOL MIXED TEAM EVENTS

6.18.1 10m Air Rifle and 10m Air Pistol events

6.18.1.1 This Rule provides special technical rules for the 10m Air Rifle and Air Pistol Mixed Team events.

6.18.1.2 **Mixed Team Composition**

Two (2) Athletes from the same nation (1 male and 1 female).

6.18.1.3 **National identification / Dress code**

a) The athletes from each nation must display their National identification on their shooting clothing as follows:

b) **Rifle**: The name of the country denoted by 3 letters as determined by the IOC on their jacket pocket on the side which is turned to the audience. If the NOC is already on the shooting jacket, a National Flag should be placed or attached to the pocket facing the audience.

c) **Pistol**: The name of the country denoted by 3 letters as determined by the IOC should be placed on the sleeve of the T-shirt/sports jacket on the side which is turned to the audience.

6.18.1.4 **Mixed Team Entries**

a) Nations may enter a maximum of two teams in one Championship as per ISSF entry rules. Team members may be changed for other athletes registered in the Championship not later than 12:00 hours on the second day before the day of the Mixed Team competition. Any team that fails to confirm the registration of team members by this deadline, the team members will be entered by random from those eligible and subsequently cannot be changed.

b) The entry fee for each team is EUR 170.00 (Rule 8.4.2 Gen. Regs.).

6.18.1.5 **Competition Format**

10m Mixed Team events will be conducted in two stages:

a) QUALIFICATION

b) FINAL (Consisting of Stage 1, when the Bronze Medal is decided and Stage 2, when the Gold/Silver Medal is decided)

6.18.1.6 **Mixed Team Scores**

Scores and rankings are based on the total scores of the two team members.

6.18.1.7 **Coaching**

a) During Qualification, non-verbal coaching is allowed,

b) During the Final, each team is allowed one (1) Coach who must be seated where he/she can have access to and can communicate with their athletes. The Coach may request a “Timeout” by raising a hand immediately after the completion of a round whilst the announcements are being made. This may be requested once only during the Final. The Coach may approach and speak to his/her athlete(s) on the firing line, for a maximum time of one (1) minute, commencing when the Coach reaches the athletes.

c) The time will be controlled by the Jury member in Charge, who must announce “Time” when the one minute has expired, and the Coach must immediately return to his/her seat. If a “Timeout” is requested by one team, the Coach of the other team may also approach and speak to his/her athlete(s) at

CamScanner

the same time. This does not affect the opportunity of the other team to request their own Timeout.

6.18.1.8 **Firearm Malfunctions**

a) Malfunctions in Qualification will be governed according to Rule 6.13.

b) Malfunctions in the Final Medal Matches will be governed according to Rule 6.17.1.6. (Only one (1) allowable malfunction is permitted for each team during the Medal Match).

6.18.1.9 **EST Complaints and Score Protests**

a) EST complaints during the Qualification will be decided according to Rule 6.16.5.2.

b) See Rule 6.17.1.8 for EST complaints during Finals.

6.18.1.10 **Protests**

a) Protests during the Qualification will be decided according to Rule 6.16.

b) Protests made during Finals will be decided by the Finals Protest Jury according to Rules 6.17.1.10.d and 6.17.1.13.

6.18.1.11 **Medal Ceremonies**

Medal Ceremonies for Mixed Team events will be conducted according to Rule 6.17.6.

6.18.2 **QUALIFICATION**

6.18.2.1 **Location**

Mixed Team Qualifications will be fired on the Qualification Range in one or more relays.

6.18.2.2 **Allocation of firing points**

a) The firing points of the teams will be allocated by a random computer draw according to Rule 6.6.6.

b) Teams from the same nation must not be positioned next to each other.

c) Members of each team shoot next to each other with the female athlete on the left.

6.18.2.3 **Call to Line**

a) For each Qualification relay, the Chief Range Officer will call the athletes to the line twenty (20) minutes before the scheduled start time.

b) Athletes will be allowed ten (10) minutes to set up their equipment on their allocated firing points.

c) Athletes may not unbox their rifle/pistol nor place any equipment on their firing points until the CRO calls them to the line.

d) After athletes are called to the line, they are permitted to handle their rifle/pistol, remove safety flags, dry-fire and carry out holding and aiming exercises before the start of the Preparation and Sighting Time.

e) In the Final, athletes may not remove the safety flags or dry fire until the Preparation and Sighting Time starts.

6.18.2.4 **Preparation and Sighting Time**

CamScanner

Athletes must be allowed ten (10) minutes Preparation and Sighting Time with unlimited sighting shots before the start of the match.

a) The Preparation and Sighting Time must be timed to end approximately thirty (30) seconds before the official starting time of the match.

b) Pre-competition checks by the Range Officers must be completed during the ten (10) minutes before the Preparation and Sighting Time starts;

c) The Preparation and Sighting Time begins with the command **"PREPARATION AND SIGHTING TIME…START"**. No shot may be fired before the command **"START";**

d) If an athlete fires a shot before the "**START**" command for Preparation and Sighting time, the first competition shot must be scored as a miss, (0). If safety is involved the athlete may be disqualified

e) After nine minutes and thirty seconds of the Preparation and Sighting Time have elapsed, the CRO must announce **"30 SECONDS";**

f) At the end of the Preparation and Sighting Time, the Chief Range Officer must command, **"END OF PREPARATION AND SIGHTING…STOP".** There must be a brief pause of approximately thirty (30) seconds when the Target Officer will reset the targets for match firing, and;

g) If an athlete fires a shot after the command, **"END OF PREPARATION AND SIGHTING…STOP"** and before the **"MATCH FIRING…START"** command, the shot must not be counted as a match shot.

6.18.2.5 **Number of Match Shots and Time Limit**

a) In Qualification, each team member will fire thirty (30) match shots (60 total shots per team), with a time limit of thirty (30) minutes. Each athlete fires independently of their partner.

6.18.2.6 **Scoring**

In the Qualification rounds, decimal ring scoring (Rule 6.3.3.1) will be used for the 10m Rifle Mixed Team event. Full ring scoring will be used for the 10m Pistol Mixed Team event.

6.18.2.7 **Team Ranking**

a) The scores of each team member will be added together and the team results will be ranked.

b) Ties will be broken by applying Rule 6.15.5 (total of the two team member scores).

c) The four (4) top-ranked teams will proceed to the Finals.

d) Teams ranked 3rd and 4th will compete against each other in the Final Part 1.

e) Teams ranked 1st and 2nd will compete against each other in the Final Part 2.

CamScanner

6.18.3 **FINAL**

The Final consists of Stage 1 to decide the Bronze Medal followed by Final Stage 2, to decide the Gold/Silver Medals. The procedure for conducting both Final Parts will be the same, with appropriate wording used by the CRO in each case.

6.18.3.1 **Location**

10m Rifle and Pistol Mixed Team Finals must, if possible, be fired on a Finals Range. Results monitors visible to both members of each team must be available on the FOP.

6.18.3.2 **Procedure**

a) New Bib numbers will be allocated to be worn during the Final. They will be issued at Reporting Time.

b) Athletes in Final Stage 1, or their Coaches, must be allowed to place their equipment on their designated firing-points at least fifteen (15) minutes before the scheduled Start time. They must then leave the range and wait to be called to the line.

c) No bags or transport-boxes may be left on the Field of Play.

6.18.3.3 **Finals Officials**

The conduct and supervision of Mixed Team Finals will be in accordance with Rule 6.17.1.10.

6.18.3.4 **Reporting and Start Times**

a) The Start Time for the Final is when the CRO begins the commands for the first competition shot for Final Stage 1.

b) All eight athletes who qualify for the Final must report to the Finals Range Preparation Area, with all necessary equipment, at least thirty (30) minutes before the Start Time of Final Stage 1. A two-point (2) penalty will be deducted from the score of the first competition series if one or two team members do not report on time. Each team may be accompanied by one Coach.

c) If an athlete or Team reports later than twenty (20) minutes before the Start Time, the Team will not be allowed to start and will be ranked 4th if in Final Stage 1, or 2nd if in Final Stage 2.

d) If the Victory Ceremony is scheduled after the Final, all athletes must report with a national team uniform appropriate for a Victory Ceremony. Juries must complete equipment checks during the reporting period and as soon as possible after each athlete reports.

e) Athletes in Final Stage 1, or their Coaches, must be allowed to place their equipment on their designated firing-points at least fifteen (15) minutes before the scheduled Start time. They must then leave the range to wait to be called to the line.

f) Teams for both Parts of Final must be assembled in firing point order, for the call to the line, ten (10) minutes before the Start Time of Stage 1.

6.18.3.5 **Allocation of firing points**

a) For the Final Stage 1, the team ranked third after Qualification should take positions on firing points B and C, with the team ranked fourth on firing points F and G.

CamScanner

b) For the Final Stage 2, the team ranked first after Qualification should take positions on firing points B and C, with the team ranked second on firing points F and G.

c) Team members may change positions for the Medal Matches. If a change is desired, the team Coach must inform the RTS Jury which team member will shoot on the left and which team member will shoot on the right, before the end of Protest time when Preliminary Qualification scores are posted.

6.18.3.6 **Scoring**

a) All shots in the Finals, (both Rifle and Pistol) will be scored with decimal scoring.

b) The team with the highest combined score in each round, compared against the other team in the Final, wins two (2) points.

c) In case of equal scores each team receives one (1) point.

d) The first team to reach sixteen (16) points or more will win the relevant Final Part.

e) In case of a tie where both teams have scored at least sixteen (16) points, the Final will continue with one (1) additional shot fired by both members of each team to decide the tie.

f) If the scores are still tied the teams will continue to shoot additional shots on command until the tie is broken.

6.18.3.7 **EST Complaints during Finals**

a) During the Sighting time, if a team member or coach complains, or a Range Official observes that a paper strip is failing to advance, the CRO must command athletes to stop shooting and direct the Technical Officer to fix the problem. The sighting time must then be re-started.

b) If a team member complains that his target fails to register or that there is an unexpected zero or unexplained miss, the following steps must be taken:

c) The Jury Member in Charge must direct the athlete whose target malfunctioned to fire another shot. If the additional shot registers, the value of the additional shot will be counted and the missing shot will be ignored. If the additional shot does not register, the Jury must stop the competition and move the athlete to a reserve target.

d) If an athlete is moved to a reserve target, when ready to resume, all athletes will be given two (2) minutes of unlimited sighting shots. The athlete who was moved will then fire his/her match shot in fifty (50) seconds and the competition will continue.

6.18.3.8 **Call to Line**

Teams for both Final Parts will enter the FOP one at a time. As each Team enters the FOP the Announcer will introduce them to the spectators. Athletes must stand in front of their designated firing points, facing the audience, and remain in that position until all have been presented, including the Jury Member in Charge, and the Chief Range Officer.

Teams for the Final Stage 2 will return to the Preparation area.

6.18.3.9 **Preparation and Sighting Time**

CamScanner

After one (1) minute, the CRO will command:

"FIVE MINUTES PREPARATION AND SIGHTING TIME…START". After four (4) minutes and thirty (30) seconds, the CRO will announce: **"30 SECONDS."** After five (5) minutes, the CRO will command **"STOP…UNLOAD."**

6.18.4 **FINAL PROCEDURE**

a) One (1) minute after the end of Preparation and Sighting time, the CRO will command:

b) **"FOR THE FIRST COMPETITON SHOT, LOAD**…five (*5) seconds*… **START"**.

c) Each team member will fire a single shot in a maximum time of fifty (50) seconds.

d) Either athlete may fire first.

e) The CRO may call **"STOP"** after all athletes have fired.

f) Immediately after the command **"STOP,"** the team with the highest combined score of each round will be announced together with the number of points awarded.

g) The Announcer will give 15-20 seconds of comments on the current ranking of the teams and notable scores. Individual shot scores are not announced.

h) The firing sequence will be repeated until the relevant Final Part is decided.

6.18.4.1 **Final Stage 1 Completion**

a) As soon as the Bronze Medal is decided, the CRO will command **"STOP... UNLOAD" if there are no protests or ties, he will declare "RESULTS ARE FINAL"**. The announcer will declare the Bronze Medal Winning team.

b) A Range Officer must verify that the rifle/pistol actions are open with the safety flags inserted.

6.18.4.2 **Change-Over between Final Stage 1 and Stage 2**

a) The athletes in Stage 1 must leave the Field of Play to place their rifles/ pistols in a safe place in the Reporting Area but may return to sit and watch Final Stage 2 in their allocated seats.

b) After at least five (5) minutes, from the Bronze Medal being decided and after the targets have been checked by the RTS Jury and the CRO has declared, **"Range clear"**, athletes for Final Stage 2 and/or their Coaches, must be allowed to place their equipment on their firing-points.

c) They must then leave the range to wait to be called to the line.

6.18.4.3 **Final Stage 2 Completion**

a) As soon as the Gold/Silver medals are decided the CRO will command **"STOP...UNLOAD"** declare **"RESULTS ARE FINAL**" and the announcer will declare the Gold and Silver Medal Winning teams.

b) A Range Officer must verify that the rifle/pistol actions are open with the safety flags inserted.

c) The Gold and Silver Medallists must be joined on the Field of Play by the Bronze medallists and the Jury will line them up, as in the Individual Finals, for official photographs and announcements. Athletes may be allowed to hold their rifles/pistols for the photographs so the Bronze medallists must retrieve them

CamScanner

from the Reporting Area and return without delay.

6.18.4.4 **Finals Production and Music**

a) During the Qualification stage music must be played.

b) During the Medal Matches music must be played.

c) The Technical Delegate should approve the music programme. Enthusiastic audience support is encouraged and is recommended during the Medal Matches.

6.18.4.5 **Irregular or disputed matters**

ISSF General Technical Rule 6.17 will apply to matters not mentioned in the above rules. Irregular or disputed matters will be decided by the Jury according to General Technical Rules for each event.

FINALS FOR SHOTGUN EVENTS

6.19 FINALS IN OLYMPIC SHOTGUN EVENTS

Finals may be conducted either on a separate range designated as a Finals Range and not used for Qualification competition or on one of the ranges used for Qualification competition.

6.19.1 FINALS IN INDIVIDUAL SHOTGUN EVENTS

6.19.1.1 **TRAP and SKEET**

6.19.1.2 **General**

The Trap and Skeet individual events consist of two stages: Qualification and Final.

6.19.1.3 **Qualification**

The Qualification stage will be conducted according to the Competition Procedures specified in the current Shotgun rules (Trap, section 9.8 and Skeet, section 9.10).

6.19.2 FINALS FORMAT

PROCEDURES APPLYING TO TRAP & SKEET INDIVIDUAL EVENTS

6.19.2.1 **Finals Format:**

a) The full programme (General Regulations, 3.3.5) must be fired in each Olympic event as a Qualification for the Finals. The six (6) highest-ranking athletes in the Qualification advance to the Finals;

b) Finals consist of finalists firing at a series of target sequences, with progressive eliminations beginning after all finalists have fired at the required number of targets (25 or 20 targets, depending upon the event) and continuing until the gold and silver medals are decided;

c) Finalists start at zero; scores from the Qualification are not carried forward.

6.19.3 General Finals Requirements

6.19.3.1 **Reporting Time:**

a) Athletes in the Final must report to the Finals Range not later than 30

CamScanner

minutes before the Final Start Time;

b) A two (2) point penalty will be deducted from the score of the first hits in the Final if the athlete does not report on time;

c) Athletes must report with their equipment, competition clothing and a national team uniform that may be worn in the victory ceremony. The Jury must confirm that all finalists are present and that their names and nations are correctly recorded in the results system and on the scoreboards. Juries must complete cartridge and equipment controls as soon as possible after the athletes report; and

d) Any finalist who does not report for the start of the Athlete Presentation will not start and will be ranked last in the Final.

6.19.3.2 **Start Time**. The Start Time for the Finals is when the Referee command **"READY"** is given for the first competition shot.

6.19.3.3 **Start Positions and Bib Numbers**. New bib numbers (1-6) must be issued for the Finals. Starting positions in Finals are assigned according to the Qualification ranking, with the highest ranking athlete having bib number 1. In shoot-offs to decide medals, athletes must shoot in bib number order (lowest number shoots first).

6.19.3.4 **Test Firing and Showing Targets**. Before the start of the Finals, targets must be shown and the finalists must be permitted to test fire.

6.19.3.5 **Finals Facilities & Special Equipmen**t

(see ISSF Guidelines for Organizers for detailed requirements).

a) The Finals Range must have a large spectator stand and a designated reporting area where cartridge controls can be done, where finalists can report.

b) Finals Ranges must be equipped with the following equipment:

• A speaker system for use by the Announcer/Commentator and the sound/ music technician.

• Seating for Jury members, the Coaches/Team Officials and the Finalists.

• An electronic, colour scoreboard (see ISSF Guidelines for Organizers for detailed requirements).

• An electronic timing system (to control preparation time limits).

• Seating and table for the score keeper.

• A big clock positioned in a place where it can be observed by athletes and officials.

• A Walkie-talkie for communication between the Referees/Jury/Technical Officials.

6.19.3.6 **Finals Officials.**

The following personnel shall conduct and supervise the Final:

a) Referee:

An experienced official with an ISSF Shotgun Referee's licence, appointed by the Chief Referee, in consultation with the Jury, must conduct the Final.

CamScanner

Whenever possible the appointed Referee must originate from a nation which does not have any athlete(s) in the Final;

b) Assistant Referees & Timing System Referee:

Two Referees must be appointed as Assistant Referees to assist and advise the Referee in charge. An additional Referee must be appointed to manage the electronic timing device. A further additional Referee must be appointed to keep a manual scoreboard. All Referees shall be selected by the Chief Referee from the appointed Competition Referees. It is the responsibility of the Chief Referee to ensure that the appointed Referee, Assistant Referees and Timing System Referee are present at the Finals Range on time to conduct the Final.

c) Jury-Member-in-Charge:

One (1) Jury member must be designated, by the Jury Chairman, as the Jury-Member-in-Charge of the Final.

d) Competition Jury:

The Competition Jury must supervise the conduct of the Final. One (1) Jury member must be designated as the Jury-Member-in-Charge, of the Final;

e) Finals Protest Jury,

Composed of three (3) persons:

The Jury Member-in-Charge and two (2) other members of the Competition Jury, as designated by the Jury Chairman (can be also the Jury Chairman), who must decide any protests that may be made during the Final. Their decision is final.

f) Technical Officer:

The Official Results Provider appoints the Technical Officer to prepare and operate the technical scoring system and the graphic display of results. In case of technical problems that may influence the Final, he will contact the Jury-Member-in-Charge and the Referee directly so appropriate decisions may be taken quickly;

g) Announcer/Commentator:

An Announcer/Commentator designated by the ISSF or the Organizing Committee must be responsible for introducing finalists, announcing scores and providing information to spectators.

h) Sound Technician:

A technical official responsible for operating the sound and music system during competitions.

6.19.3.7 **Finals Production and Music**

a) The conduct of a Final must use music, announcements, commentary, staging and commands in a total sports presentation that portrays the athletes and their competitive performances in the most appealing and exciting ways to spectator and television audiences.

b) The Technical Delegate in consultation with the Jury should approve the music programme. Enthusiastic audience support is encouraged and is recommended during the Finals.

6.19.4 **Competition Procedures.** Finals competitions are conducted according to

CamScanner

these procedures. The Technical Rules for each event also apply to the Finals except where differences are described in this Rule (Rule 9.17).

6.19.4.1 **Trap**. Finalists shoot one shot only at each target. Finalists occupy stations 1-2-3-4-5-6 in Bib Number order (6.19.6.3, lowest Bib Number on Station 1). After each athlete has shot on a station, he must move to the next station to fire in sequence on that station. A timing system to control the 12-second preparation time limit must be used. Each Final consists of a series of target sequences followed by progressive eliminations that continue until the gold and silver medals are decided, as follows:

a) After the six finalists complete a normal round of 25 targets, the 6th place athlete is decided;

b) After the five remaining finalists shoot at another 5 targets and complete 30 targets, the 5th place athlete is decided;

c) After the four remaining finalists shoot at another 5 targets and complete 35 targets, the 4th place athlete is decided;

d) After the three remaining finalists shot at another 5 targets and complete 40 targets, the 3rd place (bronze medalist) athlete is decided;

e) The 5-target sequences in b), c) and d) above consists of 2 left, 2 right and 1 straight randomly selected targets for each finalist.

f) And after the two remaining finalists shoot at another 10 targets and complete 50 targets, the gold and silver medals (1st and 2nd places) will be decided, in case of a tie there is an immediate shoot-off.

g) The 10-target sequence in f) above consists of 4 left, 4 right and 2 straight randomly selected targets for each finalist.

6.19.4.2 **Skeet.** Finalists will shoot on each station in bib number order. A timing system to control the 30-second preparation time limit must be used. Each Final consists of series of target sequences followed by progressive eliminations that continue until the gold and silver medals are decided, as follows:

a) All six finalists will shoot, in sequence, at 20 targets, with one regular double and one reverse double on station 3, one regular double on station 4, one regular double and one reverse double on station 5, one regular double and one reverse double on station 3, one reverse double on station 4 and one regular double and one reverse double on station 5. After the six finalists complete 20 targets, the 6th place athlete will be decided;

b) The five remaining finalists will shoot another 10 targets, with one regular double and one reverse double on station 3, one regular double on station 4 and one regular double and one reverse double on station 5. After 30 targets, the 5th place athlete will be decided;

c) The four remaining finalists will shoot another 10 targets with one regular double and one reverse double on station 3, one reverse double on station 4 and one regular double and one reverse double on station 5. After 40 targets, the 4th place athlete will be decided;

d) The three remaining athletes will shoot another 10 targets, with one regular double and one reverse double on station 3, one regular double on station 4 and one regular double and one reverse double on station 5. After 50 targets, the 3rd place athlete (bronze medalist) will be decided;

CamScanner

e) The two remaining athletes will shoot another 10 targets, with one regular double and one reverse double on station 3, one reverse double on station 4 and one regular double and one reverse double on station 5. After 60 targets, the gold and silver medal winners (1st and 2nd places) will be decided, in case of a tie there is an immediate shoot-off; and

f) On station 4, the Referee must inform the first finalist whether the double is a regular double or a reverse double.

6.19.4.3 **Tie-Breaking (Shoot-off) Procedures.** Ties for places three through six will be broken according to the bib number order (Qualification ranking). If there is a tie for Gold and Silver medal places, the shoot-off will begin immediately and there will be no showing of targets or test firing. The shoot-off will be conducted according to these procedures:

a) **Trap.** The athletes must line up behind Station 1 in bib number order. Starting on Station 1, they must each shoot at regular targets until the tie is broken according to the following sequence: Station 1 left target, Station 2 right target, station 3 left target, Station 4 right target, Station 5 left target, then Station 1 again this time shooting at a right target and so on. Only one (1) shot is permitted at each target. After shooting, the athlete must move to the rear of the athlete who has yet to shoot.

b) **Skeet.** The tied athletes must line up behind Station 3 in bib number order. The athletes must shoot one regular Double; if the tie is not broken with the first Double, they must shoot one reverse Double on that station; if the tie is not broken they advance to Station 4 to shoot one regular Double, and if the tie is not broken one reverse Double; this sequence continues on Station 5 and then back to Station 3, etc. until the tie is broken.

6.19.5 **Procedure For Conducting Finals**

Time	Stage	Procedure
a) 30:00 minutes before	**Finalists Report for Cartridge Control**	Team Leaders are responsible for ensuring that their athletes report at the Finals Range on time (Rule 6.19.3.1). The Jury will instruct the finalists to place all of their cartridges in numbered boxes (corresponding with bib numbers). The Jury will select cartridges for cartridge control and conduct equipment inspections. Cartridge checks must be completed before the presentation. Athletes may leave the FOP and must return 15:00 min. before the start of the Final. No additional cartridges may be brought to the FOP.
b) 10:00 minutes before	**Target Showing and Test Fire**	The Referee will authorize the finalists to complete their warm-ups and test fire shots and show the targets according to the rules for each event.
c) 5:00 minutes before	**Assemble for Introductions**	The six (6) finalists, the Referee and the Jury Member-in-Charge must report to a designated presentation area in the centre of the range.
d) 4:00 minutes before	**Introduction of Finalists**	The Announcer will introduce, in bib number order (with number one on the right, as they face the audience), the finalists by giving the name, nation and brief information about each finalist. The Announcer must also introduce the Referee and the Jury Member-in-Charge.

CamScanner

e) 1:00 minute before	**Final Preparation**	One (1) minute before the first Finals shot, the Referee will instruct the finalists to go to their shooting stations.
f) Competition firing starts at 0:00 min.	**Start of Final**	The Referee will instruct the first athlete to begin with the command "READY." Each athlete in Trap has twelve (12) seconds to call for each target. In Skeet, on every station, each finalist has thirty (30) seconds after occupying the station to call for and fire at Doubles.
g) **Scoreboard Pauses**		In Trap Finals, scoreboard pauses will occur after all finalists have fired at 10 and 20 targets and subsequently after every 5 targets. In Skeet Finals, scoreboard pauses will occur after all athletes have completed one station. Television productions will use this pause to display current scores and rankings for spectators. The Announcer will make brief comments about the athletes and scores and, as appropriate, recognize the athletes who are eliminated or announce that a tie-breaking shoot-off will take place. After 5-25 seconds, the Referee will instruct the first athlete to start the next shots with the command "READY."
h) **Finals Completion**		If there is no tie for the gold medal, the Jury Member-in-Charge will immediately declare **"RESULTS ARE FINAL."** If there is a tie, the Jury Member-in-Charge will direct the Referee to conduct the tie-breaking shoot-off until the tie is broken. After the tie is broken, the Jury Member-in-Charge must immediately declare **"RESULTS ARE FINAL."**
i) **After Medals are Decided**		After the Jury Member-in-Charge declares **"RESULTS ARE FINAL,"** the Announcer must immediately recognize the medal winners by announcing: **"THE GOLD MEDAL WINNER, REPRESENTING (NATION), IS (NAME)."** **"THE SILVER MEDAL WINNER, REPRESENTING (NATION), IS (NAME)."** **"THE BRONZE MEDAL WINNER, REPRESENTING (NATION), IS (NAME)."** (Rule 6.17.1.14 p)

6.19.6 Malfunctions during the Final

a) If the Referee decides that a disabled shotgun, or the malfunctioning of the shotgun or ammunition, is not the fault of the athlete, the athlete must be given not more than three (3) minutes in which to repair the shotgun or obtain another approved shotgun, or replace his ammunition. If this cannot be done within three (3) minutes, the athlete must withdraw.

b) After the malfunction is corrected or the athlete withdraws, the Final must continue. A withdrawn athlete's final ranking will be determined by the total number of targets hit when the malfunction occurred.

c) An athlete is allowed a maximum of two (2) malfunctions during a Final, including any shoot-offs, whether or not he has tried to correct the malfunction.

d) Any regular target(s) on which any further malfunction occurs will be

CamScanner

declared **"LOST"** whether or not the athlete attempted to fire.

6.19.7 **Protests during the Final**

a) If an athlete disagrees with a Referee's decision regarding **"HIT," "LOST," "NO TARGET"** or **"IRREGULAR"** target(s), he/she must act immediately before the next athlete fires, by raising an arm and saying **"PROTEST."**

b) The Referee must then temporarily interrupt the shooting and after hearing the opinions of the Assistant Referees, make his decision. No protest will be accepted after the next athlete fires.

c) Any other protest by the athlete or coach will be decided by the Finals Protest Jury immediately. The decision of the Finals Protest Jury is final and cannot be appealed.

d) If a protest in a Final for any matter other than Referee decisions on **"HIT," "LOST," "NO TARGET"** or **"IRREGULAR"** targets is lost, a penalty of two (2) points must apply to the last two (2) "HIT" targets.

e) No protest fee applies in Finals.

6.20 SHOTGUN SKEET MIXED TEAM EVENT

6.20.1 GENERAL

a) Mixed Teams consist of two team members, one male and one female from the same nation. Both Mixed Team members should wear the same competition clothing with national colours and identification.

b) In one Championship, nations may enter a maximum of two (2) Mixed Teams in one Mixed Team event, as per ISSF General Regulations.

c) Mixed Team members may be changed for other athletes already registered in the Championship not later than 12:00 hours on the second day of the individual competition before the day of the Mixed Team competition.

d) The Mixed Team event consists of two stages: Qualification and Final.

6.20.2 QUALIFICATION

a) The Qualification will be conducted according to the Competition Procedures and Rulings as specified in the current ISSF Shotgun rules for Skeet (section 9.10) unless otherwise specified in these rules.

b) Team squadding will be done by a random draw. The two members of each Mixed Team must be squadded to fire next to each other in the same squad, with the male firing first and the female second. Teams from the same nation shall not be in the same squad. Athletes will wear the same Bib numbers as those worn in the individual competition.

c) Each member of the Mixed Team will shoot 75 targets, in 3 rounds of 25 targets each – (3 rounds X 25 targets = 75 targets X 2 athletes = Total 150 targets for each team).

d) After the end of the Qualification, the ranking of the Mixed Teams will be decided by the combined results of the 2 members of each Mixed Team (1 male & 1 female) 75 X 2 = 150 (as per ISSF Shotgun Rules 9.14.5.1).

e) The four (4) highest-ranking Mixed Teams after qualification and any eventual shoot-offs will qualify for the Final (Stage 1 and Stage 2).

f) Any ties for places 1 to 4 will be decided by a shoot-off on station 4 only, as

CamScanner

specified within Rule 9.15.

g) After the Qualification stage and any eventual shoot-offs, new Bib numbers (1^1-1^2, 2^1-2^2, 3^1-3^2, 4^1-4^2) will be distributed to the top 4 qualified Mixed Teams.

h) The ranking of tied Mixed Teams in 5th place or below not decided by a shoot-off will be established on the basis of the ISSF Shotgun Rules 9.14.5.1 & 9.15.3.4

6.20.3 **PROCEDURE DURING SHOOT-OFFS AFTER QUALIFICATION**

a) The starting positions in the shoot-offs of tied Mixed Teams after the qualification will be decided by the Qualification Ranking (highest ranking Mixed Team to shoot first, followed by the lower ranked team(s)).

b) The starting positions in the shoot-offs, of teams with perfect ties or ties that cannot be broken by the count back rule will be decided by draw.

c) Before the shoot-offs, athletes will observe the targets (one normal and one reverse double) and test fire.

d) Each Mixed Team Coach/Team Official must designate which team member (male or female) will shoot first and which team member will shoot second. The order of shooting between the two members of each team (as decided by the Coach/Team Official) must remain the same throughout the shoot-off.

e) The shoot-off will be conducted only on station 4.

f) The athletes of the highest-ranking Mixed Team in the order designated by the Coach/Team Official must line up behind the station. The athlete designated to shoot first (male or female) must shoot at a regular double followed by the second member of the team who will also shoot at a regular double. The athletes of the other Mixed Team(s) must then do likewise and each shoot at a normal double in their designated order. The Mixed Team(s) with the lower number of hits, out of the 4 shots (2+2=4), will be eliminated and will take the lower place.

g) If the tie(s) is(are) not broken, the same procedure will continue on the same station in the same order but with reverse doubles. The athletes (who will shoot first and who will shoot second) will remain the same throughout the shoot-off, as per d) above.

h) If still the tie(s) is(are) not broken, then the shoot-off will continue on the same station, with the same sequence (shooting first at normal and then at reverse doubles) with the higher ranked Mixed Team shooting first followed by the other Mixed Team(s), until the tie(s) is(are) broken.

i) The preparation time limit is 15 seconds monitored by an electronic timer managed by a Referee selected from among the appointed Referees.

j) In case of several shoot-offs, the lower position shoot-offs will be shot first.

6.20.4 **FINAL**

a) The Final is in two parts consisting of Final Stage 1 to decide the Bronze medal and Final Stage 2 to decide the Gold/Silver Medals.

b) <u>Final Stage 1:</u>

Composed of the Mixed Teams in positions 3 and 4 after Qualification or any eventual shoot-offs.

c) <u>Final Stage 2:</u>

CamScanner

Composed of the Mixed Teams in positions 1 and 2 after Qualification or any eventual shoot-offs.

d) Final Stage 1 will be shot first followed by Final Stage 2.

e) The Final Stages 1 and 2 must be conducted on the Finals Range.

6.20.4.1 **Competition Format of Mixed Team Skeet in Fina**l.

a) The starting positions in the Final are decided by the Bib number of each Mixed Team on the basis of their qualification ranking and any eventual shoot-offs after qualification (the lower Bib number team to shoot first followed by the higher Bib number team).

b) Before the start, athletes will be allowed to test fire only. There will be no showing of targets, as this will be conducted during the presentation of all the qualified Mixed Teams in the Final.

c) The preparation time limit, on each station is 30 seconds monitored by an electronic timer managed by a Referee selected from among the appointed Referees.

d) The 2 Mixed Teams (composed of 4 athletes) will start from 0 and compete on stations 3, 4, 5, 3, 4 and 5 until the winners are decided as follows:

e) The Mixed Team with the lower Bib number will shoot first, starting from station 3 and followed by the second Mixed Team. The two athletes from each Mixed Team will each shoot, in Bib number order, 2 doubles (1 normal and 1 reverse double), 4 shots (8 shots per Mixed Team).

f) The shooting sequence **(which team will shoot first) will alternate between the two Mixed Teams, after each statio**n (i.e., on station 4 the 2nd team will shoot first followed by the 1st team. On station 5 the 1st team will shoot first followed by the 2nd team and so on).

g) The combined scores for each team after each station will be carried forward to the next station.

h) This process will continue in sequence on stations 3,4,5,3,4 and 5 (6 stations) and the Mixed Team with highest combined score will be the winner.

i) If the shooting sequence is completed on all 6 stations and there is a tied score, then the winning Mixed team will be decided by a shoot-off, as per procedures specified in 9.20.3.3 below.

6.20.4.2 **Procedure of Mixed Team Skeet During Shoot-offs in Final.**

a) The starting positions in the event of a shoot-off in Final Stages 1 and 2 will be decided by the Bib number of each team. The lower Bib number team will shoot first followed by the second team.

b) The athletes of each Mixed Team will shoot in Bib number order, one behind the other. This order of shooting between the two members of each team must remain the same throughout the shoot-off.

c) The shoot-off will be conducted on stations 3, 4, 5.

d) The athletes of the Mixed Team with the lower Bib number must line up behind station 3 and each shoot at a normal double in Bib number order. Then likewise the athletes of the second team will each shoot at a normal double in Bib number order. The Team with the higher number of hits out of the 4 shots

CamScanner

(2+2=4) will be the winner. If the tie is not broken the same sequence must continue on the same station but with reverse doubles.

e) If the tie is not broken on station 3, the same procedure will continue in the same order and sequence on station 4, if tie still not broken, then station 5, with the members of each Team shooting first at normal and then at reverse doubles until the tie is broken.

f) If the tie remains, athletes will continue to shoot in the same sequence but starting with reverse and then normal on stations 3, 4 and 5 until the tie is broken.

g) The preparation time limit is 15 seconds monitored by an electronic timer managed by a Referee selected from among the appointed Referees.

h) There will be no target observation or test fire before the shoot-offs in a Final.

6.20.4.3 **MIXED TEAM SKEET PROCEDURES.**

6.20.4.4 **Coaching Timeout**

In the Final (Stages 1 and 2), while shooting is in progress, Coaches/Team Officials, without disturbing the athletes, may request from the Jury Member in Charge, one (1) Coaching Timeout for a maximum duration of one (1) minute. The Jury Member in Charge will then, at the turn of that team's athlete(s) to fire, without disturbing the shooting procedure decide when to stop shooting and allow the Coach/Team Official to approach and speak to the his/her athletes, on the shooting station. The other Coach/Team Official may, during this time, also approach and speak to his/her athletes without losing the opportunity for a timeout. The Jury Member in Charge must control the time.

6.20.4.5 **Reporting Times and Cartridge Control**

a) The members of the four (4) qualified Mixed Teams in the Final or their representatives (Coaches or Team Officials) must report to the Finals Range (at the designated area) for cartridge control at least **30 minutes** before the scheduled Start Time of the Final (Stage 1). At this time the Jury will distribute the Bib numbers to all the athletes of the four (4) qualified Mixed Teams.

b) The Equipment Control Jury will instruct the members of each Mixed Team or their representatives (Coaches or Team Officials) to place all of their cartridges in numbered boxes (corresponding to the Bib numbers of their Team). The Equipment Control Jury will select cartridges to be checked and seal the boxes in the presence of the Team members or Coach/Team Official and conduct equipment inspections. Cartridge checks must be completed before the presentations.

c) The members of the Qualified Mixed Teams must present themselves to the Finals Range, **15 minutes**, before the start of the Final (Stage 1), for preliminaries and presentation

d) No additional cartridges may be brought to the FOP.

e) A two (2) hit penalty will be deducted from the score of the first series of the first athlete, if any of the Mixed Team's cartridges are not presented 30 minutes before the start of the Final (Stage 1) or if either of the Team members does not report 15 minutes before the start of the Final (Stage 1). Any team that does not report at the time of the Presentations will not be allowed to take part in the Final and will be awarded the 4th place (if in Stage 1) or the 2nd place (if in Stage 2).

CamScanner

6.20.4.6 **Target Observation – Presentation – Test Fire**

a) After reporting at the range, the athletes of the Qualified Mixed Teams of Final Stage 1 will be allowed to take their cartridges from the boxes (the athletes of the Final Stage 2 will not be allowed at this stage to take their cartridges). Then, all four (4) Qualified Mixed Teams will be asked to go to the shooting stations for aiming exercises and target observation only (no test fire).

b) All the members of the Qualified Mixed Teams will be allowed to observe the targets.

c) After aiming exercises and target observation, the Qualified Teams of the Final Stage 2 will be asked to be seated at the designated area. The athletes of the Qualified Teams of the Final Stage 1 together with their Coaches or Team Officials will assemble in a designated area to the side of the range, to await being called for presentation. The teams will line up in Bib number order. The Qualified Teams in Final Stage 1 will enter the field of play (female athlete first – male athlete second) followed by their Coach/Team Official and the announcer will introduce them to the spectators. The Teams must remain facing the spectators until all have been presented, including the Jury Member in Charge and the appointed Referee who must be positioned in the middle of the two teams.

d) The Mixed Teams, will line up, in Bib number order, in the following order:

Female athlete – Male athlete – Coach/Team Official.

e) The Jury member in Charge must make sure, that the Teams are assembled in the correct order.

f) The Final will be conducted in the order specified in rule 6.20.1.d).

g) It should be noted that after completion of the Final Stage 1 the athletes for Final Stage 2, will take their cartridges from their boxes. The finalists, their Coaches or Team Officials, the Jury member in Charge and the appointed Referee will be presented in the way specified in d) above. After presentation the athletes will go to the shooting stations and test fire after which the Match will begin.

h) At the end of the Final the Gold, Silver and Bronze Medalists are assembled by the Jury Member in Charge, on the field of play for official photographs and announcement, (Rule 6.17.1.14 p) s

6.20.4.7 **Music and Audience Support**

During the Final, music must be played. The Jury should approve the music selected. Enthusiastic audience support is encouraged and is recommended during the matches.

6.20.4.8 **Malfunctions During Final (Parts 1 and 2).**

a) If the Referee decides that a disabled shotgun, or the malfunctioning of the shotgun or ammunition, is not the fault of the athlete, the athlete must be given not more than three (3) minutes in which to repair the shotgun or obtain another approved shotgun, or replace his ammunition. If this cannot be done within three (3) minutes, the athlete (Mixed Team) must withdraw. After the malfunction is corrected, the Final must continue.

b) If a withdrawal of a team occurs during Final Stage 1 or 2 the remaining Mixed Team must be declared as the winner.

c) A Mixed Team is allowed a maximum of two (2) malfunctions during a Final,

CamScanner

including any shoot-offs, whether or not there was an attempt to correct the malfunction.

d) Any regular target(s) on which any further malfunction occurs will be declared “LOST” whether or not the athlete attempted to fire.

6.20.5 **Protest During Final (Stages 1 and 2).**

a) If an athlete disagrees with a Referee’s decision regarding **“HIT,” “LOST,” “NO TARGET”** or **“IRREGULAR”** target(s), the athlete must act immediately, before the next athlete fires, by raising an arm and saying **“PROTEST.**”

b) The Referee must then temporarily interrupt the shooting and after hearing the opinions of the Assistant Referees, make his decision. No protest will be accepted after the next athlete fires.

c) Any other protest by the athlete or coach will be decided by the Finals Protest Jury immediately. The decision of the Finals Protest Jury is final and cannot be appealed.

d) If a protest in a Final for any matter other than Referee decisions on **“HIT,” “LOST,” “NO TARGET”** or **“IRREGULAR**” targets is lost, a penalty of two (2) points must apply to the last two (2) “HIT” targets, of the athlete (Mixed Team).

6.20.5.1 **Colour of Targets**

Qualification: Normal targets

Final: Flash targets

6.20.5.2 **Irregular or Disputed Cases**

a) The General Technical Rules will apply to matters not mentioned in the above paragraphs.

b) Irregular or disputed matters will be decided by the Jury according to the General Technical Rules or other relevant Rule for each event.

CamScanner

6.21 FORMS

Forms to be used in conducting ISSF Championships are provided on the following pages as follows:

a) **PROTEST FORM (Form P)**

b) **APPEAL FORM (Form AP)**

c) **Range Incident Report Form (Form IR)**

d) **Scoring and Results Office Score Notification Form (Form CN)**

e) **25m Rapid Fire Pistol Men Malfunction Score Computation Form (Form RFPM)**

f) **25m Standard Pistol Men Malfunction Score Computation Form (Form STDP)**

g) **Dress/Advertising Code Violation Warning Form (Form DC)**

CamScanner

PROTEST FORM – PAGE 1

ISSF	**PROTEST FORM**	**P**

Protest Information (To Be Completed By Athlete or Team Official)
Event:
Protest to Jury:
Date and time of action or decision being protested.
Action or Decision Being Protested (describe in writing):
Reason for Protest (also list ISSF Rules concerned):
Protest Submitted By: *The personal data provided by you is only used for the processing of your Protest. By submitting the Protest, you confirm that you have read and understood the ISSF Data Protection Regulation as published in the „Rules“ section on www.issf-sports.org* Name and Signature
Protest RECEIPT (To Be Completed By Official Receiving Protest)
Protest received: Date: Time:
Amount Fee Paid: Received by:
Printed Name and Signature of official receiving protest:

CamScanner

PROTEST FORM – PAGE 2

JURY DECISION (TO BE COMPLETED BY JURY CHAIRMAN)
The Jury met on at to consider the protest.
Date: Time:
The protest was upheld o / denied o
Reason for Jury Decision:
Jury Chairman: Name and Signature
Notification to the Protester:
Date:
Time:
Fee retained / returned:

CamScanner

ISSF	APPEAL OF A JURY DECISION TO THE JURY OF APPEAL	AP

To Be Completed By Team Leader Or Representative

If there is continued disagreement with a Jury decision, the matter may be appealed to the Jury of Appeal. A copy of the previous Protest Form (P) must be attached.

Reason for Appeal:

Appeal Submitted By:
The personal data provided by you is only used for the processing of your Appeal. By submitting the Appeal, you confirm that you have read and understood the ISSF Data Protection Regulation as published in the "Rules" section on www.issf-sports.org

Name – Nation – Signature

Appeal information (To Be Completed By Official Receiving Appeal)

Appeal received: Date: Time:

Amount Fee Paid: Received by:

Printed Name and Signature of official receiving protest:

CamScanner

APPEAL FORM – PAGE 2

JURY OF APPEAL DECISION (TO BE COMPLETED BY JURY CHAIRMAN)
The Jury of Appeal met on at to consider the protest.
Date: Time:
The protest wasupheld upheld o / denied o
Reason for Jury of Appeal Decision:
Jury Chairman: Name and Signature
Notification to the Appellant:
Date:
Time:
Fee retained / returned:
Name and Signature
The decision of the Jury of Appeal is Final.

CamScanner

ISSF	RANGE INCIDENT REPORT FORM	IR

Incident Report Serial Number: (A record must be kept in Range Register)					
Date of Incident:		Time of Incident:			
Event:		Relay:		Firing Point:	
Athlete's Name:				Stage:	
Bib Number:		Nationality:		Series:	
Brief Details of Incident:					
Applicable ISSF Rules:					
Penalty imposed:					
Signature of Range Officer Initiating Report:		Printed Name:		Time:	
Signature of Competition Jury Member:		Printed Name:		Time:	
Signature of RTS Officer:		Printed Name:		Time:	
Signature of RTS Jury Member:		Printed Name:		Time:	
Signature of Ranking Technical Officer:		Printed Name:		Time:	
Score Amendment Reference:			Ref:		

NOTE: When completed by the Range Officer and Jury, a copy of this form must be sent to the Range (EST) Control Room immediately.

CamScanner

ISSF	RTS OFFICE SCORE NOTIFICATION FORM	CN

EVENT:		DATE:	
RELAY:		ELIMINATION / QUALIFICATION:	

PRELIMINARY RESULT POSTED BY (NAME):		TIME:	
PROTEST TIME ENDED AT:		TIME:	
THERE WERE NO PROTESTS (NAME):		RESULTS CONFIRMED:	
OR...			
PROTEST SUBMITTED (SEE ATTACHED PROTEST FORM)		TIME PROTEST RECEIVED:	
RESULTS NOT YET CONFIRMED			
SIGNATURE OF RTS OFFICER:		TIME:	
SIGNATURE OF RTS JURY MEMBER:		TIME:	
SIGNATURE OF RANKING TECHNICAL OFFICER:		REF:	

NOTE: When completed by the RTS Officer, a copy of this form must be sent to the Range (EST) Control Room immediately.

CamScanner

25m Rapid Fire Pistol Men Malfunction Score Computation

Form RFPM

Stage and Relay	/	Series and	1st / 2nd	Time of Malfunction	
		Time Stage	**8s / 6s / 4s**		
Firing Point Number		Athlete's Name			
Bib Number		Nationality		Date	

For ALLOWABLE malfunction insert "AM," for NON-ALLOWABLE insert "NAM 0," for UNFIRED SHOTS insert "0" – only for misses, or for shots not fired on each single target in both series:

Shot: / **Series:**	Left Monitor	Monitor	Middle Monitor	Monitor	Right Monitor	Total
Competition						
Malfunction Repetition						
Final Score						

(Final Score equals the total of the lowest value score in each column.)

If second part of a ten shot series, the total of the previous (first) five shots must be recorded; if not, leave blank.	Previous five shot score:		Correct ten shot score:	

Range Officer's Signature		Range Officer's Name (Printed)	
Range Jury Member's Signature		Range Jury Member's Name (Printed)	
RTS Officer's Signature		RTS Jury Member's Signature	
Confirmation of Manual Intervention of Computer Result at Ranking Computer		Technical Officer's Signature	
RTS Jury Member's Signature		Correction Reference Number	

NOTE: When completed by the Range Officer and Jury, a copy of this form must be sent to the Range (EST) Control Room immediately.

CamScanner

25m Standard Pistol Men Malfunction Score Computation

Form STDP

Relay	Series and	**1st / 2nd / 3rd / 4th**		Time of Malfunction	
	Time Stage	**150 / 20 / 10 sec**			
Firing Point Number		Athlete's Name			
Bib Number		Nationality		Date	

For ALLOWABLE malfunction insert "AM," for NON-ALLOWABLE insert "NAM 0," for UNFIRED SHOTS insert "0" – only for misses, or for shots not fired (by shot number) on the target in both series:

Shot: / Series:	**1**	**2**	**3**	**4**	**5**	**Total**
Competition						
Malfunction Repetition						
Final Score						

(Final Score is the total of the five lowest value shot-scores overall.)

If second part of a ten shot series, the total of the previous (first) five shots must be recorded; if not, leave blank.	**Previous five shot score:**		**Correct ten shot score:**	

Range Officer's Signature		Range Officer's Name (Printed)	
Range Jury Member's Signature		Range Jury Member's Name (Printed)	
RTS Officer's Signature		RTS Jury Member's Signature	
Confirmation of Manual Intervention of Computer Result at Ranking Computer		Technical Officer's Signature	
RTS Jury Member's Signature		Correction Reference Number	

NOTE: When completed by the Range Officer and Jury, a copy of this form must be sent to the Range (EST) Control Room immediately.

CamScanner

6.22 THE ISSF DRESS CODE

ISSF Rule General Technical Rule 6.7.5 states:

"It is the responsibility of athletes, coaches and officials to appear on the range dressed in a manner appropriate for a public sports event. Clothing worn by athletes and officials must comply with the ISSF Dress Code."

This Rule is the foundation of the ***ISSF Dress Code.***

6.22.1 GENERAL

All sports are concerned with the images they present to youth, the public and media. Olympic sports, in particular, are judged by whether their athletes, coaches and officials present professional images that demonstrate their best qualities. Shooting's ability to grow as a sport, to attract new participants and fans and to secure its status as an Olympic sport are affected by how its athletes and officials' dress. This ***ISSF Dress Code*** provides regulations and guidelines for the implementation of Rule 6.7.5.

6.22.2 DRESS REGULATIONS FOR ATHLETES

6.22.2.1 All clothing worn by athletes in Training, Eliminations, Qualifications and Finals must be clothing that is appropriate for wear by athletes in international-class sports competitions. Athletes' clothing must convey positive images of shooting athletes as Olympic sport athletes.

6.22.2.2 When they appear in competitions, Rifle, Pistol, Shotgun and Running Target athletes should wear sports-type clothing that incorporates or displays national, NOC or National Federation colours and emblems. Appropriate clothing for wear during competitions includes training suits, tracksuits or warm-up uniforms, etc. as issued by National Federations or NOCs.

6.22.2.3 Members of a team participating in a Team event should wear the same uniform reflecting the nation they represent.

6.22.2.4 During Victory Ceremonies or other ceremonies, athletes are required to be dressed in their official national uniform or national training suits. For teams, all members of the team must wear appropriate national uniforms. If an athlete reports for a Victory Ceremony without a national team uniform, a Jury member may delay the ceremony and require the athlete to change into appropriate clothing before the ceremony can proceed.

6.22.2.5 Rifle athletes' clothing must comply with Rifle Clothing Regulations described in Rule 7.5. If they do not wear special shooting trousers or shoes, the clothing worn during competitions must comply with this ISSF Dress Code.

6.22.2.6 During all Pistol training and competition, women are required to wear dresses, skirts, divided skirts, shorts or trousers, and blouses or tops (must cover the front and back of the body and be over each shoulder). Men are required to wear full-length trousers or shorts and long or short sleeved shirts. Athletes are not permitted to wear any form of performance enhancing clothing. All athlete clothing must comply with the ISSF Dress Code (Rule 6.7.5 and 6.22).

6.22.2.7 Shotgun athletes must comply with Shotgun Clothing Regulations described in Rule 9.13.1.

6.22.2.8 If shorts are worn during competitions, the bottom of the leg must be not more than 15cm above the centre of the knee cap. Skirts and dresses must also comply with this measurement.

CamScanner

6.22.3 **PROHIBITED ITEMS**

6.22.3.1 Prohibited clothing items for competitions and Victory Ceremonies include blue jeans. Also, jeans or similar trousers in colours not appropriate, camouflage clothing, sleeveless T-shirts, shorts that are too short (see 6.22.2.8), ragged cut-off shorts, trousers with patches or holes as well as shirts or trousers with non-sporting or inappropriate messages (see Rule 6.12.1, no propaganda is permitted). Sporting colours should be national uniform colours. If national colours are not worn, non- appropriate colours that must be avoided are camouflage, plaids, khaki, olive or brown.

6.22.3.2 Athletes may not wear sandals of any type or remove their shoes (with or without socks).

6.22.3.3 Changing clothes must be done in designated areas and not on the field of play. Changing on the firing points or in the ranges is not permitted.

6.22.3.4 All clothing must comply with ISSF Eligibility, Commercial Rights, Sponsorship and Advertising Rules regarding the display of manufacturer and sponsor marks. During the Olympic Games compliance with IOC Rule 50 is required.

6.22.4 **DRESS REGULATIONS FOR COACHES AND OFFICIALS**

6.22.4.1 The ISSF Dress Code applies to ISSF Jury Members and National Technical Officials including Range Officers and Shotgun Referees. The ISSF Dress Code also applies to coaches when they are working on the field of play during training, competitions or Finals.

6.22.4.2 Unless the organizer provides special official clothing, Jury members should wear dark trousers, or skirts, with light coloured shirts with collars and long or short sleeves. If, due to the climate, a warm sweater or jacket is necessary it should preferably be of a dark colour. In warm climates, lightweight trousers are recommended. Dark normal shoes or sporting shoes are recommended.

6.22.4.3 While on duty, Jury Members must wear the approved ISSF red Jury vests that are available from ISSF Headquarters.

6.22.4.4 While on duty, Shotgun Referees must wear the ISSF official blue Referee vests that are available from ISSF Headquarters.

6.22.4.5 Competition officials and coaches may not wear any prohibited clothing items that are described in paragraph 6.22.3 above.

CamScanner

6.22.5 **DRESS REGULATIONS FOR PHOTOGRAPHERS, COMMENTATORS AND TV CAMERA CREWS.**

6.22.5.1 Accredited photographers, Commentators and TV camera crews with access to the FOP must respect the ISSF Dress Code because they are working in the public view.

6.22.5.2 Photographers and TV cameramen should not wear sleeveless shirts, cut-offs, gym or running shorts. If they wear shorts, they must wear socks and shoes.

6.22.5.3 Photographers working on the FOP must wear the official POOL or NON-POOL PHOTOGRAPHER bib/vest that is issued by the ISSF. Photographer vests will bear the ISSF logo and may bear one sponsor logo not bigger than the ISSF logo. Photographer vests are numbered so photo coordinators or the ISSF Technical Delegate can identify photographers.

6.22.5.4 TV cameramen working on the field of play must wear the official TV CAMERAMAN bib/vest. These vests must bear the ISSF logo and have easily distinguishable numbers on the front and back of the bib vest so that TV cameramen can be identified.

6.22.5.5 Photographers and TV cameramen are not allowed to wear any other vest or jacket displaying advertising while working on the field of play.

6.22.6 **DRESS CODE ENFORCEMENT PROCEDURES**

6.22.6.1 ISSF Equipment Control, Rifle, Pistol and Shotgun Juries are responsible for enforcing ISSF Clothing Regulations and the ISSF Dress Code.

6.22.6.2 During ISSF Championships, ISSF Juries will issue written warnings with requests to correct clothing violations for first violations. Athletes who receive written warnings and do not correct clothing violations (change clothing) will be disqualified. Juries will normally give warnings during equipment inspection or training. Juries may allow an athlete to complete Pre-Event Training (Shotgun or 25m Pistol) before changing if sufficient time to change is not available. No athlete will be permitted to participate in a Qualification or Final competition or in a Victory Ceremony while wearing inappropriate or prohibited clothing.

6.22.6.3 Before and during the competitions, Juries must use the ISSF Dress/ Advertising Code Violation Warning Form (Form DC) to inform Dress or Advertising Code violators and to request corrective action.

CamScanner

ISSF	DRESS/ADVERTISING CODE VIOLATION WARNING	DC

Incident Report Number: (A record must be kept in Range Register)			
Date of Violation:		Time of Violation:	
Athlete's Name:			
Bib Number:		Nation:	

Description of Dress/Advertising Code Violation:
Corrective Action Required:

Signature of Jury Member:	Printed Name:	Time:

IMPORTANT: Athletes who receive a Dress/Advertising Code Violation Warning may be disqualified from a competition if the violation is not corrected.

CamScanner

6.23 INDEX

10m Air Pistol –Target	6.3.4.6
10m Air Rifle –Target	6.3.4.3
10m Air Rifle + Pistol Mixed Team Events	6.18
10m Events – Specific Rules for 10m Air Gun Events	6.11.2
10m Indoor Air Gun Ranges	6.4.3.3 c
10m Ranges – Firing Point Standards	6.4.10
10m Ranges – Light Measurements	6.4.14
10m Running Target – Electronic Scoring Targets	6.4.16.2
10m Running Target –Target	6.3.4.8
25m and 50m Indoor Ranges	6.4.3.3 d
25m and 50m Precision Pistol –Target	6.3.4.5
25m EST – Control Sheets	6.3.5.4
25m Events – Targets - RFP	6.3.4.4
25m Events – Targets - Precision	6.3.4.5
25m Exposure Times	6.4.12
25m Outdoor Ranges – Open to the Sky	6.4.3.3 g
25m Ranges – Dimension of Firing Points	6.4.11.7
25m Ranges – Equipment of Firing Points	6.4.11.10
25m Ranges – Screens between the Firing Points	6.4.11.8
25m Ranges – Sections (Groups)	6.4.11.3
25m Ranges – Firing Point Standards	6.4.11
25m Rapid Fire Pistol Event – Allocation of Firing Points	6.6.6.2
25m Rapid Fire Pistol Event – Groups of Targets	6.4.11.3
25m Rapid Fire Pistol Event –Target	6.3.4.4
25m Targets – Exposure Times	6.4.12
25m Targets – Letters on the Targets	6.4.3.6
25m Timing of Electronic Scoring Targets	6.4.13
300m Electronic Scoring Targets – Crossfires	6.11.6.9 c
300m Outdoor Ranges – Open to the Sky	6.4.3.3 e
300m Ranges - Firing Point Standards	6.4.8
300m Rifle –Target	6.3.4.1
50m Outdoor Ranges – Open to the Sky	6.4.3.3 f
50m Ranges - Firing Point Standards	6.4.9
50m Rifle –Target	6.3.4.2
50m Running Target –Target	6.3.4.7
Abbreviations used in Results Lists	6.14.4.2

CamScanner

Additional Sighting Shots – Malfunction	6.13.4
Aiming Exercises - 10m and 50m	6.11.1.1 f
Allocation of Firing Points – 10m Events	6.6.6 f / 6.6.6 g
Allocation of Firing Points – 25m Rapid Fire Pistol	6.6.6.2
Allocation of Firing Points – Basic Principles	6.6.6
Allocation of Firing Points – Eliminations Events on Outdoor Ranges	6.6.6.1
Allocation of Firing Points – Equal Conditions	6.6.6 c
Allocation of Firing Points – Range Constraints	6.6.6 b
Allocation of Firing Points – Running Target (Rule 10.7.3.1)	6.6.6.5
Allocation of Firing Points – Shotgun (Rule 9.11.2.3)	6.6.6.4
Allocation of Firing Points – Supervised by the Technical Delegate	6.6.6 a
Allocation of Firing Points – Teams – More than one Relay	6.6.6 g
Allowable Malfunctions	6.13.2.1
Alteration of a Gun or Equipment	6.7.9.4
Annulment of a Shot	6.11.6.9
Annulment of a Shot – The Athlete did not fire: Confirmed	6.11.6.9 a / 6.11.6.7
Annulment of a Shot – The Shot is reported by another Athlete	6.11.6.9 b
Appeals	6.16.6
Appeals – Post Competition Test DSQ	6.7.9.3
Application of ISSF Rules	6.1.2
Appropriate Dress for a Public Event – Clothing Regulations	6.7.5 / 6.20
Backing Cards and Control Sheets 50m / 300m	6.3.5.5
Backing Targets – 25m	6.3.5.3
Backing Targets – 50m/300m	6.3.5.2
Bib (Start) Numbers	6.7.7
Blinders	6.7.8
Camouflage Clothing	6.22.3.1
Cases for Guns	6.2.2.8
Ceremonies – Appearance of the Athletes	6.22.2.4
Championship Administration	6.6
Championship Program and Schedule	6.6.1
Changing from Sighting to MATCH Shots	6.10.4
Changing of Wind Flags before the Preparation Time	6.4.4.6
Changing or Refilling – Gas or Air Cylinder	6.11.2.3
Chief Range Officer – Duties and Functions	6.9.1
Chief RTS Officer – Duties and Functions	6.9.3
Clay Target Testing	6.3.6.1
Clay Targets	6.3.6

CamScanner

Clocks on the Ranges	6.4.3.5
Clothing and Equipment	6.7
Clothing Regulations – Appropriate Dress	6.7.5 / 6.20
Coaching during any Event	6.12.5
Commands LOAD / START - UNLOAD / STOP	6.2.3.1
Common Range Standards	6.4.3
Communication Services on the Range	6.4.2 q
Competition Officials	6.9
Competition Rules 10m/50m Rifle and Pistol Events	6.11.1
Complaint concerning Failure to register or display a Shot (EST)	6.10.8 / 6.10.9.3
Complaint during Sighting Shots	6.10.5
Complaint during Sighting Shots - Finals	6.17.1.8 a
Concealed Violation	6.12.6.1 b
Conduct of ISSF Championships	6.1.5
Control Sheets – 25m EST	6.3.5.4
Crossfires	6.11.6
Crossfires – 300m Electronic Scoring Targets	6.11.6.9 c
Crossfires – Annulment of a Shot	6.11.6.7 / 6.11.6.9
Crossfires – Determination of a confirmed Crossfire	6.11.6.4
Crossfires – Determination of a not-confirmed Crossfire	6.11.6.5
Crossfires – Disclaim a Crossfire	6.11.6.6
Crossfires – Not confirmed by the Range Officer	6.11.6.8
Crossfires – Scoring	6.11.6.1
Crossfires – Sighting Shot on a MATCH Target of another Athlete	6.11.6.3
Crossfires – Sighting Shot on a Sighting Target of another Athlete	6.11.6.2
Crossfires – The Athlete did not fire: confirmed by the Range Officer	6.11.6.7
Cylinder Validity Date	6.2.4.2 / 6.7.6.2 g
Decimal Scoring	6.3.3.1 / 6.3.3.2 / 6.3.3.3
Decisions – Jury	6.8.8 / 6.8.9
Decisions – Jury – Cases not covered by the ISSF Rules	6.8.13
Decisions of the RTS Jury	6.10.3.1 / 6.16.5
Deduction	6.12.6.2 b
Deduction from the Score	6.14.7
Deduction of Points – False Information	6.12.6.1 c
Deduction of Points – Release of Propellant prior to Preparation Time	6.11.2.1
Deduction of Points – Shot(s) before the Command START	6.11.1.1 i
Deductions – Too many Shots in Event or Position	6.11.5

CamScanner

Definitions and Abbreviations	P175/6
Delaying Start of Final	6.8.12
Deviations of Specifications	6.4.1.10
Disqualification	6.12.6.2 c
Disqualification – Physical Abuse of Official or Athlete	6.12.6.4
Disqualification –Serious Safety Violations	6.12.6.3
Disqualification in a Final	6.12.6.2 c / 6.17.1.13 h
Disturbances	6.11.7
Disturbing other Athletes	6.12.4
Double Trap Ranges – Separate Double Trap Ranges	6.4.19.4
Double Trap Ranges – Standards	6.4.19
Double Trap Ranges – Using a Trap Range	6.4.1.4
Drawing of Lots – Allocation of Firing Points	6.6.6
Dress Code	6.7.5 / 6.22
Dress Code – Prohibited Items	6.22.3
Dry Firing	6.2.4.1 / 6.11.1.1 f
Dry Firing – Definition	6.2.4.1
Duties and Function of the Jury	6.8
Eco-friendly Clay Targets	6.3.6
Electronic Devices	6.7.4.4 / 6.11.8 f
Electronic Scoring Targets – Checked by the Technical Delegate	6.3.2.8
Electronic Scoring Targets – Responsibility of the Athlete	6.10.4
Electronic Scoring Targets (EST)	6.3.2
Electronic Scoring Targets changing to MATCH by Range Officials	6.10.4 b
Eligibility of Athletes (Rule 4.1)	6.7.7.3
Elimination Events	6.6.6.1
Entries – Final Entries	6.6.4
Entry Status and Limits	6.6.1.3
Equipment and Competition Clothing	6.7
Equipment Control – Examination before using the Equipment	6.7.6.1
Equipment Control – Information for Athletes and Team Officials	6.7.6.2 a
Equipment Control – Instruments – Shoe Sole Flexibility Device	6.5.3
Equipment Control – Instruments – Stiffness Measurement Device	6.5.2
Equipment Control – Instruments – Thickness Measurement Device	6.5.1
Equipment Control – Instruments, Gauges	6.5
Equipment Control – Marking of Equipment and Guns	6.7.6.2 e
Equipment Control Procedures	6.7.6.2

CamScanner

Equipment Control – Register of Equipment	6.7.6.2 f
Equipment Control – Reinspection Fee	6.7.6.2 i
Equipment Control – Responsibility of the Athlete	6.7.2
Equipment Control – Supervision by the Jury	6.8.c
Equipment Control – Unfair Advantage over others	6.7.1
Equipment Control – Validity “one Time only” EC	6.7.6.2 e
Equipment Control in Interest of Safety	6.2.1.6
EST Score Protest	6.16.5.2
EST Technical Officers	6.10.1
Events Table	P178/9
Examination by the jury – Extra Shot when shot fails to register	6.10.9.3
Examination of Electronic Scoring Targets by Technical Delegate	6.3.2.8
Examination of Equipment, Guns, Positions during Competition	6.8.5
Extra Shot – Annulling of the last Shot fired (extra to the Competition)	6.10.9.3 d
Extra Shot – Directed to fire an aimed Shot	6.10.9.3
Extra Shot – Not registered and displayed on the Monitor	6.10.9.4
Extra Shot – Registered and displayed on the Monitor	6.10.9.3
Eye Protection	6.2.6
Failure of a single Target	6.10.9.2
Failure of all Targets on a Range	6.10.9.1
Failure of Electronic Scoring Target Systems 10m and 50m	6.10.9
Failure of the Paper or Rubber Band	6.10.6
False Information	6.12.6.1 c
Fees – Protest and Appeals	6.16.4
Finals – 25m RFP – Fires before green light	6.17.1.13 j
Finals – 25m Pistol Women – Fires before green light	6.17.1.13 j
Finals – Announcement of Official Results	6.17.1.14
Finals – Announcement of Scores – 10m Events	6.17.2 g / 6.17.2 h
Finals – Announcement of Scores – 25m Pistol	6.17.5 g
Finals – Announcement of Scores – 25m Rapid Fire Pistol	6.17.4 g
Finals – Athlete not reporting In Time: 2 Points DEDUCTION	6.17.1.3
Finals – Checking Athletes and Equipment before the Final	6.17.1.3
Finals – Coaching	6.17.1.13 n
Finals – Competition 25m Pistol	6.17.5
Finals – Competition 25m Rapid Fire Pistol	6.17.4
Finals – Commands – 10m Rifle and Pistol	6.17.2
Finals – Commands – 50m Rifle 3 Positions M and W	6.17.3
Finals – Competition Procedures	6.17.1.

CamScanner

Finals – Complaint during Sighting Shots	6.17.1.8 a
Finals – Decimal Scoring	6.3.3.3
Finals – Delay of a Final	6.8.12
Finals – Dry Firing prohibited	6.17.1.13 e
Finals – Equipment Tests before a Final	6.17.1.3
Finals – EST Complaint	6.17.1.8
Finals – Events-Programme 10m Air Rifle and 10m Air Pistol	6.17.2
Finals – Events-Programme 25m Pistol Women	6.17.5
Finals – Events-Programme 25m Rapid Fire Pistol Men	6.17.4
Finals – Events-Programme 50m Rifle 3 Positions Men and Women	6.17.3
Finals – Events-Programme Rifle and Pistol	6.17
Finals – Events-Programme Shotgun	9.18
Finals – Extra Shot fired	6.17.1.13 k
Finals – Failure of a single Target – during sighting	6.17.1.8 a
Finals – Failure of a single Target – during Final match	6.17.1.8 b
Finals – Failure of all Finals Targets	6.10.9.1
Finals – Failure of all Finals Targets – 10m and 50m Events	6.10.9
Finals – Failure of all Finals Targets – 25m Events	6.10.9
Finals – Final Official Results	6.17.1.14
Finals – Late Arrival	6.17.1.4
Finals – Malfunctions of a Gun 10m and 50m Final	6.17.1.6
Finals – Malfunctions of a Gun 25m RFP Final (Rule 8.9)	6.17.4 m
Finals – Malfunctions of a Gun 25m Pistol Women Final (Rule 8.9.1)	6.17.5 l
Finals – Number of finalists 10m/25m/50m Events	6.17.1.1
Finals – Officials	6.17.1.10
Finals – Pistol Support Stand	6.4.11.10.c
Finals – Preparation Time 10m	6.17.2 d
Finals – Preparation Time 25m Events	6.17.4 e / 6.17.5 e
Finals – Presentation of Finalists	6.17.1.12
Finals – Presentation of Medallists	6.17.1.14
Finals – Production and Music	6.17.1.11
Finals – Protests in Finals – Decisions	6.17.1.13
Finals – Protests in Finals – Score Protests	6.17.1.7
Finals – Qualification – Full Program	6.17.1.1
Finals – Range Equipment	6.17.1.9
Finals – Reporting to the Preparation Area	6.17.1.3
Finals – Rules and Procedures	6.17.1.13

CamScanner

Finals – Safety Flag	6.17.1.13 m / 6.2.2.2 a
Finals – Scoring	6.17.1.5
Finals – Pistol Support Stand	6.4.11.10
Finals – Shots fired before START or after STOP – 10m/25m/50m	6.17.1.13 h / 6.17.1.13 i
Finals – Sighting Commands 10m Rifle and Pistol	6.17.2 d
Finals – Sighting Commands 25m Pistol Women	6.17.5 e
Finals – Sighting Commands 25m Rapid Fire Pistol Men	6.17.4 e
Finals – Sighting Commands 50m Rifle 3 Positions	6.17.3 d
Finals – Starting Positions	6.17.1.2
Finals – Starting Time	6.17.1.3
Finals – Tied Scores 10m	6.17.2 j
Finals – Tied Scores 25m Pistol Women	6.17.5 i
Finals – Tied Scores 25m Rapid Fire Pistol Men	6.17.4 i
Finals – Tied Scores 50m 3 Positions	6.17.3 l
Finals Shotgun Start	-------
Finals – Disabled Shotgun	6.19.6
Finals – Facilities	6.19.3.5
Finals – Finalists Reporting to the Range	6.19.3.1
Finals – General Requirements	6.19.3
Finals – Late or Absent Athlete	6.19.3.1
Finals – Malfunctions of Shotgun or Ammunition	6.19.6
Finals – Music and Production	6.19.3.7
Finals – Number of Finalists in each Event	6.19.2.1
Finals – Number of Malfunctions	6.19.6 c
Finals – Officials	6.19.3.6
Finals – Order of Shooting	6.19.3.3
Finals – Procedures for conducting Finals	6.19.4
Finals – Production and Music	6.19.3.7
Finals – Protest during Finals	6.19.7
Finals – Range Special Equipment	6.19.3.5
Finals – Reporting Time	6.19.3.1
Finals – Scoreboard Pauses	6.19.5 g
Finals – Shoot-offs	6.19.4.3
Finals – Shotgun Events	6.19
Finals – Skeet	6.19.4.2
Finals – Starting Time	6.19.3.2
Finals – Test Firing	6.19.3.4

CamScanner

Finals – Tie-breaking (Shoot-off) Procedures	6.19.4.3
Finals – Trap	6.19.4.1
Finals Competition Procedures	6.19.4
Shotgun Finals finish	--------
Firing after the Command UNLOAD / STOP	6.2.3.5
Firing before the Command LOAD / START	6.2.3.5
Firing Line	6.4.3.2
Firing Line – Marking and Measurement	6.4.5.4
Firing Point Allocation	6.6.6
Firing Point Equipment - 25m Pistol Ranges	6.4.11.10
Firing Point – Equipment – General	6.4.7.2
Firing Point – Substances	6.11.8 b
Flash Photography when forbidden	6.11.8 g
Flash Targets	6.3.6.2
Forms	6.19
Formula for the Elimination Round	6.6.6.1 d
Function Firing Range	6.4.11.11
Gas / CO2 Cylinder – Athletes Responsibility – validity date	6.7.6.2 g / 6.2.4.2
Gas or Air Cylinder – Changing or Refilling	6.11.2.3
Gauges and Instruments	6.5
General and Administrative Facilities	6.4.2
General Firing Point Standards	6.4.7
General Target Requirements	6.3.1
General Target Standards	6.3
Gun Handling Rules	6.2.2
Handling of Guns – After STOP	6.2.3.6
Handling of Guns – Removing of Guns from the Firing Line	6.2.2.1
Handling of Guns	6.2.2
Hearing Protection	6.2.5
Height of Targets	6.4.6.1
Horizontal Variations for Firing Points	6.4.6.3
Horizontal Variations for Target Centres	6.4.6.2
Individual Ties	6.15.1
Indoor Range – Light Measuring	6.4.14.2 / 6.4.14.3
Indoor Range – Light Requirements (Lux)	6.4.14
Inspection of Ranges by the Technical Delegate	6.4.1.9
Interruptions	6.11.3
Irregular Shots 10m, 50m and 300m	6.11.5

CamScanner

Juries – Advising, Assisting and Supervising	6.8
Juries – Appointment of Juries	6.1.5.1
Juries – Competition Jury – Duties and Functions	6.8
Jury – Decisions	6.8.9
Jury – Decisions re Post-competition test failure	6.7.9.3
Jury – Examination and Check before the Competition	6.8.3
Jury – Majority present on the Range	6.8.8
Jury – Responsibilities	6.8
Jury – Supervising – Examination of Equipment, Guns, Positions	6.8.5 / 6.8.6
Jury – Time Extension by the Jury	6.11.3.2 b
Jury Members – Athletes or Team Officials	6.8.14
Jury Members must wear the Official ISSF Jury Red Vest	6.8.2
Knowledge of the Rules	6.1.2 e
Late Arrival of Athlete	6.11.4
Left-handed / Right-handed	6.1.2 g
Light Measuring on Indoor Ranges	6.4.14.2 / 6.4.14.3
Light Requirements on Indoor Ranges	6.4.14
Line of Targets – Parallel to Firing Line	6.4.3.2
Load - Definition	6.2.3.4
Load – More than one Pellet loaded	6.11.2.4
Loading of Guns	6.2.3.2
Loading of Guns – Using a Magazine – Rifle and 10/50m Pistol Events	6.2.3.3
Main Scoreboard	6.4.2 i
Malfunction – If Allowable, Additional Sighting Shots	6.13.4
Malfunctions	6.13
Malfunctions of Guns / Ammunition	6.13
Maximum Athlete Entry	6.6.1.4
Medal Ceremonies	6.17.6
Media Facilities	6.4.2 s
Men's Events / Women's Events	6.1.2 h
Miss – Not fired Shots	6.11.1.2 f
Mixed Team Events - 10m Rifle + Pistol	6.18
Mixed Team Skeet	6.20
Mobile Telephones	6.11.8 f / 6.7.4.4
Mobile Telephones – Notices Informing Restrictions	6.11.8 h
Monitor – Visibility	6.10.4 d
Move to a Reserve Position	6.10.9.2 a
Moving to another Firing Point	6.10.9.4

CamScanner

Music during Competitions	6.11.8 a
Non Allowable Malfunctions	6.13.2.2
Non Verbal Coaching	6.12.5.1
Not fired Shots	6.11.1.2 f
Notices Displayed	6.11.8 h
Not sign the Printer Record – Electronic Scoring Targets	6.10.4 g
Notification of Failure to register or display a Shot (EST)	6.10.9.3
Numbering of Target Frames and Firing Points	6.4.3.6
Numbering of Targets	6.4.3.6
Objective and Purpose of ISSF Rules	6.1.1
Official Championship Program	6.6.1.1
Official Schedule	6.6.1.2
Official Training	6.6.3.1
Officials, Athletes and Spectator Areas	6.4.1.5
Open Violation	6.12.6.1.a
Organization and Supervision of ISSF Championships	6.1.5
Organizing Committee and Appointments	6.1.5.2
Pellet – Load only one (1)	6.11.2.4 / 6.2.3.3
Penalties for Rule Violations	6.12.6
Penalty Cards	6.12.6.2 a / b / c / e
Physical Abuse of Official or Athlete	6.12.6.2.d / 6.12.6.4
Post Competition Testing	6.7.9
Pre-Event Training	6.6.3.2
Preliminary Scores	6.14.1
Preparation Time – Handling Guns, Dry Firing, Aiming Exercises	6.11.1.1.f
Preparation Time – Sighting Targets, Pre-Competition Checks	6.11.1.1.b / g
Presence of the Jury	6.8.8 / 6.8.15
Procedure for Examination of Electronic Scoring Targets	6.10.8
Propaganda	6.12.1
Protection against Rain, Sun, Wind	6.4.1.5
Protest concerning the Shot-Value on Electronic Scoring Targets	6.10.7
Protest Fees	6.16.4
Protest Time	6.16.5.1 / 6.16.3
Protests – Dealt by the Jury	6.8.11
Protests – Scoring Protests – RTS Jury	6.16.5
Protests – Verbal	6.16.2
Protests – Written Protests	6.16.3

CamScanner

Protests and Appeals	6.16
Put down a Gun	6.2.2.4
Questioned Shot – Scoring	6.10.9.3
Questioned Shot not located	6.10.9.3 e
Range Commands	6.2.3
Range Officer(s) – Duties and Functions	6.9.2
Range Officers – Knowledge and Enforcement of the ISSF Rules	6.1.2 e
Range Scoreboards	6.4.2 i
Ranges and Other Facilities	6.4
Ready to shoot – Athlete to report on time	6.12.4 a
Recognised Shooting Events	P177
Records	6.14.9
Release of Propellant Charge after MATCH Firing starts	6.11.2.2
Remaining Time	6.11.1.2 e
Repair or replace a Gun	6.13.3
Replace or repair a Gun – No extra Time, but additional Sighting Shots	6.13.4
Replacement of an Athlete in a Team Event	6.6.5 c
Responsibility of Range Officials LOAD / START - UNLOAD / STOP	6.2.3.1
Responsibility of the Athlete	6.12.4
Responsibility of the Athlete - Equipment	6.7.2
Result Distribution	6.14.3
Result List – Contents	6.14.4.1
Result Lists – Abbreviations	6.14.4.2
Result Lists – Produced by ISSF Headquarters	6.14.4
Resume Shooting after STOP	6.2.3.6
Right-handed / Left-handed	6.1.2 g
RTS Jury – Electronic Scoring Targets	6.10.3
RTS Jury – Supervision of Scoring	6.8 b / 6.10.3.1
RTS Officers – Duties and Functions	6.9.4
Rule Violations – Penalties	6.12.6.2
Rules for all Rifle and 10m and 50m Pistol Events	6.11.1
Rules of conduct for Athletes and Officials	6.12
Running Target – Allocation of Firing Points	6.6.6.5
Running Target – Athlete visible to the Spectators	6.4.15.4
Running Target – Dry Firing Position	6.4.15.5
Running Target – Run Times	6.4.15.8
Running Target – Width of the Shooting Station	6.4.15.5
Running Target Ranges - Standards	6.4.15

CamScanner

Running Target Ranges 10m	6.4.16.2
Running Target Ranges 50m	6.4.16.1
Safety	6.2
Safety Flags	6.2.2.2
Safety of Athletes, Range Officials, Spectators	6.2.1.3 / 6.2.2.3
Safety of Ranges	6.2.1.2
Safety Rules - General	6.2.1
Serious Safety Violations	6.12.6.3
Scope of Technical Rules	6.1.3
Scoring and Results Procedure	6.14
Scoring Protests	6.10.7 / 6.16.5
Scoring Protests – Electronic Scoring Targets	6.10.7
Scoring Protests – Electronic Scoring Targets: 2 Points DEDUCTION	6.16.5.2 c / 6.10.7 d
Shadow on Targets	6.4.3.1
Shoe Sole Flexibility Measuring Device	6.5.3
Shooting Distances	6.4.5
Shooting Distances - Measurement	6.4.5.1
Shooting Mats	6.4.7.2 b
Shooting Tables	6.4.7.1
Shot Fails to Register	6.10.9.3
Shot(s) after the Command STOP	6.11.1.3
Shot(s) before the Command START	6.11.1.1 i
Shotgun – Allocation of Firing Points (Rule 9.11.2.3)	6.6.6.4
Shotgun – Selection of Ranges and Rounds	6.6.6.4
Shotgun Venues - Standards	6.4.17
Shots out of the Area of the Control Sheet	6.3.5.5
Side Blinders	6.7.8.1
Side Blinders for Shotgun (Rule 9.13.4)	6.7.8.1
Sighters – Match Changing done by the Target Officer	6.11.1.1 k
Sighting Shots	6.11.1.1
Sighting Shots after the first Competition Shot	6.11.1.2 c
Sighting Shots before the first Competition Shot	6.11.1.1
Sign the Printer Record – Electronic Scoring Targets	6.10.4 f / 6.10.4 g
Skeet Mixed Team	6.20
Skeet Ranges – Standards	6.4.20
Skeet Ranges – Standards Range View	6.4.20.4
Smoking	6.11.8 e

CamScanner

Sound Producing Devices	6.7.4.3
Sound Reducing Devices	6.2.5
Special Devices – Clothing	6.7.4.2
Spectators Area	6.4.1.5 / 6.4.3.4
Spirit and Intent of the ISSF Rules	6.8.13
Standards for Running Target Ranges – General	6.4.15
Standards for Shotgun Ranges	6.4.17
Start Lists	6.6.5
Start of Match Firing	6.11.1.2
Stiffness Measuring Device	6.5.2
Stop Command	6.11.1.3
Stop Firing more than 3 Minutes	6.11.3.1
Stop Firing more than 5 Minutes or Moving to another Firing Point	6.11.3.2
Stop Shooting by Jury Member / Range Officer in Interest of Safety	6.2.1.5
Substances – Put on the Firing Point	6.11.8 b
Substitute Gun – Malfunction	6.13.3
Sun – Direction of Ranges	6.4.3.1
Systems of Targets	6.4.1.8
Tape on Firing Point	6.11.8 c
Target Centre Locations	6.4.6
Target Control Systems	6.3.5
Targeted Testing	6.7.9.4
Target Line	6.4.5.4
Target Officer – Electronic Scoring Targets	6.10.2
Targets and Target Standards	6.3
Team Leader – Responsibilities	6.12.3
Team Scores in 50m and 300m Eliminations Events	6.6.6.1 e / 6.6.6.1 f
Team Ties	6.15.5
Technical Delegate: Check of Electronic Scoring Targets	6.3.2.8
Technical Delegate: Report of World Records	6.14.9.5
Technical Delegate: Shotgun Events – Selection of Ranges / Rounds	6.6.6.4
Technical Delegate: Supervision – Allocation of Firing Points	6.6.6 a
Technical Meeting	6.6.2
Technical Officers – Electronic Scoring Targets	6.10.1
Thickness Measuring Device	6.5.1
Testing of Guns (Function Test)	6.4.11.11
Threat to the Safety of others on a Shooting Range	6.2.1.4
Tie-Breaking – Count back	6.15.1 b

CamScanner

Tie-Breaking – General	6.15
Tie-Breaking – Individuals	6.15.1
Tie-Breaking – Team Events	6.15.5
Ties in Olympic Events with Finals	6.15.4
Time Extension by the Jury – Marking on the Incident Report	6.11.3.2 b
Time Extension by the Jury – Moving to another Firing Point	6.11.3.2
Time Extension by the Jury – Stop Firing more than 5 Minutes	6.11.3.2
Timing Running Target	6.4.15.8
Too many Shots in an Event or Position	6.11.5
Training – General	6.6.3
Transfer the Values of excessive Shots – Count back Situation	6.11.5
Trap and Double Trap Pit Section	6.4.18.5
Trap Ranges – Standards	6.4.18
Trap Ranges – Target Throwing Machines	6.4.18.3
Unfair Advantage over others	6.7.1 / 6.1.4
Unofficial Training	6.6.3.3
Unsportsmanlike Behaviour	6.12.6.2 d
Verbal Protests	6.16.2
Verifying the Safety of Guns	6.2.2.4
Violation of Safety Rules in a Dangerous Manner	6.12.6.3
Violations – Concealed	6.12.6.1 b
Violations – Open	6.12.6.1 a
Warning	6.12.6.2 a
Wind Flags 50m / 300m	6.4.4
Wind Flags 50m / 300m Check before the Preparation Time	6.4.4.6
Women’s Events / Men’s Events	6.1.2 h
World Records	6.14.9
World Records – Juniors	6.14.9.2
World Records – Verification	6.14.9.4
Wrist Worn Devices	6.7.4.4
Written Protests	6.16.3
Written Protests – Decision forwarded to the ISSF Headquarters	6.16.7

CamScanner

ANNEX – RULES FOR PAPER TARGET SCORING

Introduction:

Starting with the 2017-2020 ISSF Rules, ISSF rules for paper target scoring were removed from the ***ISSF General and Special Technical Rules*** and consolidated in this Annex A to the ***ISSF General Technical Regulations***. The Olympic Games shooting events and all ISSF World Championships, World Cups and Junior World Cups must now be conducted on electronic scoring targets, but the ISSF recognizes that some Continental Championships and many national, regional and club level competitions continue to use paper targets. These ***Rules for Paper Target Scoring*** are valid for governing competitions that use paper target scoring. Other ISSF Rules, as appropriate, must be used to govern all other competition operations.

1 PAPER TARGETS AND SCORING GAUGES

1.1 **Official ISSF Targets**

1.1.1 The target and scoring ring dimensions and specifications for all ISSF approved targets shall be as described in Rule 6.3.4.

1.1.2 Targets are divided into scoring zones by scoring rings. The dimensions of all scoring rings are measured from the outside edges (outside diameter) of the scoring rings.

1.1.3 In ISSF Championships, only targets with one (1) black aiming area are permitted, except for Running Target.

1.1.4 Sighting targets must be marked clearly with a black diagonal stripe in the upper right hand corner of the target. The stripe must be clearly visible to the naked eye at the appropriate distance under normal light conditions (except for the 25m Rapid Fire Pistol Target and the 50m Running Target).

1.2 **Target Testing Requirements (applies only to ISSF Championships)**

1.2.1 Samples of all paper targets (5 of each type) that are to be used in ISSF Championships must be submitted to the ISSF Secretary General for testing, verification of specifications and approval at least six (6) months prior to each Championship.

1.2.2 **The quality and dimensions** of all targets must be examined again by the Technical Delegate(s) prior to the beginning of the Championship. Only targets that are the same as the approved samples may be used.

1.3 **Target Scoring**

1.3.1 Targets must be scored with scoring gauges that comply with Rule 1.4 (below) or with ISSF approved electronic scoring systems.

1.3.2 Rifle and Pistol targets may be scored in full ring values or if approved electronic scoring system are used, in decimal ring values. Decimal ring scores are determined by dividing the scoring area for one full ring into ten equal scoring rings that are designated with decimal values starting with zero (i.e. 10.0, 9.0, etc.) and ending with nine (i. e. 10.9, 9.9, etc.);

1.3.3 **Target paper** must have a non-reflecting colour and surface that makes the black aiming area (centre) clearly visible at appropriate distances under normal

CamScanner

light conditions. The target paper and scoring rings must retain dimensional accuracy under all weather and climatic conditions. The target paper must register shot holes without excessive tearing or distortion.

1.4 Scoring Gauges and Their Use

When paper targets are used, ISSF approved electronic scoring systems or scoring gauges must be used to score doubtful shot holes. Scoring gauges must comply with the following requirements:

1.4.1 25m Centre Fire Pistol

Measuring edge diameter:	9.65mm (+0.05/-0.00mm)
Edge thickness:	0.50mm approximately
Spindle diameter:	According to the calibre being used
Spindle length:	10mm to 15mm
To be used for:	Centre Fire Pistol events

1.4.2 300m Rifle

Measuring edge diameter:	8.00mm (+0.05/-0.00mm)
Edge thickness:	0.50mm approximately
Spindle diameter:	According to the calibre being used
Spindle length:	10mm to 15mm
To be used for:	300m Rifle events

1.4.3 Small bore Rifle and Pistol 5.6mm (.22”)

Measuring edge diameter:	5.60mm (+0.05/-0.00 mm)
Edge thickness:	0.50mm approximately
Spindle diameter:	5.00mm (+0.05mm)
Spindle length:	10mm to 15mm
To be used for:	All events using 5.6mm ammunition

1.4.4 4.5 mm INWARD Gauges

Measuring edge diameter:	4.50mm (+0.05/-0.00mm)
Edge thickness:	0.50mm approximately
Spindle diameter:	Measuring edge diameter minus 0.02mm (4.48mm)
Spindle length:	10mm to 15mm
To be used for:	Measuring the 1 and 2 rings of Air Rifle and 10m Running Targets. Measuring the 1 ring of Air Pistol Targets.

CamScanner

1.4.5 Use of the Air Pistol OUTWARD scoring gauge for scoring Air Rifle Inner tens

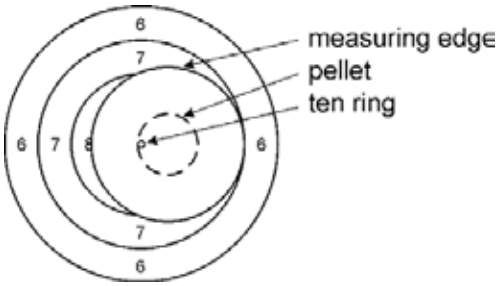	If the measuring edge of an Air Pistol Outward scoring gauge does not extend outside the 7 ring of an Air Rifle target, then the shot value is an inner ten.

1.4.6 Use of the Air Pistol INNER TEN OUTWARD scoring gauge for scoring Air Pistol Inner tens

Measuring edge diameter:	18.0mm (+0.00/-0.05mm)
Edge thickness:	0.50mm approximately
Spindle diameter:	4.60mm (+0.05mm)
Spindle length:	10mm to 15mm
To be used for:	Measuring the inner tens of Air Pistol
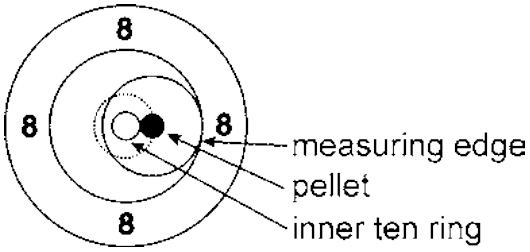	If the measuring edge of an Air Pistol Inner Ten Outward scoring gauge does not extend outside the 9 ring of an Air Pistol target then the shot value is an inner ten.

1.4.7 4.5mm OUTWARD Gauge for 10m Air Rifle and 10m Running Target

Measuring edge diameter:	5.50mm (+0.00/-0.05mm)
Edge thickness:	0.50mm approximately
Spindle diameter:	4.60mm (+0.05mm)
Spindle length:	10mm to 15mm
To be used for:	10m Air Rifle and 10m Running Target, rings 3 to 10. Also the Running Target Inner Ten.

CamScanner

1.4.8 Use of the Air Rifle OUTWARD scoring gauge

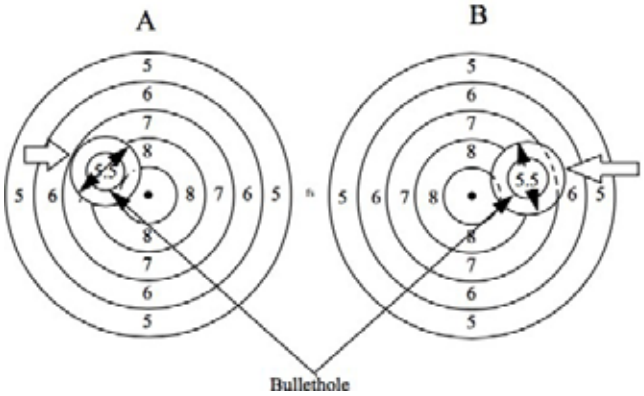

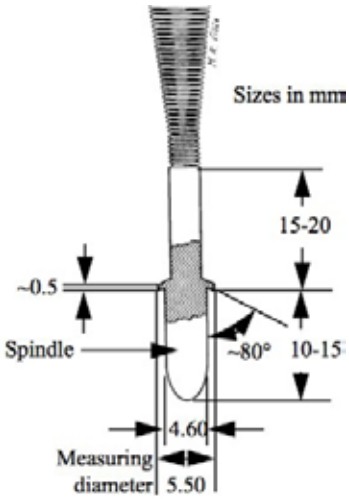

Illustration “A” depicts a doubtful shot hole. The outward scoring gauge shows the outside edge of the flange lying within the 7 ring; therefore the shot is scored a 9.

Illustration “B” depicts a doubtful shot hole. The outward scoring gauge shows the outside edge of the flange lying over the 7 ring and into the 6 zone; therefore the shot is an 8.

1.4.9 4.5mm OUTWARD Gauge for 10m Air Pistol

Measuring edge diameter:	11.50mm (+0.00/-0.05mm)
Edge thickness:	0.50mm approximately
Spindle diameter:	4.60mm (+0.05mm)
Spindle length:	10mm to 15mm
To be used for:	10m Air Pistol, rings 2 to 10.

CamScanner

1.4.10 **Use of Air Pistol OUTWARD scoring gauge**

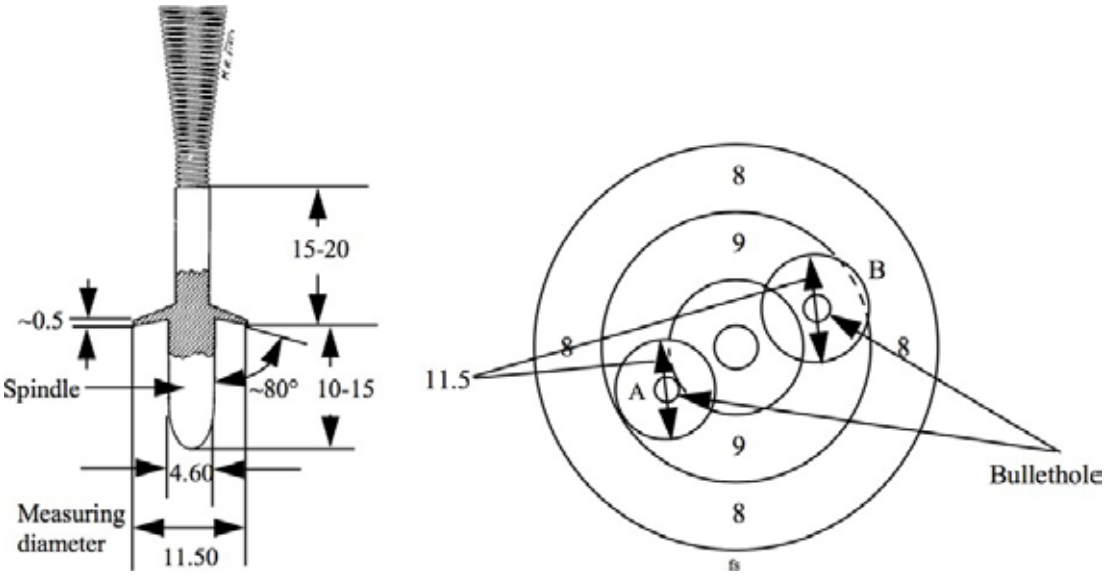

Illustration “A” depicts a doubtful shot hole with the outward scoring gauge in place. The outside edge of the flange is within the 9 ring; therefore the shot is scored a 10.

Illustration “B” depicts a doubtful shot hole with the outward scoring gauge in place. The outside edge of the flange is lying over the 9 ring line and into the 8 zone; therefore the shot is scored a 9.

1.4.11 **Skid Gauge**

The Skid Gauge is of flat, transparent plastic with two parallel lines marked on one side.

a) For 25m Centre Fire Pistol (9.65mm) the lines are 11.00mm (+0.05mm - 0.00mm) apart measured between the inside edges; and

b) For Small Bore Competitions (5.6mm) the lines are 7.00mm (+0.05mm – 0.00mm) apart measured between the inside edges. (To be used for 25m 5.6mm Pistol events).

CamScanner

2 RANGE AND FIRING POINT EQUIPMENT

2.1 Backing Targets

Backing targets must be used with 50m and 300m targets in accordance with

6.3.5.2. The area immediately behind the targets must be covered by Control Sheets. New Control Sheets must be provided for each athlete for each stage.

2.2 Backing Targets for 25m

a) Backing Targets must be used for all 25m Pistol events to assist in the identification of shots that may have missed the targets;

b) Backing Targets must, at a minimum, cover the entire width and height of the 25m frames (5 targets). They should be located a uniform distance of one

(1) meter behind the competition targets. They must be continuous, or on adjoining frames, without any spaces between them, to register any shots between competition targets;

c) Backing Targets must be made of non-reflecting paper of a neutral colour similar to the colour of the target; and

d) For 25m events, new Backing Targets must be provided for each athlete for each stage.

2.3 Target Changing Systems

2.3.1 10m ranges must be equipped with target carriers or target changing systems that allow targets to be changed after each shot.

2.3.2 50m ranges must be equipped with target changing boxes, carriers or pit systems that allow targets to be changed after every shot.

2.3.3 300m ranges must be equipped with target carriers that allow targets to be pulled and marked after each shot.

2.4 Firing Point Requirements if Register Keepers are Used

2.4.1 A desk, chair and spotting telescope must be provided.

2.4.2 A scoreboard, approximately 50cm x 50cm, on which the Register Keeper can post unofficial scores for spectators should be provided. The scoreboard should be located so that it may easily be seen by spectators, but does not obscure their views of the athletes.

2.5 Standards for 25m Turning Target Installations

Target frames for the 25m Rapid Fire Pistol event must be placed in groups of five (5), all at the same height (+1cm), all functioning simultaneously and all facing one firing point which is centred on the middle target of the group. The distance between target centres, axis to axis, in a group of five (5) must be 75cm (+1cm).

CamScanner

2.5.1 Ranges must be equipped with target rotating or turning mechanisms that permit 90 degree (±10 degrees) turning of the targets on their vertical axis. In precision stages of 25m Pistol events, stationary target frames may be used.

a) The time for turning to face the athlete must not exceed 0.3 seconds;

b) When the targets turn, there must be no visible vibration to distract the athlete; and

c) When viewed from above, the targets must turn in a clockwise direction to the facing position and in a counter clockwise direction to the edge-on position.

Rotation of Turning Targets

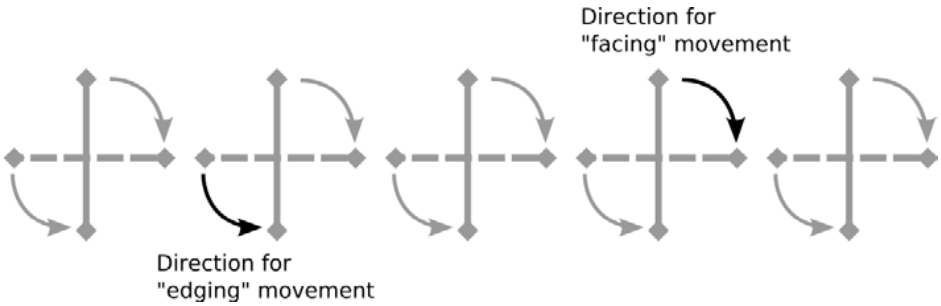

d) The targets in a section must all turn simultaneously which must be achieved by use of a mechanism that provides efficient operation and accurate timing.

2.5.2 The automatic turning and timing device must ensure, accurate and consistent timing and that targets remain in the facing position for the specified period of time and that targets return to the edge-on position after the specified time (+0.2 seconds – 0.0 seconds).

a) Timing must start the moment the targets begin to face and stop the moment they begin to turn away; and

b) If the time is less than specified or greater than 0.2sec, the Range Officer, acting either on his own or on instructions from a Jury Member, must stop the shooting to allow the timing mechanism to be regulated. In such cases, the Jury may postpone the start or restart of shooting.

2.5.3 Facing times for 25m Pistol Qualification Events are:

a) 25m Rapid Fire Pistol: 8, 6 and 4 seconds;

b) 25m Standard Pistol: 150, 20 and 10 seconds;

c) 25m Pistol and 25m Centre Fire Pistol Rapid Fire Stage: Facing for three (3) seconds for each shot, alternating with an edge-on face away time of seven

(7) seconds (±0.1 second); and

d) For all facing times, a tolerance of +0.2 seconds – 0.0 seconds is allowed.

2.5.4 If solid backing boards are used for the targets, the area corresponding to the eight (8) ring zone must either be cut out from the backing board or be made of cardboard to facilitate scoring.

CamScanner

3 COMPETITION OFFICIALS DUTIES

3.1 Jury Member Duties – 25m Events Only

a) For 25m events when using paper targets, a Member of the RTS Jury and/ or the Pistol Jury must be appointed for each Range Section or for each five (5) to ten (10) targets (i.e. one per Target Officer). He must accompany the Target Officer at the Target Line;

b) The Jury Member must check that the targets are inspected before scoring commences, looking for the correct number of shots, proximity to the scoring lines, etc. Doubtful situations must be resolved before scoring commences;

c) Decisions on doubtful shots must be made simultaneously by two (2) Jury Members and the Target Officer. One member of the Jury will act as chairman and will insert the scoring gauge, if necessary;

d) The Jury Member at the Target Line must ensure that all results recorded by the Second Register Keeper at the Target Line are correct and that Jury decisions are duly noted and certified on the score cards; and

e) The Jury Member must ensure that the targets are not patched, and shots are not indicated by the coloured discs until after doubtful shots have been resolved and the score has been recorded correctly by the Second Register Keeper.

3.2 Register Keeper Duties and Functions

When paper targets are used, a Register Keeper may be appointed for each firing point. Register Keepers must:

a) Fill out or verify the corresponding information on the scorecard and scoreboard, (athlete's name, Bib Number, firing point number, etc.);

b) Have a telescope if remote operated target changing is used. If the Register Keeper controls the target changing, he must wait a few seconds before signalling to change the target, in order to give the athlete the opportunity to spot his shot;

c) Enter the preliminary value of every shot on the scorecard and on the scoreboard above or beside his desk for the benefit of the spectators; and

d) On ranges where the targets are returned mechanically to the firing line, collect the targets immediately after each series of ten (10) shots and place them in a locked container to be collected by authorized personnel for delivery to the RTS Office.

3.3 Target and Pit Officers Duties and Functions – 50m and 300m

a) The number of Pit Officers should correspond to the number of Range Officers. In pit operations, they are responsible for their assigned Range Section or group of targets to ensure that targets are changed rapidly, scored, marked and raised for the athlete's next shot. Pit Officers must:

b) Ensure that there are no shot holes on the white surface of the target, and that any shot marks on the frame are clearly marked;

c) If a shot hole cannot be located on a target, the Pit Officer is responsible for determining whether the shot hole is on a neighbouring target and, in consultation with the Jury and Range Officer, for resolving the situation;

d) When automatic target boxes are used, Pit Officers are responsible for loading the correct targets in the boxes, for removing the targets and preparing

CamScanner

them for delivery to the Scoring and Results Office; and

e) They are also responsible for marking on the targets any irregularities that may have occurred.

3.4 25m Target Officer

A Target Officer must be appointed for each Range Section or for each five (5) to ten (10) targets. The number of Target Officers must correspond to the number of Range Officers. The Target Officer must:

a) Be responsible for the group of targets entrusted to him;

b) Must call all hits of doubtful value to the attention of the Jury Member and, after a decision is made, must signal the location and value of shots;

c) Ensure that targets are scored rapidly, accurately and efficiently marked, patched and/or changed, as necessary and as required by the Rules; and

d) Assist in the resolution of doubtful situations according to ISSF Rules in co-ordination with the Range Officer and the Jury.

3.5 Second 25m Register Keeper – Paper Targets

All stages of all the 25m events are scored officially on the range. The Second Register Keeper is at the target line. He must record scores on scorecards as called by the Target Officer. If there is a difference between the score marked by the Register Keeper and the Second Register Keeper that cannot be resolved, the score recorded by the Second Register Keeper will be valid.

3.6 25m Target Marker – Paper Targets

After scoring is completed, the Target Marker will patch the holes on the target, Control Sheets, and Backing Targets, or change the targets or Control Sheets as directed.

4 COMPETITION PROCEDURES

4.1 Handling 10m Air Rifle and Air Pistol Paper Targets

a) Changing targets is done by the athletes under the supervision of the Range Officers;

b) The athlete is responsible for shooting on the correct targets; and

c) Immediately after each series of ten (10) shots, the athlete must put the ten (10) targets in a convenient place for the Register Keeper who must put them in a secure container to be collected by authorized personnel for delivery to the RTS office.

4.2 Handling 50m Rifle and 50m Pistol Paper Targets

a) If **automatic target carriers** or changers are used, the athlete may control target changing or target changing may be controlled by the Register Keeper;

b) In either case, the athlete is responsible for shooting on the correct target; and

c) If the athlete considers the **marking or target changing to be too slow**, he may report this to a Range Officer. If the Range Officer or the Jury considers the claim justified, they must correct the situation. If the athlete or a team official considers there is no improvement, the athlete or a team official may protest to the Jury. The Jury may grant a time extension up to a maximum of

CamScanner

10 minutes. Such claims cannot be made in the last 30 minutes of MATCH firing except in unusual circumstances.

4.3 **Too many shots per paper target**

a) If an athlete fires **more shots** at one of his MATCH targets than are provided for in the event, he must not be penalized for the first two (2) shots;

b) For the third and all succeeding such misplaced shots he must be penalized by a deduction of two (2) points for the third and subsequent misplaced shots in that event;

c) The two (2) point deduction must be taken from the series in which the third or any subsequent misplaced shots occur. He must also fire a fewer number of shots at the remaining targets so that the number of shots does not exceed that provided for in the program;

d) The scoring process in this situation requires the transfer of the value of the excessive shot(s) to targets with less than the originally programmed number of shots, thus bringing each target to the full number of shots designated in the program and the Rules;

e) If the actual shot(s) to be transferred cannot be clearly established, the shot(s) with the lowest value must be transferred forward to the next target(s) or the shot(s) with the highest value must be transferred back to the previous target(s) so that the athlete will gain no advantage in a “count back” situation; and

f) All Three-Position Rifle events are considered to be one (1) event.

4.4 **When Sighting Shots Are Authorised.** When sighting shots are authorized during a competition because an athlete is interrupted or moved to another firing point and the use of automatic paper target systems makes it impossible to provide a new sighting target, the sighting shots should be fired on the next unused competition target. Two (2) competition shots should be fired at the next competition targets according to the instructions given by the Range Officer or Jury Members;

5 SCORING PROCEDURES

5.1 RTS Office Scoring

When paper targets are used for the following events, those targets must be scored in the RTS Office:

a) 10m, 50m and 300m Rifle events;

b) 10m and 50m Pistol events;

c) 10m and 50m Running Target events; and

d) All results in these events or stages that are scored at the shooting range are considered preliminary results.

5.1.1 The **RTS Jury** must supervise the scoring and all work done in the Scoring and Results Office and, when paper targets are used, on the 25 metre target line. It directs how questionable shots are scored, determines their value, and resolves any questions or scoring protests.

5.1.2 All targets for events to be scored in the RTS Office must be transported in a locked container from the target line to the RTS Office under suitable security immediately after they have been fired.

CamScanner

5.1.3 Competition targets for events that are scored in the RTS Office must be numbered and must agree with the scorecard. The RTS Office is responsible for the correct numbering of the targets and must verify the targets prior to every event before they are released to the Chief Range Officer or other range officials.

5.1.4 In the RTS Office, the following scoring procedures must be checked by a second official:

a) Determining the value of individual shots;

b) Determining and counting inner tens;

c) Adding shot values or points to be deducted;

d) Adding the individual series and overall total; and

e) Each official must certify his work by initialling the target, scorecard or results list.

5.2 **Determining Shot Values – Paper Targets**

5.2.1 All shot holes are scored according to the highest value of any target scoring zone or ring that is hit or touched by that bullet hole. If any part of a higher value scoring ring is touched by a bullet hole, the shot must be scored the higher value of the two scoring zones. This is determined by whether the bullet hole or a plug gauge inserted in the hole touches any part of the outside edge of the scoring ring.

An exception to this Rule is the scoring of inner tens on the Air Rifle target.

5.2.2 Shots in dispute must be determined as to value by means of a gauge or other device. Gauges must always be inserted into the shot hole with the target in a horizontal position.

5.2.3 When the accurate use of the scoring gauge is made difficult by the close proximity of another bullet hole, a badly torn bullet hole or overlapping bullet holes, the shot value must be determined by using a flat, transparent material (overlay) with an engraved ring of the appropriate size on it. Such a scoring gauge will aid in reconstructing the true position of a bullet hole and scoring ring.

5.2.4 If two scoring officials do not agree on the value of a shot, a decision from the Jury must be requested immediately.

5.2.5 The scoring gauge may be inserted only once in any bullet hole and only by a Jury Member. For this reason, the use of a gauge must be marked on the target by the scoring officials, together with their initials, and showing the result.

CamScanner

5.3 **25m Paper Targets Scoring Procedures**

The Jury must supervise all scoring procedures. The scorecard (kept by the Second Register Keeper) must be signed by the Target Officer and the Target Line Jury Member. This original card must be sent to the RTS Office by a secure means, for verification of addition and final recording.

5.3.1 **Skid Shots**

a) Shots fired while the target is in motion must not be scored as hits unless the greatest horizontal dimension of the bullet hole (surface lead/bullet marking on the target is ignored) is less than 7.0 mm in the 25m rimfire 5.6 mm (.22" cal.) events, or 11.0 mm in the 25m Centre Fire Pistol event; and

b) The horizontally elongated bullet hole in the target must be measured with a skid gauge. When the inside edge of the engraved lines on the skid gauge touches a scoring ring, the score will count as the higher value of the two zones.

5.3.2 As soon as the Target Officer receives the signal that the range is safe, the targets must be faced. The Target Officer, along with at least one Jury Member, must signal the values of the bullet holes on each target and call them loudly to the Register Keeper on the firing line. The Register Keeper records them on the Range Register and/or on the small scoreboard near his desk. The Second Register Keeper must accompany the Target Officer and record the shot values on a scorecard. The position and value of the shot on the target must be indicated to the athlete and spectators as follows:

a) By using coloured spotting discs in the 25m Rapid Fire Pistol event: These discs should have a diameter of 30 mm to 50 mm. They must be coloured red on one side and white on the other. They should have a spindle through the centre of the disc extending on both sides of approximately 5 mm diameter and 30 mm in length. After every five (5) shot series, and after the value of the shots has been decided and called, the discs must be placed in the bullet holes by the Target Officer;

b) A ten must be indicated with the red side facing the athlete. Values less than ten must be indicated with the white side facing the athlete. After the hits have been indicated in this manner, the total result for the series must be shown the small scoreboard near his desk, and recorded by the Second Register Keeper. The series total must also be announced. The discs must then be removed and the targets patched;

c) In the 25m Standard Pistol, 25m Pistol and 25m Centre Fire Pistol events, shot values and locations are indicated by means of a wand with a handle approximately 300 mm long and with a small disc on one end with a diameter of 30 mm to 50 mm, coloured red on one side and white on the other. The disc must be placed over the bullet hole(s) in the ten ring with the red side facing the athlete, as the Target Officer calls the value of the hit(s). For bullet holes with a value less than ten, the white side must be shown. Where a series of shots are fired at the same target, the scores should be called commencing with the tens. The total for the series should be called after all shots have been indicated individually; and

d) Sighting shots must be indicated and recorded.

CamScanner

5.3.3 The Target Officer and the Range Officer must verify that the results on the scoreboard are the same as recorded at the Target Line. Should there be any difference of opinion regarding the recording of a shot value, the matter must be resolved immediately.

5.3.4 As soon as shots are indicated and recorded:

a) The targets must be patched and made ready for the next series (Rapid Fire Pistol event and Rapid Fire Stages); or

b) The targets must be replaced and the Backing Targets patched or replaced for the next series; or

c) The targets and Backing Targets must be removed and replaced with new targets for the next athlete.

5.3.5 Before leaving the range, the athlete should sign the completed scorecard next to the score total to identify his score.

5.4 **Tie-Breaking**

Tie breaking shall be done according to GTR 6.15

5.5 **Paper Target Score Protests**

5.5.1 When using paper targets, an athlete or team official who considers that a shot was scored or recorded incorrectly may protest that score, except that decisions made regarding the value of shots by using gauges are final and cannot be protested. A protest can only be made for one specific shot. Should other shots be protested, a separate fee is payable.

5.5.2 Scoring protests may only be made on scores that have been decided without using a gauge or when incorrect entries in the result list or score card appear to have been made.

5.5.3 The protest fee (50,00 EUR) must be paid when the protest is made.

5.5.4 When paper targets are used and scored in the RTS Office, the team official or athlete has a right to see the protested shot hole(s), but is not permitted to touch the target(s).

CamScanner

6 300M SCORING AND MARKING PROCEDURES

6.1 As soon as the Target Marker receives a signal that a shot has been fired on that target, he must indicate the shot. The **indication of shots** must be carried out in accordance with the following system. As soon as the Marker in the pit receives a signal for marking, he must:

a) **Lower** the target;

b) **Cover the hole with a transparent sticker and overlay a contrasting** sticker to mark the location of the last shot;

c) **Raise the target; and**

d) **Show** the value of the hit by the discing system.

6.2 When a spotting disc is used to indicate shot values, it must be done with a circular disc 200 mm to 500 mm in diameter. It is painted black on one side and white on the other and mounted on a thin staff which is normally fastened on the white side 30 mm to 50 mm to the right of the centre.

6.3 The **value** of hits will be shown as follows (see diagram):

a) The position of the last **hit** must be marked;

b) The value of hits scoring 1, 2, 3, 4, 5, 6, 7 or 8 points must be shown by placing the disc, **black side toward the firing lin**e, on the appropriate spot on the target frame in the raised position as shown in the following figure;

c) If the **hit is a nine,** the disc must be moved up and down twice over the black aiming bulls-eye on the target with the white side of the disc facing the firing line;

d) If the **hit is a ten**, the disc, with the white side facing the firing line, must be moved twice in a clockwise circle in front of the black aiming mark, as shown in the following figure;

e) A shot that does **not hit the target** is marked only by moving the black side of the marking disc three (3) or four (4) times sideways across the face of the target; and

f) If the hit is on the target card, but **not in the scoring area**, it is marked by first indicating a miss and then by showing the position of the hit.

CamScanner

6.4 **Shot Signal Diagram**

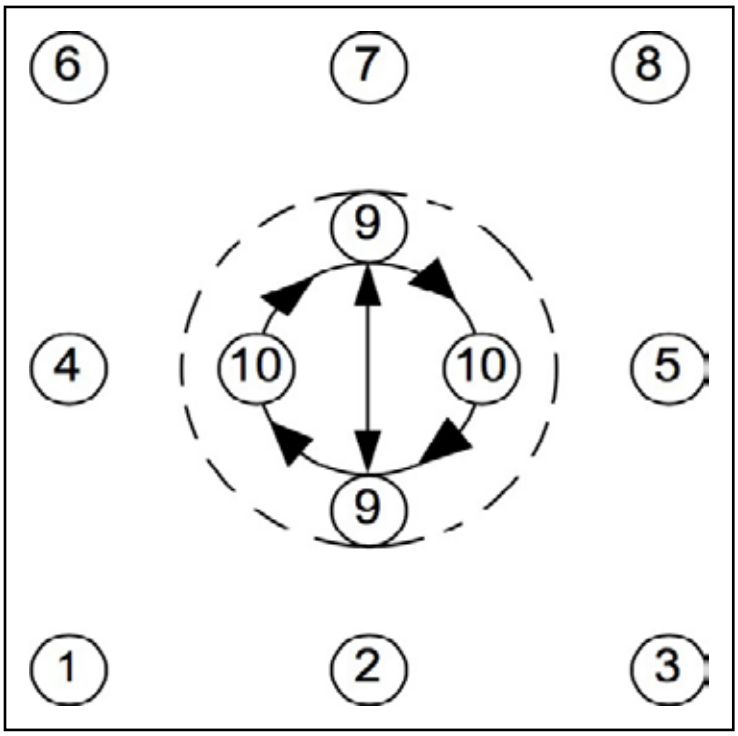

6.5 The sighting target must be marked clearly with a black diagonal stripe on the upper right-hand corner of the target. The stripe must be clearly visible to the naked eye at the appropriate distance in normal light conditions. In the case of pit operated targets, the sighting target must not appear at all while the athlete is firing MATCH shots.

CamScanner

MEGA link

ELECTRONIC SCORING SYSTEMS

CamScanner

GEHMANN

CamScanner

7
RIFLE RULES

FOR

10m Air Rifle Individual

10m Air Rifle Mixed Team

50m Rifle

300m Rifle

300m Standard Rifle

CamScanner

7.1 **GENERAL** 337
7.2 **SAFETY** 337
7.3 **RANGE AND TARGET STANDARDS** 337
7.4 **RIFLES AND AMMUNITION** 337
7.5 **CLOTHING REGULATIONS** 345
7.6 **SHOOTING EVENT PROCEDURES AND COMPETITION RULES** 353
7.7 **RIFLE EVENTS** 355
7.8 **INDEX** 357

NOTE:

Where figures and tables contain specific information, these have the same authority as the numbered rules.

Throughout section 7, text in italics is not part of a Rule but is included to explain the "spirit and intent" of the relevant Rule to assist Athletes, Coaches and Juries to decide if the Rule applies in the given circumstance.

CamScanner

7.1 GENERAL

7.1.1 These Rules are part of the ISSF Technical Rules and apply to all Rifle events.

7.1.2 All athletes, team leaders and officials must be familiar with the ISSF Rules and must ensure that these Rules are enforced. It is the responsibility of each athlete to comply with the Rules.

7.1.3 When a Rule refers to right-handed athletes, the reverse of that Rule refers to left-handed athletes.

7.1.4 Unless a Rule applies specifically to a men's or a women's event, it must apply uniformly to both men's and women's events.

7.2 SAFETY

SAFETY IS OF PARAMOUNT IMPORTANCE

ISSF Safety Rules are found in Rule 6.2.

7.3 RANGE AND TARGET STANDARDS

Target and target standards are found in Rule 6.3. Requirements for ranges and other facilities are found in Rule 6.4.

7.4 RIFLES AND AMMUNITION

7.4.1 Standards for All Rifles

7.4.1.1 **Single Loader Rifles.** Only single shot rifles that must be manually loaded before each shot may be used, except that in the 300m Standard Rifle event a rifle that is legal for use in International Military Sport Council (CISM) 300m Rifle events may be used if it is checked by Equipment Control before the event.

7.4.1.2 **One Rifle Per Event.** Only one (1) rifle is allowed to be used in the Elimination, Qualification and Final Rounds of one (1) event. The action, barrel and stock may not be exchanged, except that a detachable butt-stock may be exchanged. Accessories attached to the action, barrel or stock may be exchanged. A rifle that becomes disabled may be replaced according to Rule 6.13.3, if the Jury approves.

7.4.1.3 **Movement or Oscillation Reduction Systems.** Any device, mechanism or system that actively reduces, slows or minimizes rifle oscillations or movements before the shot is released is prohibited.

7.4.1.4 **Pistol Grips.** The pistol grip for the right hand must be constructed in such a way that it does not rest on the sling or on the left arm.

7.4.1.5 **Barrels** and extension tubes must not be perforated in any way. Compensators and muzzle breaks on the rifle are prohibited. Any construction or device inside the barrel or tube, other than rifling and chambering for the cartridge or pellet, is prohibited. Extension tubes must be inspected by Equipment Control when the athlete attends, either for pre-competition or re-checks.

7.4.1.6 **Sights**

a) The front or rear sights may have light or tinted lenses or a polarizing filter, but the sights may not have any system of lenses. *The intent of this rule is to prohibit the use of any "system of lenses" that would act as a telescope*

CamScanner

to magnify the sight picture seen by the athlete. The only exception to this is that an athlete who requires optical correction to see a clear sight picture is permitted to attach a single lens to the exterior of the rear sight but not to the interior. Additionally, the wearing of contact lenses or a natural lens replacement is allowed because these are essential for an athlete to see normally when not shooting and are not external attachments that are deliberately intended to magnify a sight picture;

b) No Light enhancing system, optical sight, optical system or telescope may be attached to the rifle;

c) A single corrective lens may be attached to the rear sight only; or the athlete may wear a corrective or tinted lens;

d) Any aiming device programmed to activate the firing mechanism is prohibited;

e) A blinder may be attached to the rifle or to the rear sight. The blinder must not be more than 30mm deep (A) nor extend further than 100mm (B) from the centre of the rear sight aperture on the side of the non-aiming eye. A blinder must not be used on the side of the aiming eye; and a prism or mirror device may be used when shooting from the right shoulder while aiming with the left eye, providing it does not have a magnifying lens system. It must not be used when shooting from the right shoulder when using the right eye, or vice-versa.

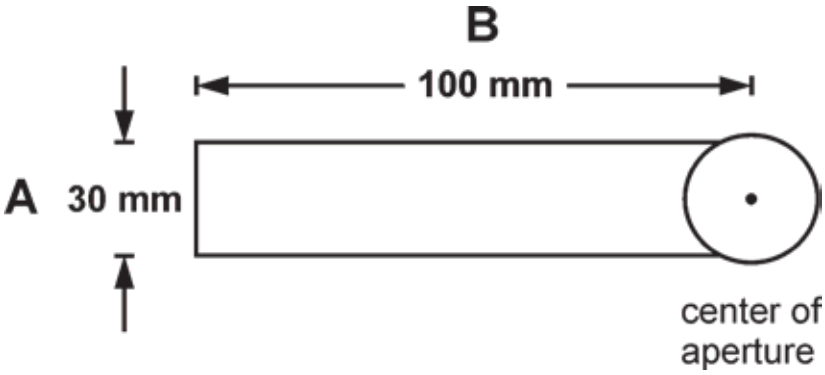

Rear Sight Blinder Diagram

f) On Air and Standard Rifles, the foresight tunnel must be circular in profile when viewed through the rear sight and not have an external shape or additions that can be used as a horizontal reference. Internal foresight elements containing a horizontal and/or vertical reference are allowed.

7.4.1.7 **Electronic triggers are allowed providing:**

a) All components are firmly attached to and contained within the action or stock of the rifle so that the battery and wires are not visible externally;

b) The trigger is operated by the right hand of a right-handed or the left hand of a left-handed athlete;

c) All components are included when the rifle is submitted for inspection by Equipment Control; and

d) The rifle with all components installed complies with the rules governing dimensions and weight for that event.

7.4.2 **Standards for 300m Standard Rifle and 10m Air Rifle**

Measurements stated in this rule are also illustrated in the RIFLE

CamScanner

MEASUREMENTS DIAGRAM, 7.4.4.1 and in the RIFLE MEASUREMENTS TABLE, 7.4.4.2.

7.4.2.1 **Definitions**

The following definitions are included to eliminate any doubt as to the parts of the rifle referred to in the Rifle Rules.

a) **Stock:** The basic frame of the rifle to which the barrel and action, sights, *pistol grip* and *butt-stock* are attached. On a traditional wooden-stock rifle, the stock would be of one piece and incorporate the *fore-end, cheek-piece*, *pistol grip* and *butt-stock*.

b) **Butt-stock:** The part of the rifle between the *pistol grip* and the *butt-plate*. This is the rearmost extension of the stock and may be offset either side of the centre-line of the barrel. The lowest point of the butt-stock may not be more than 140mm below the centre-line of the barrel. This limit does not apply to wooden stocked rifles. The butt-stock may have an adjustable extension on which the butt-plate is mounted. This extension is not included in the 140mm lower limit.

c) **Butt-plate:** The moveable end part of the *butt-stock* that normally rests against the athlete's shoulder when in the shooting position. The overall width must not exceed 30mm. The butt-plate may be moved up or down, offset to the right or left of the *butt-stock* centre-line and/or turned on the vertical and/ or horizontal axis, but no part of the outer edges may extend more than 30mm from that centre-line. If a multi-part butt-plate is used, each part may be turned either right or left but all adjustments must be contained within the overall width. The depth of curve must not exceed 20mm, (7.4.4.2.G), measured to the lowest point that is in contact with the shoulder.

A template with internal dimensions of 153mm x 30mm may be used to check the overall width of the butt-plate. The butt-plate is acceptable if it fits inside the template and no part is more that 30mm from the apparent centre-line of the butt-stock. The inside edge of the template should act as a reference point for the apparent centre-line.

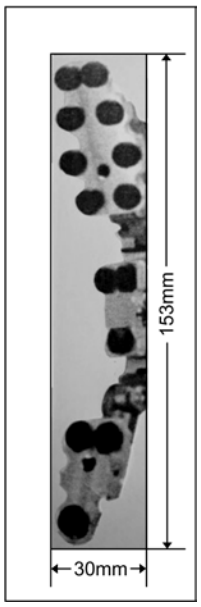

d) **Cheek piece:** The part of the rifle upon which the athlete rests his head or cheek. It may be an integral part of a wooden-stock rifle or an attachment that is adjustable up or down and laterally. If moved laterally, the outside edge must

CamScanner

not be more than 40mm from the centre-line of the *butt-stock.* A soft material can be applied to the cheek piece surface.

e) **Fore-end:** The forward part of the *Stock* below the barrel that contacts the supporting hand of the athlete. This may have an adjustable or removeable section to extend the depth, but those must provide a straight plane surface. It may be inclined, but the lowest point may not be more than 140mm below the centre line of the bore, nor must the width exceed 60mm. If the width of the adjustable section is wider than the upper part of the fore-end, it may be offset left or right but the outer edge must not be more than 30mm from the centreline of the barrel. Material that gives increased grip may not be added and it must not be anatomically formed.

Note: A fore-end extension is not a palm rest and is not contrary to Rule 7.6.1.3g, even if it is detachable

f) **The Pistol Grip:** The pistol grip must not extend laterally (to the side) more than 60mm from a vertical plane that is perpendicular to the centre-line of the barrel. The lowest point must not exceed 160mm from the centre-line of the barrel. Material that gives increased grip may not be added and it must not be anatomically formed.

g) A thumb hole; thumb rest, palm rest, heel rest and spirit level are prohibited. A thumb rest is any protrusion or extension on the side of the pistol grip on which an athlete could rest the thumb of the trigger-hand. A heel rest is any protrusion or extension on the side of the pistol grip designed to prevent the hand from slipping. A palm rest is defined in Rule 7.4.5.2 and only allowed on 50m rifles.

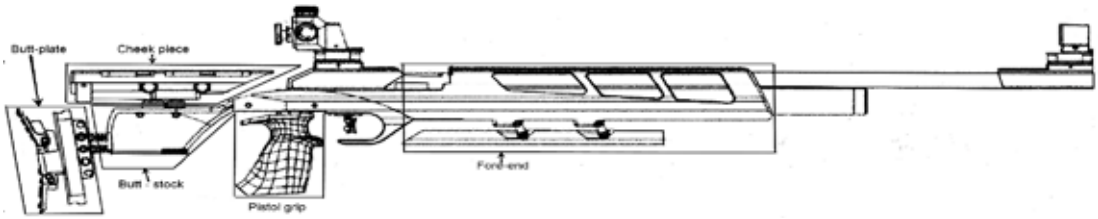

Note: This diagram is intended to illustrate the position of the parts described in a) to g)

7.4.2.2 **Weights**

a) Barrel weights within a radius of 30mm from the centre of the barrel are permitted. Barrel weights may be moved along the barrel;

b) Any devices or weights projecting from the buttstock must be attached as a fixed part of the buttstock (screws or other fixation means). They must not protrude sideways more than 25mm from centreline of buttstock or downwards more than 140mm measured from the centre line of the barrel (Rule 7.4.4.2 f).

c) Weights in addition to barrel weights may be attached to any part of the rifle but must be within the areas shown in the diagram. Weights on or in the lower part of the fore-end may not extend horizontally (laterally) further from the centre-line of the barrel than the distance of the maximum extension of the cheek-piece from the centre-line of the barrel, (dimension J2). Weights in the butt-stock area cannot extend further to the rear than a line that is perpendicular to the deepest point of the butt-plate.

CamScanner

d) Weights must be rigidly attached to the rifle by semi-permanent means so that they cannot be accidentally dislodged or move position. The use of any type of visible adhesive tape to attach weights is prohibited.

Athletes are reminded that the image of athletes and their equipment, when being broadcast or photographed, must be in keeping with the presentation of an Olympic sport. Therefore rifles and attachments should not look as if they are held together with adhesive tape, cable-ties, or other temporary means. A large cluster of lead automobile wheel-balance weights is unsightly and inappropriate and should be concealed or avoided. Manufactured metal weights, firmly attached to the rifle within the permitted areas as shown on the diagram, are acceptable .

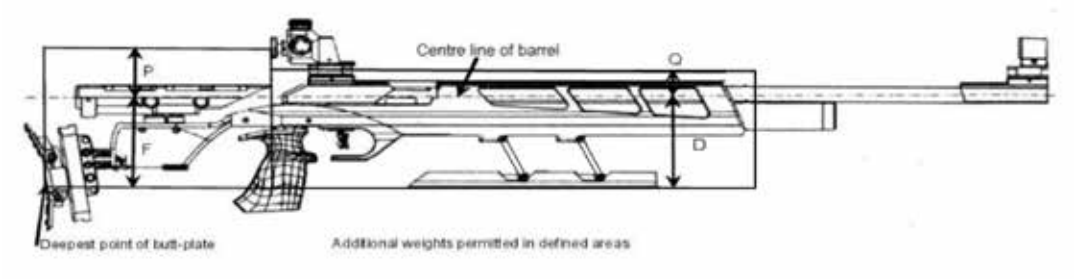

See Rifle Measurements diagram 7.4.4.1 and Rifle Measurements Table 7.4.4.2 for all dimensions.

7.4.3 **Standards for 300m Standard Rifle Only**

All 300m Standard Rifles must conform to the specifications shown in the **Rifle Measurements Table** and with the following restrictions:

a) The minimum trigger pull is 1500 grams. The trigger pull must be measured with the barrel in a vertical position. Trigger weight control checks must be conducted immediately after the last series. A maximum of three (3) attempts to lift the weight are allowed. Any athlete whose rifle fails the test must be disqualified;

b) The same rifle must be used in all positions without change. The adjustment of the butt-plate and hand stop or the changing of front sight inserts or the adjustment of the rear sight or its eyepiece are permitted. The removal of the cheek piece during competition is permitted for barrel cleaning and bolt removal under supervision of the Jury; but its position must not be changed when it is replaced; and quick fasteners are not permitted.

c) The overall length of the barrel including any extension tube, measured from the breech face to the apparent muzzle, must not exceed 762mm.

7.4.4 **Standards for 10m Air Rifle Only**

Any type of compressed air or gas rifle that conforms to the specifications in the **Rifle Measurements Table** and the following additional restrictions:

a) The total length of the air rifle system measured from the back end of the mechanism to the apparent muzzle must not exceed 850mm; and

b) The front sight may not extend beyond the apparent muzzle.

c) Any Air Rifle must not exceed 7.5 joule and must bear this mark F

CamScanner

7.4.4.1 **Rifle Measurements diagram**

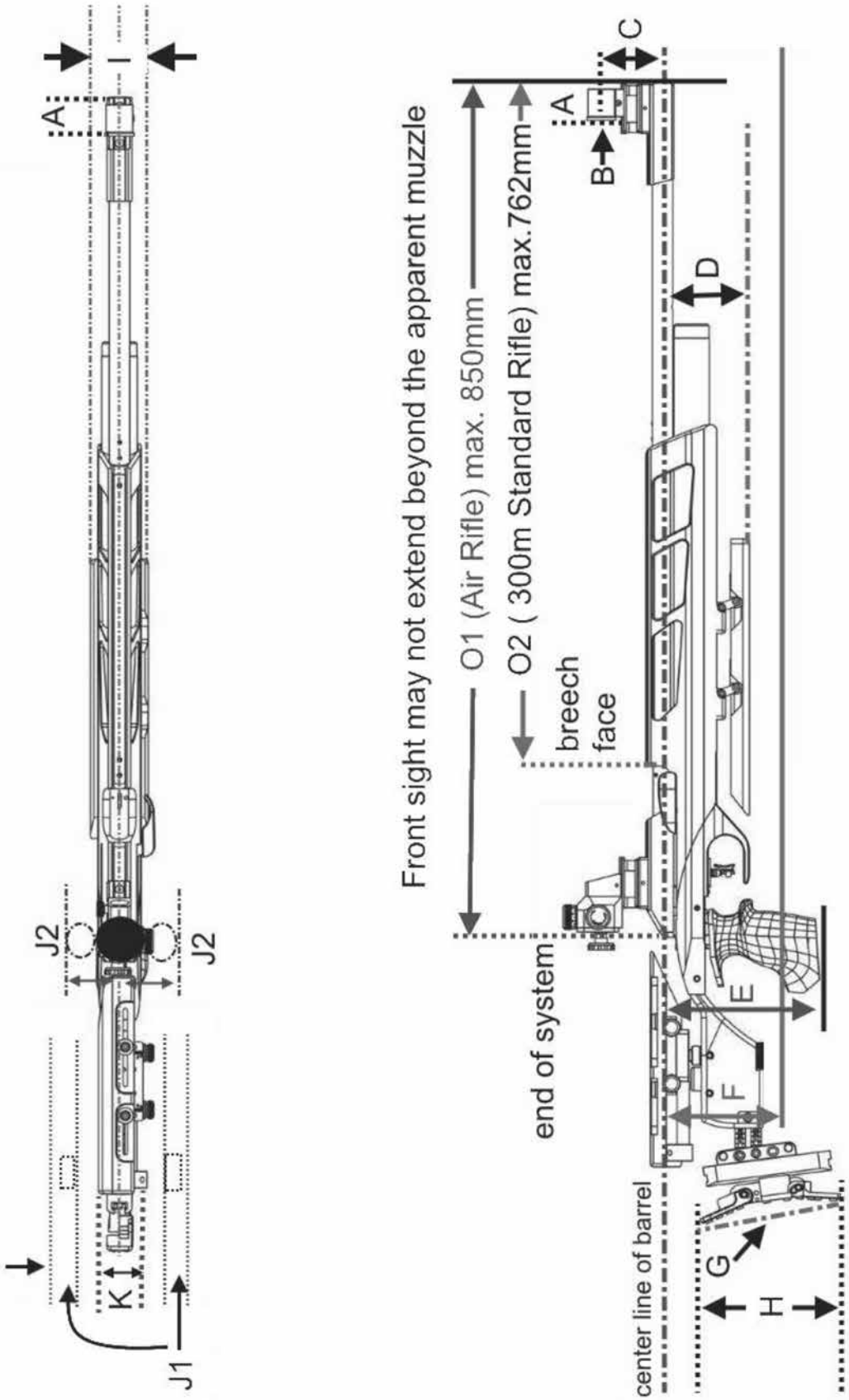

CamScanner

7.4.4.2 Rifle Measurements Table

Measurements for dimensions C, D, E, F, J1, J2, P and Q are from the centre-line of the bore.

Key	RIFLE FEATURE	300m Standard Rifle	Air Rifle
A	Length of front sight tunnel	50mm	50mm
B	External diameter of front sight tunnel, which must be circular in profile.	25mm	25mm
C	Distance from centre of the front sight ring or top of post to centre of bore	80mm	80mm
D	Depth of fore-end	140mm	140mm
E	Lowest point of pistol grip	160mm	160mm
F	Lowest point of butt-stock between the pistol grip and the butt-plate (does not apply to wooden stocked rifles) Maximum depth of additional weights.	140mm	140mm
G	Depth of curve of butt-plate	20mm	20mm
H	Heel to toe length of butt-plate	153mm	153mm
I	Maximum thickness (breadth) of fore-end	60mm	60mm
J1	Maximum distance of cheek-piece from a vertical plane through the centre-line of the barrel	40mm	40mm
J2	Maximum distance of any part of the pistol grip from a vertical plane through the centre-line of barrel	60mm	60mm
K	Offset of the butt-plate as measured from the left or right edge of the butt-plate to butt-stock centre (7.4.2.1)	30mm	30mm
L	Trigger weight	1500 grams minimum	Free
M	Weight with sights (and hand stop 300m)	5.5kg	5.5kg
N	The front sight must not extend beyond the apparent muzzle of the rifle	Must not extend	Must not extend
01	Air Rifle: Total length of the Air Rifle system		850mm
02	Standard Rifle: The overall length of the barrel including extension (from the muzzle to the breech face)	762mm	
P	Maximum height of weights behind rear sights	60mm	60mm
Q	Maximum height of weights between the front and rear sights	30mm	30mm

CamScanner

7.4.5 **Standards for 50m Rifles**

All rifles chambered for rimfire 5.6mm (.22” cal.) long rifle cartridges are permitted. These Rules cannot proscribe all possible combinations of attachments which may be fitted to rifles, such as additional sights, etc., but the “spirit and intent”, (as per Rule 6.8.13) of this rule is that 50m rifles should have the general appearance as the diagram below, i.e., only one set of sights, buttstock, palm-rest or extendable fore-end etc., may be fitted to a rifle at a time. This does not prevent these items being swapped during any stage of competition.

a) The weight of the rifle for men and women may not exceed 8.0kg with all accessories used, including the palm rest and hand stop;

b) Weights on or in the lower part of the stock or buttstock, may not extend horizontally (laterally) further from the centre-line of the barrel than the distance of the maximum extension of the cheek-piece from the centre-line of the barrel;

c) Weights cannot extend further to the rear than a line perpendicular to the deepest point in the butt-plate;

d) Weights attached to the butt-stock must be rigidly attached and may not be taped to the butt-stock;

e) Weights on the rifle fore-end may extend no lower than 90mm below the centre-line of the barrel and not further forward than 700mm from the back (rear) end of the system; Any such weight must be incapable of being converted into a bipod for use in supporting the rifle, when placed down after shooting or between positions in the 3-position events.

f) The lowest point on the butt-stock may not extend down more than 140mm from the centre-line of the bore. This limit does not apply to wooden stocked rifles

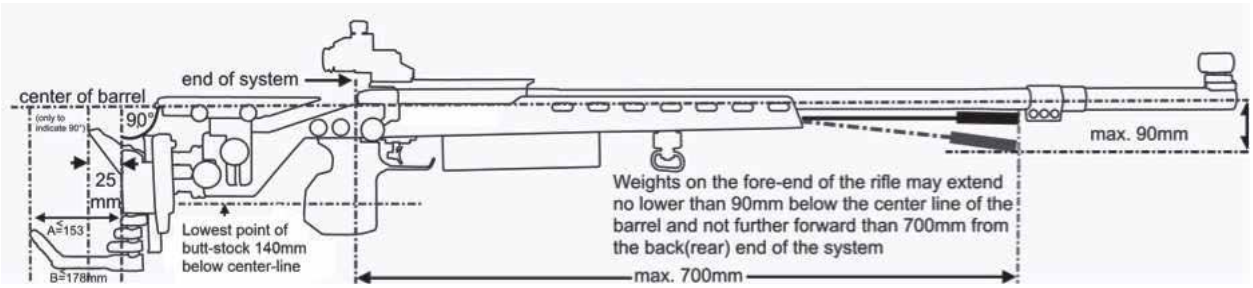

7.4.5.1 **Hook Butt Plate**

A hook butt-plate that complies with the following restrictions may be used;

The butt hook projecting rearward from the bottom of the butt-plate must not extend more than 153mm (A) past the rear of a line that is perpendicular to a line drawn through the axis of the bore of the rifle, and that is tangent to the deepest part of the butt-plate depression that normally rests against the shoulder;

The butt hook projecting from the bottom of the butt-plate must have a total outside length around any curve or bend of not more than 178mm (B);

The top projection of the butt-plate must not extend more than 25mm to the rear of this perpendicular line; and

CamScanner

Any devices or weights projecting forward or laterally from the lower part of the butt-plate are prohibited.

7.4.5.2 **Palm Rests**

A palm rest is any removeable attachment or extension below the fore-end that aids the support of the rifle by the forward hand. Orthopaedic shaping, (finger or thumb grooves or depressions), is allowed. Such attachments must not extend more than 200mm below the centre line of the barrel. Palm rests may not be used on air rifles in any circumstances. They may be used on 50m rifles in the standing position only.

A fore-end extension that provides a straight plane surface and is not deeper than 140mm is not a palm rest.

7.4.5.3 **Pistol Grips**

No part of the pistol grip may be extended or constructed in any way that would allow it to touch or support the back of the hand or the wrist.

7.4.5.4 **Standards for 300m Rifles**

Standards for 300m rifles are the same as for the 50m Rifle (Men and Women). See 7.4.5 and the RIFLE SPECIFICATION TABLE (7.7.5).

300m rifles may have a mirage band with a maximum width of 60mm.

7.4.6 **Ammunition**

Rifle	Calibre	Other specifications
50m	5.6mm **(.22")**	Rimfire Long Rifle. Only bullets made of lead or similar soft material are permitted.
10m	4.5mm (.177")	Projectiles of any shape made of lead or other soft material are permitted.
300m	Maximum 8mm	Ammunition of any description that may be fired without any danger to athletes or range personnel. Tracer, armour piercing, and incendiary ammunition is prohibited.

7.5 CLOTHING REGULATIONS

See the General Technical Rules for general standards regarding clothing and the testing of clothing (Rule 6.7).

7.5.1 **General Standards for Rifle Clothing**

7.5.1.1 All shooting jackets, shooting trousers and shooting gloves must be made of flexible material that does not materially change its physical characteristics, that is, become stiffer, thicker or harder, under commonly accepted shooting conditions. All lining, padding and reinforcements must meet the same specifications. Any lining or padding must not be quilted, cross-stitched, glued or otherwise affixed to the outer clothing layer other than at normal tailoring points. All lining or padding must be measured as a part of the clothing.

7.5.1.2 Only one (1) shooting jacket and only one (1) pair of shooting trousers may be used by each athlete in all Rifle events in any ISSF Championship. All Rifle shooting jackets and shooting trousers must have a seal with a unique

CamScanner

serial number issued by ISSF Equipment Control and registered in an ISSF database. Athletes with jackets or trousers that do not have a seal must bring them to Equipment Control to have a seal attached and registered in the ISSF database. Two (2) jackets and two (2) trousers may be registered to each athlete. Athletes with more than one jacket or trousers with ISSF seals must inform the ISSF Equipment Control which item will be used in that Championship. Athletes that change jackets or trousers or any with no seal (new or changed) must bring them to Equipment Control to obtain a seal and retire the previous seal (6.7.6.2.e). When an athlete is selected for post-competition testing, the test must confirm that the seal number registered to that athlete was the seal number on the clothing used by that athlete.

7.5.1.3 Ordinary athletic type training trousers or normal athletic type training shoes may be worn in any event or position. If shorts are worn during competitions, the bottom of the leg material must be no more than 15cm above the centre of the kneecap. Sandals of any type may not be worn.

7.5.1.4 Athletes are responsible for ensuring that all items of clothing used by them comply with these Rules. The Equipment Control Section must be open to make voluntary inspections of athletes' clothing from the Official Training day until the last day of Rifle competition and athletes are encouraged to bring their Rifle clothing items for an Equipment Control check before the competitions to be sure they comply with these Rules. In preparing jackets and trousers for competitions, athletes must make allowances for any measurement variations that may occur because of changes in temperature, humidity or other environment conditions.

7.5.1.5 Post-competition checks will be made of all Rifle clothing items after Elimination and Qualification Round competitions to ensure compliance (6.7.9).

7.5.2 **Clothing Measurement Standards**

7.5.2.1 **Clothing Thickness Standards Table**

Rifle competition clothing must comply with these thickness measurement standards:

Measurement Location	Thickness	Jackets	Trousers	Shoes	Gloves	Under-clothing
Normal	Single	2.5mm	2.5mm	4.0mm		2.5mm
Normal	Double	5.0mm	5.0mm			5.0mm
Normal	Total				12.0mm	
Reinforcements	Single	10.0mm	10.0mm			
Reinforcements	Double	20.0mm	20.0mm			

No measurement greater than the thickness measurement standards in the chart may be approved (zero tolerance).

7.5.2.2 **Stiffness Measurement Standards**

Rifle competition clothing must comply with these stiffness measurement standards:

a) If the measuring cylinder is depressed at least 3.0mm, the material is acceptable; (see rule 6.5.2)

CamScanner

b) If a measurement below 3.0mm is displayed, the material is too stiff. No measurement below the minimum measurement of 3.0mm may be approved; and

c) Every part of the jacket or trousers must be capable of being measured with the 60mm measuring cylinder. If a part is too small for normal testing (no flat area 60mm or larger), measuring must be done over the seams.

7.5.2.3 **Shoe Sole Flexibility Standard**

The soles of athletes' shoes must bend at least 22.5 degrees when a force of 15 Newton-Meters is applied to the heel area while the boot or shoe is clamped in the testing device (See Rule 6.5.3).

7.5.3 **Shooting Shoes**

Normal street type or light athletic shoes are permitted in all positions. Special shooting shoes not exceeding the following specifications may be worn only in 1Om and 50m and 300m 3 Positions events. Special shooting shoes must not be worn in Rifle Prone events:

7.5.3.1 The material of the upper part (above the line of the sole) must be of soft, flexible, pliable material, not thicker than 4mm, including all linings, when measured on any flat surfaces such as point D in the **Shooting Shoe Measurements Table** (7.5.3.6).

7.5.3.2 The shoe sole must be constructed of the same material and composition throughout its length and breadth and the sole must be flexible in the entire forward part of the foot. Athletes may use removeable inner soles or inserts in their shoes, but any inserts must also be flexible in the forward part of the foot.

7.5.3.3 To demonstrate that soles are flexible, athletes must walk normally (heel-toe) at all times while on the FOP. A warning will be given for the first offense, a two-point penalty and disqualification will be given for subsequent violations.

7.5.3.4 The height of the shoe from the floor to the highest point (Dimension C, **Shooting Shoe Measurements Table)** must not exceed two thirds (2/3) of the length.

7.5.3.5 If an athlete wears shoes, they must be a matched pair externally.

7.5.3.6 **Shooting Shoe Measurements Table**

Athlete's shoes must not exceed the maximum dimensions shown in the drawing and chart:

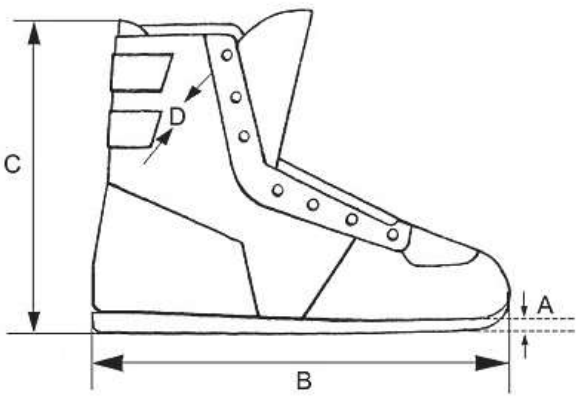

CamScanner

A.	Maximum thickness of sole at the toe: 10mm.
B.	Overall length of shoe: According to size of wearer's foot.
C.	Maximum height of shoe: Not to exceed two-thirds (2/3) length of B.
D.	Upper part of shoe material maximum thickness 4mm.
The shoe sole must follow the external curvature of the shoe and may not extend more than 5.0mm beyond the external dimensions of the shoe at any point. Toes or heels may not be cut square or flat.	

7.5.4 **Shooting Jacket**

7.5.4.1 The body and sleeves of the jacket, including the lining, must not exceed 2.5mm in single thickness and 5.0mm in double thickness at any point where flat surfaces may be measured. The jacket must not be longer than the bottom of the balled fist (see **Shooting Jacket Measurements,** 7.5.4.9).

7.5.4.2 Closure of the jacket must be only by non-adjustable means e.g. buttons or zippers. The jacket must not overlap more than 100mm at the closure (see Jacket Table). The jacket must hang loosely on the wearer. To determine this, the jacket must be capable of being overlapped beyond the normal closure by at least 70mm, measured from the centre of the button to the outside edge of the button hole. The measurement will be taken with the arms at the sides. A measurement must be made with an-overlap gauge with a tension of 6.0kg to 8.0kg. The area surrounding the button hole is limited to a maximum of 12mm, and this area may exceed the permitted 2.5mm thickness.

7.5.4.3 All straps, laces, bindings, seams, stitching or devices which may be construed as artificial support are prohibited. However, it is permitted to have one (1) zipper or not more than two (2) straps to take up loose material in the area of the shoulder pad (see **Shooting Jacket Measurements,** 7.5.4.9). No other zipper or other closing or tightening device is permitted other than those specified in these Rules and Diagrams.

7.5.4.4 The construction of the back panel may include more than one (1) piece of material provided this construction does not stiffen or reduce the flexibility of the jacket. All parts of the back panel must comply with the thickness maximum of 2.5mm and the stiffness minimum of 3.0mm.

7.5.4.5 The construction of the side panel may not place any seam or seams under the elbow of the support arm in the standing position within a seam-free zone that extends 70mm above the tip of the elbow and 20 mm below the tip of the elbow. This must be checked with the athlete wearing the jacket fully closed and while holding the rifle in the standing position.

7.5.4.6 The athlete must be capable of fully extending both arms (straighten sleeves) while wearing the buttoned jacket. In the prone and kneeling positions, the sleeve of the shooting jacket must not extend beyond the wrist of the arm on which the sling is attached. The sleeve must not be placed between the hand or glove and the fore-end of the stock when the athlete is in the shooting position. The end of the sleeve may be allowed to touch the rifle if it does not give any apparent support.

7.5.4.7 No Velcro, sticky substance, liquid, or spray may be applied to the outside or inside of the jacket, pads or shoes and/or floor or equipment. Roughening the

CamScanner

material of the jacket is permitted. Violations will be penalized according to the Rules.

7.5.4.8 Shooting jackets may have reinforcement patches added only to their outside surfaces subject to the following limitations:

a) Maximum thickness, including jacket material and all linings: 10mm single thickness or 20mm when measured as a double thickness;

b) Reinforcement may be added on both elbows but must not extend to more than half (1/2) of the circumference of the sleeve. On the arm which holds the sling, the reinforcement may extend from the upper arm to a point 100 mm from the end of the sleeve. The reinforcement on the opposite arm may have a maximum length of 300mm;

c) Only one (1) hook, loop, button or similar device may be fastened to the outside of the sleeve or shoulder seam on the sling arm to prevent the sling from sliding;

d) Reinforcement on the shoulder where the butt-plate rests must not be longer than 300mm in the longest dimension (see Rule 7.5.4.9);

e) All inside pockets are prohibited; and

f) One (1) external pocket is permitted, located on the right front side (left front side for left hand athletes) of the jacket. The maximum size of the pocket is 250mm high from the lower edge of the jacket and 200mm wide.

7.5.4.9 **Shooting Jacket Measurements**

Shooting jackets must comply with the specifications shown in the drawing:

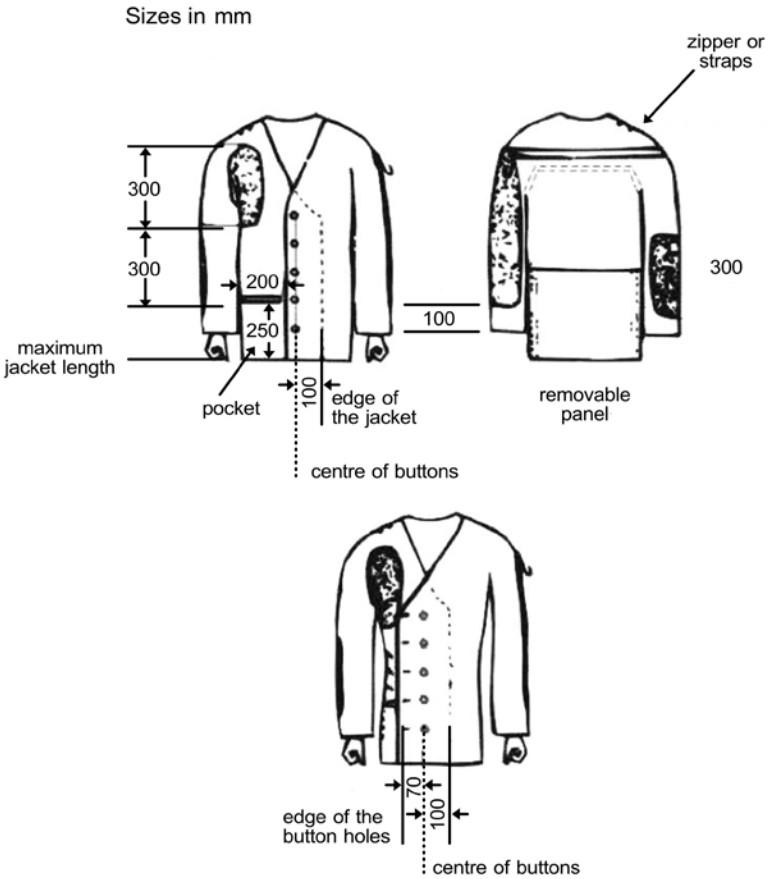

7.5.5 **Shooting Trousers**

7.5.5.1 **Thickness** - The trousers, including the lining, must not exceed 2.5 mm in single thickness and 5mm in double thickness at any point where flat surface may be measured.

a) Height - The top of the trousers must not fit or be worn higher on the body than 50 mm above the crest of the hipbone.

b) Pockets - All pockets are prohibited.

c) Tightening - The trousers must be loose around the legs. All drawstrings, zippers, or fasteners to tighten the trousers around the legs or hips are prohibited.

d) Waist belt - To support the trousers only a normal waist belt not more than 40 mm wide and 3mm thick or braces (suspenders) may be worn. If a belt is worn in the standing position, the buckle or fastening must not be used to support the left arm or elbow. The belt must not be doubled, tripled etc. under the left arm or elbow.

e) Waist-band - If the trousers have a waist-band it may not be more than 70mm wide. If the thickness of the waistband exceeds 2.5mm, a waist belt is not permitted. If a waist belt is not worn, the absolute maximum thickness of the waistband is 3.5mm.

f) Belt loops - There can be a maximum of seven (7) belt loops, not more than 20mm in width, with at least 80mm between belt loops.

g) Closure - The trousers may be closed by one (1) hook and up to five (5) eyes, or up to five (5) adjustable snap fasteners, or similar closure or Velcro that must not be multi-layered. Only one (1) type of closure is permitted. A Velcro closure combined with any other closure is prohibited.

h) Ordinary trousers - If special shooting trousers are not worn, ordinary trousers may be worn providing they do not give artificial support to any part of the body.

7.5.5.2 Zippers, buttons, Velcro or similar non-adjustable fasteners or closures, may be used in the trousers only in the following places:

a) One type of fastener or closure in the front to open and close the trouser fly. The fly must not be lower than the level of the crotch;

b) Any holes that cannot be closed are permitted; and

c) Only one (1) other fastener is permitted in each trouser leg. The opening (fastener) must not start closer than 70 mm from the top edge of the trousers. It may, however, extend to the bottom of the trouser leg (see Jacket and Trousers Table). One (1) fastener is permitted either in the front of the upper leg or the back of the leg, but not in both places in one (1) leg.

7.5.5.3 Reinforcements may be added to both knees of the trousers. Knee reinforcements may have a maximum length of 300mm and must not be wider than half the circumference of the trousers leg. The thickness of reinforcement including the trousers material and any linings must not exceed 10mm in single thickness (20mm double thickness).

7.5.5.4 Shooting trousers must not be worn in the Rifle Prone events, but they may be worn in the prone stages of Rifle 3-Position events.

CamScanner

7.5.5.5 **Shooting Trousers Measurements**

Shooting Trousers must comply with the specifications shown in the drawing:

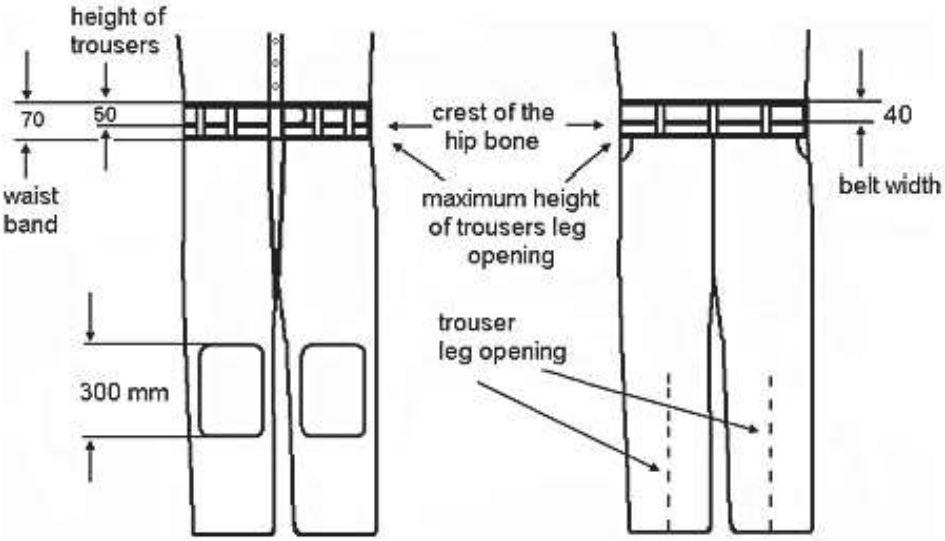

7.5.6 **Shooting Gloves**

7.5.6.1 The total thickness must not exceed 12mm when measuring front and back materials together at any point other than on seams and joints. When athlete is also wearing a lining glove this must be included in the thickness measurement.

7.5.6.2 The glove must not extend more than 50mm beyond the wrist measured from the centre of the wrist knuckle (see drawing). Any strap or other closure device at the wrist is prohibited. However, a portion of the wrist may be elasticated to enable the glove to be put on, but it must leave the glove loose around the wrist.

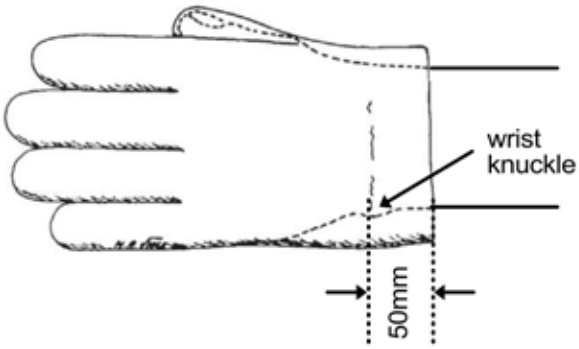

7.5.7 **Underclothing**

7.5.7.1 Clothing worn under the shooting jacket must not be thicker than 2.5mm single thickness or 5mm double thickness. The same applies to all clothing worn under the trousers. Jeans or other ordinary trousers cannot be worn under shooting trousers.

CamScanner

7.5.7.2 Only normal personal undergarments and/or training clothing that does not immobilize or unduly reduce the movement of the athlete's legs, body or arms may be worn under the shooting jacket and/or trousers. Any other undergarments are prohibited.

7.5.8 Equipment and Accessories

7.5.8.1 Spotting Telescopes

The use of telescopes not attached to the rifle to locate shots and judge wind is permitted for 50m and 300m events only.

7.5.8.2 Slings

Maximum sling width is 40mm. The sling must be worn only on the upper part of the left arm and from there be connected to the fore-end of the rifle stock. Slings may be attached to the fore-end of the rifle at a single point only. The sling must pass along one side of the hand or wrist only. If the sling is worn such that it forms a loop between the arm and the forward attachment, both halves must be fastened together or attached so that the width does not exceed 40mm where it passes around the hand or wrist. No part of the rifle may touch the sling or any of its attachments except at the sling swivel and hand stop.

7.5.8.3 Rifle Rests

The use of a rifle rest for resting the rifle between shots is permitted providing that no part of the stand is higher than the athlete's shoulders when holding the rifle in a standing shooting position. A stand for resting the rifle must not be placed in front of the shooting table or bench in the standing position. Care must be exercised that while resting the rifle, it does not intrude on the athlete on either side. For safety while the rifle is on the rifle rest, it must be held by the athlete.

7.5.8.4 Shooting Box or Bag

The shooting box or bag must not be placed forward of the athlete's forward shoulder on the firing line, except that in the standing position a shooting box or bag, table, or stand may be used as a rifle rest between shots. The shooting box or bag, table or stand must not be of such size or construction as to interfere with athletes on adjacent points or to constitute a wind break.

7.5.8.5 Kneeling Roll

Only one (1) cylindrically shaped roll is allowed for shooting in the kneeling position. The dimensions are a maximum of 25cm long and 18cm in diameter. It must be made of soft and flexible material. Binding or other devices to shape the roll are not permitted.

7.5.8.6 Bipod

Bipeds may be used to support the rifle before and after shooting or during position changes, but bipeds, whether fixed or folding, must be removed from the rifle during all MATCH firing times.

7.5.8.7 Kneeling Heel Pad

A separate piece of flexible, compressible material with maximum dimensions of 20cm x 20cm may be placed on the heel in the kneeling position. The kneeling heel pad may be no thicker than 20mm when compressed with the measuring device used to measure Rifle clothing thickness.

CamScanner

7.5.8.8 **Visor or Cap**

A cap or visor may be worn. The cap or visor may extend forward of the athlete's forehead no more than 80mm. The Cap or visor made with a flexible material may touch the rear sight. A cap or visor that is made of non-flexible and stiff/hard material is not allowed to touch the rear sight.

Any type of Cap or visor may not be worn in a way that makes it a side blinder, the jury must be able to see the side of the athlete's eye when viewed laterally at the same height from the ground.

The original prohibition on caps or visors touching the rear sight was to prevent those being used as a point of reference and to possibly steady the rifle to prevent horizontal rotation. The flexible rubber visors do not offer those advantages and are therefore allowed.

7.6 SHOOTING EVENT PROCEDURES AND COMPETITION RULES

7.6.1 Shooting Positions

7.6.1.1 **Kneeling**

a) The athlete may touch the firing point surface with the toe of the right foot, the right knee and the left foot;

b) The rifle may be held with both hands and the right shoulder;

c) The cheek may be placed against the rifle stock;

d) The left elbow must be supported on the left knee;

e) The point of the elbow must not be more than 100mm over or 150mm behind the point of the knee;

f) The rifle may be supported by the sling but the fore-end behind the left hand must not touch the shooting jacket;

g) No part of the rifle may touch the sling or its attachments;

h) The rifle must not touch or rest against any other point or object;

i) If the kneeling roll is placed under the right foot or ankle, the foot must not be turned at an angle of more than 45 degrees;

j) If the kneeling roll is not used, the foot may be placed at any angle. This may include placing the side of the foot and the lower leg in contact with the surface of the firing point or shooting mat.

k) No portion of the upper leg or buttocks may touch the surface of the firing point or shooting mat at any point;

l) If the athlete uses the shooting mat he may kneel completely or partially on the mat so that there may be up to three points of contact, (toe, knee, foot). Other articles or padding may not be placed under the right knee. A kneeling roll may be used in conjunction with the mat if required.

m) Only the trousers and underclothing may be worn between the athlete's seat and heel, except that a kneeling heel pad may be used. The jacket or other articles must not be placed between these two (2) points; and

n) The right hand may not touch the left hand, left arm or the left side of the shooting jacket or sling.

CamScanner

7.6.1.2 **Prone**

a) The athlete may lie on the bare surface of the firing point or on the shooting mat;

b) He may also use the mat by resting his elbows on it.

c) The body must be extended on the firing point with the head toward the target;

d) The rifle may be supported by both hands and one shoulder only;

e) The cheek may be placed against the rifle stock.

f) The rifle may be supported by a sling attached to the fore-end in front of the hand stop.

g) No part of the rifle may touch the sling or its attachments;

h) The rifle must not touch, or rest against, any other point or object;

i) Both forearms and sleeves of the shooting jacket forward of the elbow must be visibly raised from the surface of the firing point;

j) The athlete's sling (left) forearm must form an angle not less than 30 degrees from the horizontal, measured from the axis of the forearm;

k) The right hand and/or arm may not touch the left arm, shooting jacket or sling; and

l) Shooting trousers must not be worn in the Rifle Prone events.

7.6.1.3 **Standing**

a) The athlete must stand free, without any artificial or other support, with both feet on the firing point surface or on the shooting mat;

b) The rifle may be held with both hands and the shoulder or the upper arm near the shoulder and the part of the chest immediately adjacent to the right shoulder;

c) The cheek may be placed against the rifle stock;

d) The rifle must not touch the jacket beyond the apparent centre line of the chest.

e) The left upper arm and elbow may be supported on the chest or on the hip. If a belt is worn the buckle or fastening must not be used to support the left arm or elbow;

f) The rifle must not touch or rest against any point or object except in the area permitted by 7.6.1.3.b). There must be clearly visible gaps between the rifle and any other part of the athlete's clothing, the athlete's face and the rear-sight including a blinder if attached to the rifle, and between both hands.

The width of this gap is deliberately not specified to avoid an athlete being disturbed during match firing by an Official or Jury member taking physical measurements, but the gap must be such that there is no doubt that the rifle is not touching any point or object when viewed.

g) A palm rest may be used but not in 300m Standard Rifle or 10m Air Rifle events;

h) A hand stop/sling swivel is not allowed in this position for 300m Standard Rifle and 10m Air Rifle;

CamScanner

i) In this position, the use of the sling is prohibited; and The right hand may not touch the left hand, left arm or the left side of the shooting jacket.

7.7 RIFLE EVENTS

See ISSF RECOGNIZED SHOOTING EVENTS Rule 3.3 and Rule 7.7.4, RIFLE EVENT TABLE.

7.7.1 **50m and 300m 3 Positions events** must be fired in order: **Kneeling - Prone - Standing.**

7.7.2 A combined 15-minute Preparation and Sighting Time must be provided before MATCH firing starts (Rule 6.11.1.1).

7.7.3 In 3-Position events, after athletes complete the kneeling and prone positions, changing from MATCH to Sighting and back to MATCH is the responsibility of the athlete. Athletes may fire unlimited Sighting shots before starting MATCH firing shots in the prone and standing positions. No additional time is allowed for these Sighting shots. If an athlete inadvertently fails to switch from MATCH to Sighting after changing positions, any shots recorded as extra shots in the previous position must be nullified and the target must be reset to Sighting.

7.7.4 **RIFLE EVENTS QUALIFICATION TABLE**

Event	Men/ Women	No. of Shots	Number of Shots Per MATCH Target (paper)	Number of Sighting Targets (paper)	Time: Pit Operated or Target Carriers (when paper targets are used)	Time: Electronic Targets
10m Air Rifle	Men or Women	60	1	4	1 hour, 30 minutes	1 hour, 15 minutes
10m Mixed Team	Men & Women	2x40	1	4	1 hour	50 Minutes
50m Rifle 3 Positions	Men or Women	60		4 for each position	2 hours,	1 hour, 30 minutes
50m Rifle Prone	Men or Women	60		4	1 hour	50 minutes
300m Rifle 3 Positions	Men or Women	60	10	1 for each position	2 hours, 15 minutes	1 hours, 45 minutes
300m Rifle Prone	Men or Women	60	10	1	1 hour, 15 minutes	50 minutes
300m Standard Rifle 3 Positions	Open	60	10	1 for each position	2 hours, 15 minutes	1 hour, 45 minutes
Note: The combined Preparation and Sighting Time of 15 minutes must start before the published start time of the event.						

CamScanner

7.7.5 RIFLE SPECIFICATION TABLE

Event	Maximum weight	Trigger	Maximum Length of the barrel/system	Ammunition	Thumb hole, thumb rest, palm rest, heel rest, spirit level
10m Air Rifle	5.5kg (Men/ Women)	No set trigger	850mm (system)	4,5mm (.177”)	No
50m Rifle 3 Positions and Prone	8.0kg (Men/ Women)	No restriction	No restriction	5.6mm (.22”) Long Rifle	Yes - palm rest only standing
300m Rifle 3 Positions and Prone	8.0kg (Men/ Women)	No restriction	No restriction	Maximum 8mm	Yes - palm rest only standing
300m Standard Rifle 3 Positions	5.5kg	No set trigger Minimum trigger pull: 1500g	762mm (barrel)	Maximum 8mm	No quick fasteners permitted
Note: The rifle must be weighed with all accessories, including palm rest or hand stop (if used).					

CamScanner

7.8 INDEX

10m Air Rifle	7.4.2 / 7.4.4
3 Positions - Change Targets after a Position	7.7.3
3 Positions - Combined Preparation & Sighting Time	7.7.2
3 Positions - Firing Order	7.7.1
300m Rifle	7.4.5.4
300m Standard Rifle	7.4.2 / 7.4.3
50m Rifle	7.4.5
Accessories and Equipment	7.5.8
Aiming left - Shooting right/ Aiming right - Shooting left	7.4.1.6e
Ammunition	7.4.6
Application of Rules for all Rifle Events	7.1.1
Barrel - Length - 300m Standard Rifle	7.4.3 C
Barrels	7.4.1.5
Bipod	7.5.8.6
Blinder - On the Rear Sight	7.4.1.6e
Butt Plate - 50m Rifle	7.4.5.1
Butt Plate - Offset on 300m Standard Rifles / 1Om Air Rifles	7.4.2.1
Caps or Visor	7.5.8.8
Change a Rifle after disabled	7.4.1.2
Change or more than one Part of a Rifle per Event	7.4.1.2
Characteristics of Shooting Clothing	7.5.1.3 / 7.5.1.4
Check after Competition/ Qualification (Rule 6.7.9)	7.5.1.5
Clothing Regulations	7.5
Clothing under the Jacket and Trousers	7.5.7
Clothing Measurement Standards	7.5.2
Clothing Stiffness Measurement Standards	7.5.2.2
Clothing Thickness Standards Table	7.5.2.1
Compensators	7.4.1.5
Corrective Lenses	7.4.1.6c
Device inside Barrels / Tubes	7.4.1.5
Disabled Rifle	7.4.1.2
Electronic Triggers	7.4.1.7
Equipment and Accessories	7.5.8
General Rifle	7.1
Hand Heel Rest - 300m Standard Rifle / 10m Air Rifle	7.4.2.2
Hook - 50m Rifle	7.4.5.1

CamScanner

Increased Grip Material - 300m Standard Rifle / 10m Air Rifle	7.4.2.6
Kneeling	7.6.1.1
Kneeling Heel Pad	7.5.8.7
Kneeling Roll	7.5.8.5
Knowledge of the Rules	7.1.2
Left-handed Athlete - Right-handed Athlete	7.1.3
Length of Barrel - 300m Standard Rifle	7.4.3 C
Length of Rifle System - 10m Air Rifle	7.4.4 a
Lenses	7.4.1.6
Light Filters	7.4.1.6
Material for Shooting Jackets, Shooting Trousers, Shooting Gloves	7.5.1.1
Men's Events/ Women's Events	7.1.4
Mirage Band - 300m Rifle	7.4.5.4
Movement or Oscillation Reduction Systems	7.4.1.3
Muzzle Brakes	7.4.1.5
Number of Shooting Jackets and Shooting Trousers	7.5.1.2
One Rifle per Event	7.4.1.2
Palm rest - 300m Standard Rifle/ 10m Air Rifle	7.4.2.2
Palm rest - 50m Rifle	7.4.5.2
Perforation of Barrels / Tubes	7.4.1.5
Pistol Grip Extension - 300m Standard Rifle/ 1Om Air Rifle	7.4.2.3
Pistol Grips	7.4.1.4
Pistol Grips - 50m Rifle	7.4.5.3
Positions	7.6.1
Post-Competition Testing (Rule 6.7.9)	7.5.1.2 / 7.5.1.5
Preparation and Sighting Time (Rule 6.11.1.1)	7.7.2
Program Order	7.7.1
Prone	7.6.1.2
Range and Target Standards	7.3
Reinforcements - Shooting Jacket	7.5.4.8
Reinforcements - Shooting Trousers	7.5.5.3
Reinforcements - Clothing Thickness Table	7.5.2.1
Rests - Rifle Rests	7.5.8.3
Rifle Events - See the Rifle Events Qualification Table 7.7.4	7.7
Rifle Measurements - 10m Air Rifle	7.4.4
Rifle Measurements Table - 300m Standard Rifle/ 1Om Air Rifle	7.4.4.2
Rifle Specification Table	7.7.5
Rifles and Ammunition	7.4

CamScanner

Right-handed Athlete - Left-handed Athlete	7.1.3
Safety	7.2
Shooting Box / Shooting Bag	7.5.8.4
Shooting Events Procedures and Competition Rules	7.6
Shooting Gloves	7.5.6
Shooting Gloves - Closure	7.5.6.2
Shooting Gloves - Thickness	7.5.6.1
Shooting Jacket	7.5.4
Shooting Jacket -Artificial Support; Straps, Laces, Stitching, etc.	7.5.4.3
Shooting Jacket - Body, Sleeves, Length	7.5.4.1
Shooting Jacket - Both Arms straighten Sleeves	7.5.4.6
Shooting Jacket - Closure: Non-adjustable	7.5.4.2
Shooting Jacket - Construction of the Back Panel	7.5.4.4
Shooting Jacket - Drawing & Measurements	7.5.4.9
Shooting Jacket - Fastening of Sling	7.5.4.8 C
Shooting Jacket - Loose Material in the Area of the Shoulder	7.5.4.3
Shooting Jacket - Overlapping, Hanging loosely	7.5.4.2
Shooting Jacket - Pocket	7.5.4.8 f
Shooting Jacket - Position of the Sleeve	7.5.4.6
Shooting Jacket - Reinforcements	7.5.4.8
Shooting Jacket - Reinforcements: Butt Plate rest on the Shoulder	7.5.4.8 d
Shooting Jacket - Reinforcements: Elbows	7.5.4.8 b
Shooting Jacket - Reinforcements: Maximum Thickness	7.5.4.8 a
Shooting Jacket - Roughening	7.5.4.7
Shooting Jacket - Side Panel with horizontal Seams	7.5.4.5
Shooting Jacket - Size of Pocket	7.5.4.8 f
Shooting Jacket - Straighten Sleeves	7.5.4.6
Shooting Jacket - Use of sticky Substance, Liquid, etc...	7.5.4.7
Shooting left -Aiming right/ Shooting right -Aiming left	7.4.1.6e
Shooting Positions	7.6.1
Shooting Shoes	7.5.3
Shooting Shoes - Flexibility of the Soles	7.5.2.3
Shooting Shoes - Height	7.5.3.4
Shooting Shoes - Inner Soles	7.5.3.2
Shooting Shoes - Matching Pair	7.5.3.5
Shooting Shoes - Material Sole	7.5.3.2
Shooting Shoes - Material upper Part	7.5.3.1
Shooting Shoes - Measurements Table	7.5.3.6

CamScanner

Shooting Shoes - Walking Test	7.5.3.3
Shooting Trousers	7.5.5
Shooting Trousers - Braces (Suspenders)	7.5.5.1
Shooting Trousers - Closure Devices	7.5.5.1
Shooting Trousers - Closure Devices: Trousers Fly	7.5.5.2
Shooting Trousers - Closure Devices: Trousers Leg	7.5.5.2 C
Shooting Trousers - Drawing & Measurements	7.5.5.5
Shooting Trousers - Draw-strings, Zippers, Fasteners	7.5.5.1 / 7.5.5.2
Shooting Trousers - Loose around the Legs	7.5.5.1
Shooting Trousers - Reinforcements	7.5.5.3
Shooting Trousers - Thickness	7.5.5.1
Shooting Trousers - Top of Trousers	7.5.5.1
Shooting Trousers - Waist Band: Wide, Closure Devices	7.5.5.1
Shooting Trousers - Waist Belt	7.5.5.1
Shorts	7.5.1.3
Sights	7.4.1.6
Sights - Lenses, Lenses System, Light Filters	7.4.1.6
Slings	7.5.8.2
Specification Table - Rifle	7.7.5
Spirit Level - 300m Standard Rifle/ 10m Air Rifle	7.4.2.2
Spotting Telescopes	7.5.8.1
Standards for 300m Standard Rifle / 10m Air Rifle	7.4.2
Standards for all Rifles	7.4.1
Standing	7.6.1.3
Stiffness of Clothing	7.5.2.2
Telescopes	7.5.8.1
Thickness of clothing	7.5.2.1
Thickness - Table	7.5.2.1
Thumb Hole - 300m Standard Rifle / 10m Air Rifle	7.4.2.2
Thumb Rest - 300m Standard Rifle / 10m Air Rifle	7.4.2.2
Trigger Pull - 300m Standard Rifle	7.4.3 a
Underclothing	7.5.7
Visor or Caps	7.5.8.8
Walking Normally	7.5.3.3
Weights - 300m Standard Rifle / 10m Air Rifle	7.4.2.7
Women’s Events/ Men’s Events	7.1.4

CamScanner

NRA

CamScanner

PT. LOKTA KARYA PERBAKIN
KOMPLEK LAPANGAN TEMBAK SENAYAN
Jl. Gelora Senayan, Jakarta 10270 Telp. (021) 5735174 Fax. (021) 5736327

CamScanner

8
PISTOL RULES

FOR

10m Air Pistol

25m Pistol

25m Rapid-fire Pistol

25m Centre Fire Pistol

25m Standard Pistol

50m Pistol

CamScanner

8.1 **GENERAL** 363
8.2 **SAFETY** 363
8.3 **RANGE AND TARGET STANDARDS** 363
8.4 **EQUIPMENT AND AMMUNITION** 363
8.5 **ATHLETES SHOES** 367
8.6 **SHOOTING ACCESSORIES** 367
8.7 **SHOOTING EVENT PROCEDURES AND COMPETITION RULES** 368
8.8 **INTERRUPTIONS AND IRREGULARITIES** 374
8.9 **MALFUNCTIONS IN 25M EVENTS** 377
8.10 **FAILURE OF EST OR PAPER TARGET SYSTEMS** 380
8.11 **PISTOL EVENTS QUALIFICATION TABLE** 381
8.12 **PISTOL SPECIFICATION TABLE** 382
8.13 **PISTOL DRAWINGS AND MEASUREMENTS** 383
8.14 **INDEX** 384

NOTE:

Where figures and tables contain specific information, these have the same authority as the numbered rules.

CamScanner

8.1 GENERAL

8.1.1 These Rules are part of the ISSF Technical Rules and apply to all Pistol events.

8.1.2 All athletes, team leaders and officials must be familiar with the ISSF Rules and must ensure that these Rules are enforced. It is the responsibility of each athlete to comply with the Rules.

8.1.3 When a Rule refers to right-handed athletes, the reverse of that Rule refers to left-handed athletes.

8.1.4 Unless a Rule applies specifically to a men's or a women's event, it must apply uniformly to both men's and women's events.

8.1.5 If there is published a differing format for any Olympic event for Paris 2024, the Olympic format will take precedence over these rules.

8.2 SAFETY

SAFETY IS OF PARAMOUNT IMPORTANCE

ISSF Safety Rules are found in the General Technical Rules, Rule 6.2.

8.3 RANGE AND TARGET STANDARDS

Target and target standards are found in the General Technical Rules, Rule 6.3. Requirements for ranges and other facilities are found in the General Technical Rules, Rule 6.4.

8.4 EQUIPMENT AND AMMUNITION

8.4.1 Standards for All Pistols

8.4.1.1 **Grips.** For dimensions and details of grips see the **PISTOL SPECIFICATION TABLE** (8.12) and the **PISTOL CONFIGURATION DRAWINGS** (8.13).

a) Neither the grip nor any part of the pistol may be extended or constructed in any way that would allow it to touch beyond the hand. The wrist must remain visibly free when the pistol is held in the normal firing position. Bracelets, wristwatches, wristbands, or similar items are prohibited on the hand and arm that holds the pistol; and

b) Adjustable grips are permitted providing that when they are adjusted for the athlete's hand they conform to these Rules. Grip adjustments are subject to random Equipment Control checks to ensure that they conform with these Rules.

8.4.1.2 **Barrels**: see the **PISTOL SPECIFICATION TABLE** (8.12).

8.4.1.3 Sights

a) Only open sights are allowed. Sights using fibre optic, light enhancing or reflecting colour surfaces are prohibited. Optical, mirror, telescope, laser-beam, electronically projected dot sights etc. are prohibited;

b) Any aiming device programmed to activate the firing mechanism is prohibited;

c) No protective covering is permitted on front or rear open sights;

d) 10m and 25m Pistols must fit within the specified measuring boxes with

CamScanner

sights mounted on the pistols (see **PISTOL SPECIFICATION TABL**E, Rule 8.12);

e) Correcting lenses and/or filters must not be attached to the pistol; but

f) Corrective lenses or eyeglasses and/or filters or tinted lenses may be worn by the athlete.

8.4.1.4 **Electronic Triggers** are allowed providing:

a) All components are firmly attached to and contained within the frame or grip of the pistol;

b) The trigger is operated by the hand that holds the pistol;

c) All components must be included when the pistol is inspected by Equipment Control; and

d) The pistol with all components installed complies with the rules governing dimensions and weight for that event.

8.4.1.5 **Case Catchers** are allowed providing the pistol complies with these Rules (dimensions and weight) when attached.

8.4.1.6 **Movement or Oscillation Reduction Systems.** Any device, mechanism or system that actively reduces, slows or minimizes pistol oscillations or movements before the shot is released is prohibited.

8.4.2 **Measuring Trigger Pull Weight**

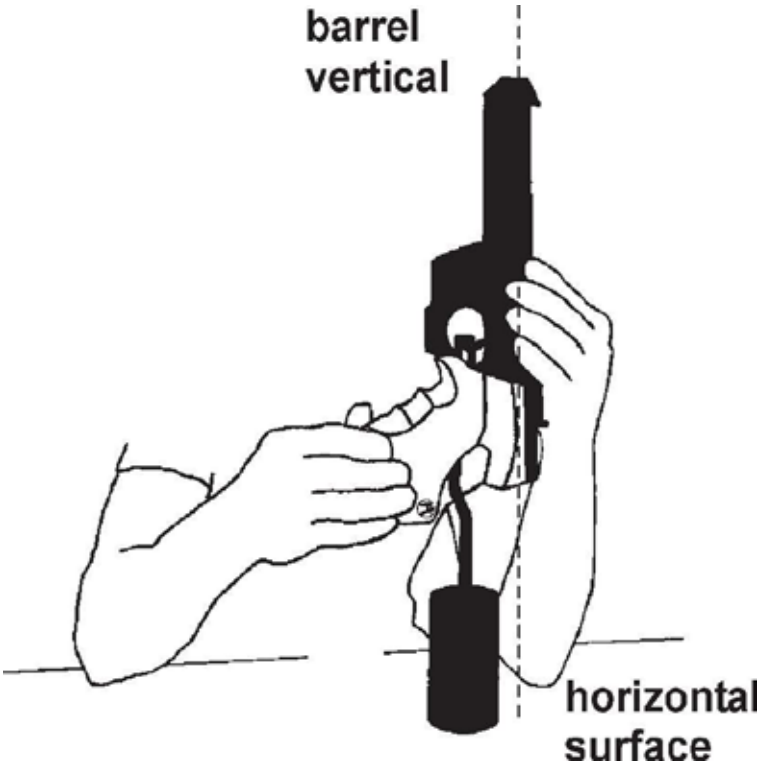

The weight of the trigger pull must be measured with the test weight suspended near the middle of the trigger (see illustrations) and the barrel held vertically. The weight must be placed on a horizontal surface and lifted clear of the surface. The tests must be conducted by Equipment Control officials. The minimum weight of the trigger pull must be maintained throughout the competition. A maximum of three (3) attempts to lift the weight are allowed. If it does not pass, it may only be resubmitted after adjustment. When testing air or

CamScanner

gas actuated pistols, the propellant charge must be activated.

8.4.2.1 Testing the weight of the trigger pull must be done according to the diagrams below. A weight with a metal or rubber knife-edge must be used. A roller on the trigger weight is not permitted. A dead weight must be used with no springs or other devices.

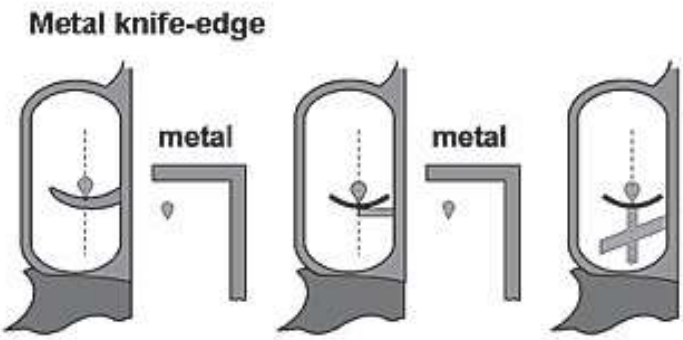

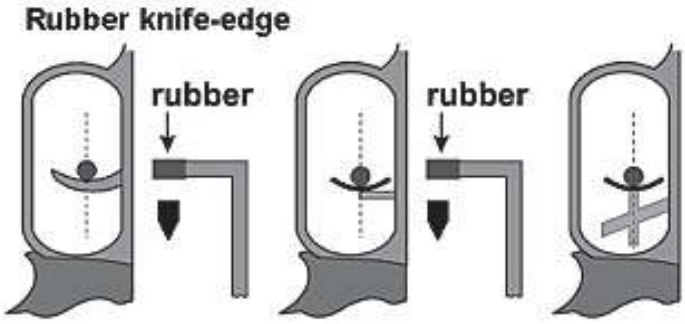

8.4.2.2 The appropriate trigger test weight must also be made available to athletes on the range before and during training and competition, and before Finals, to allow them to recheck the weight of the trigger pull on their pistols.

8.4.2.3 Random Trigger Weight control checks must be conducted immediately after the last series in all Qualification Rounds of 10m events and 25m stages. Checks in Standard Pistol will be made after 60 shots or, if the competition is fired in two stages (30 + 30 shots), checks will be done after each stage. At least one (1) athlete should be selected from each Range Section (or every eight (8) firing positions for Air Pistol) by the drawing of lots by the Equipment Control Jury. Equipment Control Officers must then conduct the tests before pistols are returned to their cases. A maximum of three (3) attempts to lift the weight are allowed. An athlete whose pistol fails this test or a selected athlete who fails to submit his pistol for testing must be disqualified.

8.4.3 **Standards for 25m, 50m and 10m Pistols**

8.4.3.1 **25m Rimfire and Centre Fire Pistols**

a) The Athlete must use the same pistol in all stages and series of an event unless it ceases to function;

CamScanner

b) The centre-line of the bore must pass above the web (between thumb and forefinger) of the hand holding the pistol in the normal firing position (see **PISTOL CONFIGURATION DRAWING**); and

c) The barrel length is measured as follows (see **PISTOL SPECIFICATION TABLE**).

Semiautomatic	From the muzzle to the breech face (barrel plus chamber).
Revolver	Barrel only (excluding cylinder).

8.4.3.2 **25m Rimfire Pistol**

Any calibre 5.6 mm (.22”) rimfire pistol, chambered for long rifle cartridges, except a single shot pistol, that conforms to the **PISTOL SPECIFICATION TABLE** may be used.

8.4.3.3 **25m Centre Fire Pistol**

Any centre fire pistol or revolver, except a single shot pistol, of calibre 7.62mm to 9.65mm (.30” - .38”) that conforms to the **PISTOL SPECIFICATION TABLE** may be used.

8.4.3.4 **50m Pistol**

a) Any calibre 5.6mm (.22 cal.) rimfire pistol chambered for long rifle cartridges may be used; and

b) Hand covers for 50m Pistols are permitted, providing they do not cover the wrist.

8.4.3.5 **10m Air Pistol**

Any 4.5mm (.177cal.) compressed air, CO2 or pneumatic air pistol that conforms to the **PISTOL SPECIFICATION TABLE** and **PISTOL CONFIGURATION DRAWING** may be used.

8.4.4 **Ammunition**

All projectiles used must be made only of lead or similar soft material. Jacketed projectiles are not permitted. The Jury may take samples from the athlete’s ammunition for checking.

Pistol	**Calibre**	**Other specifications**
10m Air Pistol	4,5mm (.177”)	
25m Centre Fire Pistol	7.62mm - 9.65mm (.30”-.38”)	High-power or Magnum ammunition is not allowed
50m Pistol	5.6mm (.22”)	Rimfire Long Rifle
25m Rimfire Pistol	5.6mm (.22”)	Rimfire Long Rifle For the Rapid-fire Pistol event: minimum bullet weight 2.53g = 39gr; minimum average velocity 250m/sec., measured 3.0m from the muzzle.

8.4.4.1 Velocity testing will be done with a chronograph (velocity measurement

CamScanner

device). The Equipment Control Jury must confirm the accuracy of the chronograph in accordance with testing procedures developed by the ISSF Technical Committee. A chronograph must be available to athletes on the range.

8.4.4.2 The ammunition of at least one (1) athlete from each relay must be tested. The Equipment Control Jury will supervise the selection of the athletes to be tested and collect the ammunition to be tested before each 30-shot Qualification stage. Athletes should have at least 50 rounds with them for each stage of competition. A Jury Member must take ten (10) cartridges from the ammunition that the athlete is using, place them in a labelled envelope, seal the envelope and hand it to the testing officer. After the stage is completed, the athlete selected must go to the testing station. The testing officer will load a magazine with three (3) cartridges and fire them in that athlete's pistol and record the muzzle velocity of each cartridge. If the average velocity is under 250.0m/sec, the test must be repeated. If the average velocity of the six (6) shots is less than 250.0m/sec, the athlete must be disqualified.

8.5 ATHLETES SHOES

8.5.1 Only low-sided shoes that do not cover the ankle bone (below the medial and lateral malleolus) are permitted. The sole must be flexible in the entire forward part of the foot;

8.5.2 Athletes may use removeable inner soles or inserts in their shoes, but any inserts must also be flexible in the forward part of the foot;

8.5.3 An ISSF approved testing device will be used to check sole flexibility;

8.5.4 To demonstrate that shoe soles are flexible, athletes must walk normally (heel toe) at all times while on the field of play. A warning will be given for the first offence, a two-point penalty or disqualification will be given for subsequent violations;

8.5.5 **Shoe Sole Flexibility Measurement Device.** The device used to measure shoe sole flexibility must be capable of accurately measuring how many degrees the shoe sole bends while bent with a precise amount of upward pressure; and

8.5.6 **Shoe Sole Flexibility Standard.** The soles of athletes' shoes must bend at least 22.5 degrees when a force of 15 Newton-Meters is applied to the heel area while the shoe is clamped in the testing device.

8.6 SHOOTING ACCESSORIES

8.6.1 **Spotting Telescopes**

The use of telescopes not attached to the pistol to locate shots or judge the wind is permitted in 25m and 50m events only.

8.6.2 **Pistol Transport Boxes**

Athletes may use pistol transport boxes to take pistols and equipment to the shooting ranges. During Finals, pistol transport boxes or equipment bags must not remain on the FOP.

8.6.3 **Pistol Support Stands**

Athletes may place pistol support stands or boxes on the bench or table to rest their pistols between shots. The total height of the bench or table with

CamScanner

a support stand or box on it may not exceed 1.00m (see Rule 6.4.11.10, maximum bench height is 1.00m). During Elimination or Qualification competitions, a pistol transport box (Rule 8.6.2) may be used as a pistol support stand, provided the total height of the bench or table plus the box does not exceed 1.00m. During Finals, a pistol transport box may not be used as a pistol support stand.

8.7 SHOOTING EVENT PROCEDURES AND COMPETITION RULES

8.7.1 Firing Position

The athlete must stand free, without any artificial or other support, with both feet and/or shoes completely within the firing point. The pistol must be held and fired with one (1) hand only. The wrist must be visibly free of support.

8.7.2 Ready Position

In the 25m Rapid-fire Pistol event, 25m Pistol and 25m Centre Fire Pistol Rapid-fire Stages and 25m Standard Pistol 20sec. and 10sec. series, shooting must start from the READY position (see drawing). In the READY position, the athlete's arm must point downward at an angle of not greater than 45 degrees from the vertical. The arm with the pistol must not be pointed at the ground within the forward edge of the firing point. After the series begins, the pistol may not rest on the bench or shooting table. The arm must remain in this position while waiting either for the appearance of the target or, when EST are used, for the green light(s) to come on.

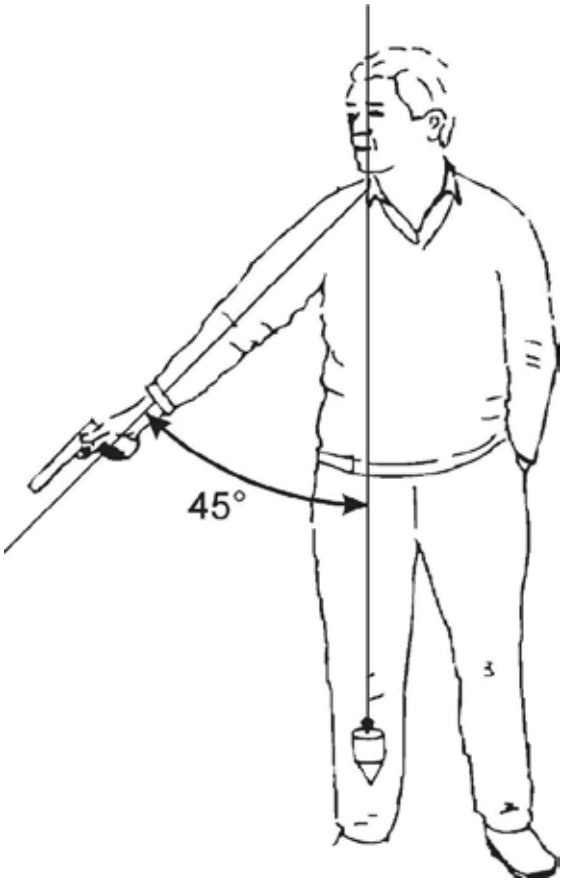

CamScanner

8.7.3 **Ready Position Violations**

A READY position violation occurs when an athlete in the 25m Rapid-Fire Pistol event or in the Rapid-Fire Stage of the 25m Pistol or 25m Centre Fire Pistol event, or in the 20 second or 10 second stages of the 25m Standard Pistol event:

a) Raises his arm too soon and this movement becomes part of the arm lift (continuous motion);

b) Does not lower his arm sufficiently; or

c) Raises his arm above 45 degrees before the light changes or the targets start to turn.

8.7.4 **Procedures for Ready Position Violations**

WHEN A READY POSITION VIOLATION OCCURS;

a) The athlete must be warned by a Jury Member and the series must be recorded and repeated;

b) When the series is repeated in the 25m Rapid-Fire Pistol event, the athlete must be credited with the lowest value hit on each target. In all other 25m events, the athlete must be credited with the five (5) lowest value hits in the two (2) series (or three (3) series should a malfunction be involved);

c) If the fault is repeated in the same stage of 30 shots in the 25m Rapid-fire Pistol event, or in the Rapid-fire Stage of the 25m Pistol or 25m Centre Fire Pistol event, or in the combined 20 second and 10 second stages of the 25m Standard Pistol event, the same procedure must be applied and the athlete must be penalized by a deduction of two (2) points from his score; and

d) If a third violation of this Rule occurs, the athlete must be disqualified.

8.7.5 **Pistol Events**

See ISSF RECOGNIZED SHOOTING EVENTS Rule 3.3 and Rule 8.11, PISTOL EVENT TABLE.

8.7.6 **Competition Rules**

8.7.6.1 **Preparation Time for 25m Events**

a) Athletes should report to their Range Section, but must wait to be called to their firing points;

b) 13 minutes before the Preparation Time starts, and after any preceding relay is finished, the CRO will call the athletes to the line. With the permission of the CRO athletes may remove their pistols from their boxes and handle their pistols; **safety flags must remain in the pistols**. Holding and aiming exercises are allowed

c) Pre-competition checks by the Jury and Range Officers must be completed promptly before the Preparation Time starts;

d) Preparation Time begins with the command **"PREPARATION TIME BEGINS NOW."** During the Preparation Time the targets must be visible, facing the athletes. During the Preparation Time athletes may remove safety flags and handle their pistols, dry fire and carry out holding and aiming exercises on the firing line; and

e) **Preparation Time** allowed before the competition starts is as follows:

CamScanner

25m Standard Pistol	3 minutes
25m Precision Stages	3 minutes
25m Rapid-fire Stages or Events	3 minutes

8.7.6.2 **Specific Rules for 25m Events**

a) In all 25m events, timing must start at the moment the green lights come on (or the targets begin to face) and stop when the red lights come on (or the targets begin to turn away); when EST are used, the green lights are on for the required time +0.1 sec.;

b) The turning of the targets or the switching of lights may be controlled by a Target Operator who is located behind the firing line. His position must not disturb the athlete, but it must be within the sight and hearing of the Range Officer. The targets may also be operated by the Range Officer by means of a remote control system;

c) **"LOAD."** In all 25m Training or Qualification events, only one (1) magazine or pistol may be loaded with not more than five (5) cartridges on the command **"LOAD."** Nothing else is allowed to be inserted into the magazine or cylinder;

d) If an athlete in Qualification loads his pistol with more cartridges than he is allowed to load (full series or series completion) or he loads more than one (1) magazine on any command **"LOAD"** he must be penalized by the deduction of two (2) points from his score in that same series. If the athlete violates this rule in Training, he must be directed to unload his pistol, insert a safety flag and stop training.

e) An athlete who fires a shot or shots before the command **"LOAD"** must be disqualified; and

f) **"UNLOAD."** In all events, after the series or stage has been completed, the command **"UNLOAD"** must be given. In any case, immediately upon completing a series (unless there is a pistol malfunction), or when ordered, the athlete must unload the pistol.

8.7.6.3 **Specific Rules for the 25m Rapid-fire Pistol Qualification Event**

a) The event is 60 competition shots divided into two (2) stages of 30 shots each. Each stage includes six (6) series of five (5) shots each, two (2) series in eight (8) seconds, two (2) series in six (6) seconds and two (2) series in four (4) seconds. In each series, one (1) shot is fired at each of the five (5) targets within the specified time limit for the series;

b) Before the beginning of each stage, the athlete may fire one (1) Sighting series of five (5) shots in eight (8) seconds;

c) All shooting (Sighting and MATCH firing series) is by command. Both athletes in the same Range Section must fire at the same time, but organizers may have more than one (1) Range Section to fire simultaneously under centralized commands;

d) If a pistol of any of the athletes firing together has a malfunction, the malfunction series must be re-fired by those concerned in the same time stage with the following regular series. The final series of this stage will be fired immediately after all other athletes firing together have completed this time stage. Each Range Section may operate independently;

CamScanner

e) Before the Range Officer gives the command **"LOAD,"** he must call out the series time (i.e. **"eight second series," "six second series,"** etc.), or the series time must be indicated in some manner such as using a numbered sign of sufficient size to be visible to the athlete. When the Range Officer gives the command **"LOAD,"** athletes must prepare themselves for their series within one (1) minute;

f) When one (1) minute has expired, the Range Officer will give the command:

"ATTENTION"	The red lights must be switched on (if paper targets are used, they must be turned to the edge-on position) and the athletes must bring their pistols to the READY position.
	When EST are used, the red lights will be switched on. After a delay of 7 sec. +/- 0.1sec. the green lights will come on for the required time +0.1sec. When paper targets are used, the targets will be turned to the edge-on position. After a delay of 7sec. (+/- 0.1sec.), the targets will be turned to face the athletes.

g) Before each series, the athlete must lower his arm and adopt the **READY** position;

h) The green lights come on (if paper targets are used, the targets turn to face the athletes) seven (7) seconds+/- 0.1sec. after the command **"ATTENTION;"**

i) Pistols may be raised the moment the green lights come on (or the targets begin to face);

j) The athlete should fire five (5) shots during each series;

k) A series is considered as having started after the command **"ATTENTION"**;

every shot fired after that must be counted as a MATCH shot;

l) After the firing of each series, there should be a pause of at least one (1) minute before the next command **"LOAD;"** and

m) There should be a minimum of 30min., or longer if the programme permits, between the scheduled start times for relays; the published start time for successive relays should be adequate to allow for these relays to start at the published time.

8.7.6.4 **Specific Rules for 25m Pistol and 25m Centre Fire Pistol**

The programme for each event is 60 MATCH shots divided into two (2) stages of 30 shots each:

Stage	**Number of series and shots**	**Time limit for each Sighting or MATCH series**
Precision Stage	six (6) series of five (5) shots	five (5) minutes

CamScanner

Rapid-fire Stage	six (6) series of five (5) shots	see below

a) Before the beginning of each stage, the athlete may fire one (1) Sighting series of five (5) shots;

b) All athletes will fire the Sighting series as well as all MATCH series at the same time and on the same commands:

c) The Range Officer must give the command **"LOAD"** BEFORE EACH SERIES; after the command **"LOAD,"** the athlete must prepare himself within one (1) minute with the correct number of cartridges;

d) After the command **"UNLOAD"** is given at the end of a sighting or MATCH series, there must be a pause of one (1) minute before the Range Officer gives the command **"LOAD"** to start the next series;

e) A series is considered as having started from the moment the red light is switched on, or the targets turn away from the athlete after the command "ATTENTION", every shot fired after that must be counted as a MATCH shot.

f) Firing will begin on the appropriate command or signal, the commands for stationary targets are "START" or the signal of a horn and "STOP" or a horn signal, the signals for turning targets are when the targets turn towards or away from the athlete; the signals for EST are the red and green lights.

g) **Precision Stage**

"FOR THE SIGHTING SERIES - LOAD"	All athletes load within a time of one (1) minute.
"FOR THE FIRST/ NEXT COMPETITION SERIES - LOAD"	All athletes load within a time of one (1) minute.
"ATTENTION"	When EST are used, the red lights will be switched on. After a delay of 7sec. ±0.1sec. the green lights will come on. When paper targets are used, the targets will be turned to the edge-on position. After a delay of 7sec. ±0.1sec., the targets will be turned to face the athletes.
"UNLOAD'	

h) All athletes must complete the Precision Stage before the Rapid-Fire Stage may begin;

i) **Rapid Stage**

During each series in the Rapid-Fire Stage, the target is shown five (5) times for 3.0sec. -0.0 to +0.2sec. or, when EST are used, the green lights come on for 3.1sec. for each shot; the time between each appearance (the edge-on position) or, when EST are used, when the red lights are on, must be seven (7)sec. ± 0.1sec. one (1) shot only will be fired during each appearance of the target; when EST are used, the green light must go off after 3.1sec., but the target must continue to record a valid shot for an additional 0.2sec. "after time" in accordance with Rule 6.4.13

CamScanner

“FOR THE SIGHTING SERIES - LOAD”	All athletes load within a time of one (1) minute.
“FOR THE FIRST/ NEXT COMPETITION SERIES - LOAD”	All athletes load within a time of one (1) minute.
“ATTENTION”	When EST are used, the red lights will be switched on. After a delay of 7sec.±0.1sec. the green lights will come on. When paper targets are used, the targets will be turned to the edge-on position. After a delay of 7sec. ±0.1sec., the targets will be turned to face the athletes.
“UNLOAD”	

j) Before each shot the athlete must lower his arm and adopt the READY position in accordance with Rule 8.7.2;

k) The pistol must not rest on the bench, or shooting table, during the Rapid stage series

8.7.6.5 **Specific Rules for the 25m Standard Pistol Event**

The event programme is 60 MATCH shots divided into 3 stages of 20 shots each. Each stage consists of 4 series of 5 shots:

Stage	Number of series and shots	Time limit for each series
1	four (4) series of five (5) shots	150sec.
2	four (4) series of five (5) shots	20sec.
3	four (4) series of five (5) shots	10sec.

a) Before the beginning of MATCH firing, the athlete may fire one (1) Sighting series of five (5) shots within a time limit of 150 seconds;

b) Before the Range Officer gives the command **“LOAD,”** he must call out the series time (such as 150sec. series, or 20sec. series etc.), or the series time must be indicated in some manner such as using a numbered sign of sufficient size to be visible to the athlete;

c) When the Range Officer gives the command **“LOAD,”** the athlete must prepare himself immediately for the series within one (1) minute;

d) When one (1) minute has expired, the Range Officer will give the command:

“ATTENTION”	When EST are used, the red lights will be switched on. After a delay of 7sec. ±0.1sec. the green lights will come on. When paper targets are used, the targets will be turned to the edge-on position. After a delay of 7sec. ±0.1sec, the targets will be turned to face the athletes.

CamScanner

e) Before each series, except in the 150sec. series, the athlete must lower his arm and adopt the READY position;

f) A series is considered as having started from the moment the red light is switched on, or the targets turn away from the athlete after the command **"ATTENTION,"** every shot fired after that must be counted as a MATCH shot;

g) After the command **"UNLOAD"** is given at the end of a sighting or MATCH series, there must be a pause of one (1) minute before the Range Officer gives the command **"LOAD"** to start the next series.

h) When it is necessary to conduct the event in two parts, each part must consist of:

Stage	Number of series and shots	Time limit for each series
1	two (2) series of five (5) shots	150sec.
2	two (2) series of five (5) shots	20sec.
3	two (2) series of five (5) shots	10sec.

j) Before the beginning of each part of the event, the athlete may fire one (1) sighting series of five (5) shots within a time limit of 150sec.

8.8 INTERRUPTIONS AND IRREGULARITIES

8.8.1 Interruptions in 25m Events and Stages

If shooting is interrupted for safety or technical reasons (without being the fault of the athlete):

a) If the elapsed interruption time is **more than 15min**., the Jury must allow one (1) extra sighting series of five (5) shots;

b) In the 25m Rapid-fire Pistol and in the 25m Standard Pistol event, if the series is interrupted it must be annulled and repeated. The repeated series must be recorded and credited to the athlete;

c) In the 25m Pistol and the 25m Centre Fire Pistol events, the interrupted series must be completed. The completed series must be recorded and credited to the athlete; and

d) In the Precision Stage the time limit is one (1) minute for every shot to be fired to complete the series.

8.8.2 Irregular Shots in 25m Events and Stages

8.8.2.1 Too Many Competition Shots Fired (25m)

If an athlete fires more MATCH shots on a target than the **Pistol Events Qualification Table** (Rule 8.11) specifies, or more than one (1) shot at one (1) appearance of the target in a Rapid-Fire Pistol Series, the highest value hit(s) must be disregarded from the score of that target;

a) Two (2) points must also be deducted from the score of that series for each extra shot fired in the series;

b) This penalty is in addition to the penalty of two (2) points that may be

CamScanner

imposed when an athlete loads more than the authorized number of cartridges; and

c) Two (2) points must be deducted on every occasion if two (2) shots are fired during a single exposure of the target in the Rapid-Fire stages of the 25m Pistol and the 25m Centre Fire Pistol events.

8.8.2.2 **Too Many Sighting Shots Fired (25m)**

If an athlete **fires more Sighting shots** than are provided for in the **Pistol Events Qualification Table** (Rule 8.11), or are approved by the Range Officer or Jury, he must be penalized by the deduction of two (2) points from the first series of his MATCH score for each excessive sighting shot fired. This penalty is in addition to the penalty of two (2) points that may be imposed when an athlete loads more than the authorized number of cartridges.

8.8.2.3 **Early Or Late Shots (25m)**

a) Any shot(s) fired accidentally after the command **"LOAD,"** but before the start of a MATCH series, must not be counted in the competition and two (2) points must be deducted from the following series. This penalty must not apply in the Sighting series. The athlete who fired accidentally must not continue, but must wait until the other athletes finish that series and then report this to the Range Officer as if he had a malfunction. The Range Officer will then permit him to continue and repeat the series in the same time stage with the following regular series. The final series of the stage will be fired immediately after all athletes have completed that time stage. If this procedure is not followed and the athlete continues the original series, the accidentally fired shot will be scored as a miss (zero); and

b) In a Precision Stage, if a shot(s) is fired after the command or signal **"STOP,"** that shot must be counted as a miss. If the shot(s) cannot be identified the highest value hit(s) must be deducted from the score of that target and scored as miss(es).

8.8.2.4 **Crossfires on Sighting Targets (25m)**

If an athlete fires a Sighting shot on the sighting target of another athlete, he must not be allowed to repeat the shot, but will not be penalized. If it cannot be established clearly and quickly which hit(s) belong to whom, the athlete who is not at fault has the right to repeat the sighting shot(s).

8.8.3 **Incorrect Range Commands (25m)**

a) If, because of an incorrect command and/or action by a Range Officer, the athlete is not ready to fire when the signal to fire is given, he must hold his pistol pointing down range and raise his free hand, and immediately after the series report this to a Range Officer or Jury Member; and

b) If the claim is considered justified, the athlete must be allowed to fire the series; or

c) If the claim is considered not justified, the athlete may fire the series, but must be penalized by the deduction of two (2) points from the score of that series; or

d) If the athlete has fired a shot after the incorrect command and/or action, the protest must not be accepted.

8.8.4 **Disturbances**

Should an athlete consider that he was disturbed while firing a shot, he must

CamScanner

hold his pistol pointing down range and immediately inform the Range Officer or Jury Member by raising his free hand. He must not disturb other athletes.

8.8.4.1 **IF THE CLAIM IS CONSIDERED JUSTIFIED:**

a) The series (25m Rapid-fire Pistol, 25m Standard Pistol), must be annulled and the athlete may repeat the series; and

b) The shot (25m Pistol and 25m Centre Fire Pistol) must be annulled and the athlete may repeat the shot and complete the series.

c)

8.8.4.2 **IF THE CLAIM IS CONSIDERED UNJUSTIFIED:**

a) If the athlete has finished his series, the shot or series must be credited to the athlete;

b) If the athlete has not finished his series due to the claimed disturbance, the athlete may repeat or complete the series. Scoring and penalties are as follows;

c) In the **25m Rapid-fire Pistol Event** the series may be repeated and the score must be recorded as the total of the lowest value hit on each target;

d) In the **25m Standard Pistol Event** the series may be repeated and the score must be recorded as the total of the five (5) lowest value hits on the target;

e) In the **25m Pistol and 25m Centre Fire Pistol Events** the series may be completed and the score must be recorded;

f) Two (2) points must also be deducted from the score of the repeated or completed series; and

g) In any repeated series, all five (5) shots must be fired at the target. Any shot(s) not fired or not hitting the target must be scored as a miss(es).

8.8.5 **Timing Irregularity Claims**

8.8.5.1 If an athlete considers that the time elapsed between the command specified in the Rules and the green light coming on or the facing of the targets was too fast or too slow, and therefore not according to the time specified in the Rules, he must hold his pistol pointing down range and immediately inform a Range Officer or Jury Member by raising his free hand. He must not disturb other athletes.

a) If it is found that his **claim is justified**, he may begin the series again; or

b) If his claim is found **not justified**, he may fire the series, but a two (2) point penalty must be deducted from the score of that series; and

c) Once the athlete has **fired the first shot** in the series, such a claim must not be accepted.

8.8.5.2 If an athlete considers that the **time of the series was too short**, he may inform a Range Officer immediately after finishing the series.

a) The Range Officer and/or Jury must verify the timing of the mechanism; and

b) If it is confirmed that there has been an error, the protesting athlete's series must be annulled and repeated; or

CamScanner

c) If the claim is considered not justified, the result of the series must be credited to the athlete and recorded.

8.9 MALFUNCTIONS IN 25M EVENTS

8.9.1 Malfunctions during a sighting series may not be claimed, however, an athlete may clear the malfunction and continue to shoot the unfired shots within the specified time for the sighting series for that event. Only one (1) malfunction (either ALLOWABLE or NON-ALLOWABLE) may be claimed during each MATCH stage(s) of a 25m Pistol event as follows:

a) Once in each 30 shot stage of the 25m Rapid-Fire Pistol, 25m Pistol and 25m Centre Fire Pistol events;

b) Once in the 150sec. stage and once in the combined twenty (20)sec. and ten

(10)sec. stages of the 25m Standard Pistol event;

c) The appropriate Malfunction Form (RFPM or STDP) must be used to score repeated malfunction series. Malfunction Forms are found in the General Technical Rules, Rule 6.18.

d) Malfunctions (ALLOWABLE or NON-ALLOWABLE) in 25m Finals will be decided according to 6.17.4 m) or 6.17.5 l).

8.9.2 **Repairing or Replacing a Broken Gun**

Should a pistol break or cease to function, the athlete is allowed to repair or replace the pistol. In all cases, the Chief Range Officer must confirm that the pistol cannot function safely and the Jury must be informed.

a) An athlete is allowed a maximum of 15min. to repair or replace a pistol in order to resume the competition;

b) If the repair is likely to take more than 15min., the athlete, at his request, may be granted more time by the Jury;

c) If extra repair time is granted, he will complete the competition at a time and place determined by the Jury or he may continue to fire with another pistol of the same type of mechanism (semi-automatic or revolver) and of the same calibre; and

d) In the 25m events the Jury must allow one (1) extra sighting series of five (5) shots.

8.9.3 **Malfunctions in 25m Pistol Events**

a) If a shot has not been fired due to a malfunction, and if the athlete wishes to claim a malfunction, he must hold his pistol pointing down range and must retain his grip. Only the tip of the barrel may rest on the bench, if the magazine is not of the type that is loaded from the barrel end, but the magazine must be clearly not touching the bench or hand and immediately inform a Range Officer by raising his free hand. He must not disturb other athletes.

b) An athlete may try to correct a malfunction and continue the series, but after attempting any correction, he may not claim an Allowable Malfunction unless the firing pin has broken, or any other part of the pistol is damaged sufficiently to prevent the pistol from functioning.

CamScanner

8.9.4 **Types of Malfunctions**

8.9.4.1 **ALLOWABLE MALFUNCTIONS (AM) are:**

a) A bullet is lodged in the barrel;

b) The trigger mechanism has failed to operate;

c) There is an undischarged cartridge in the chamber and the trigger mechanism has been released and operated;

d) The cartridge case has not been extracted or ejected; this applies even if a case catcher is used;

e) The cartridge, magazine, cylinder, or other part of the pistol has jammed;

f) The firing pin has broken, or any other part of the pistol is damaged sufficiently to prevent the pistol from functioning;

g) The pistol fires automatically without the trigger being released. The athlete must stop firing immediately and must not continue to use such a pistol without the permission of a Range Officer or a Jury Member. When using electronic scoring targets, the first shot will be scored by the system and this will be credited to the athlete. When using paper targets, should the automatically fired shot(s) hit the target, the hit(s) found highest up on the target must be disregarded before the repeat series. After any repeat series, all the shot(s), except those that were disregarded on the one (1) target concerned, must be included to establish the score; or

h) The slide jams or the empty case is not ejected, this applies even if a case catcher is used.

8.9.4.2 **NON-ALLOWABLE MALFUNCTIONS (NAM) are:**

a) The athlete has touched the breech, mechanism or safety catch or the pistol has been touched by another person before being inspected by the Range Officer;

b) The safety catch has not been released;

c) The athlete did not load his pistol;

d) The athlete loaded fewer cartridges than prescribed;

e) The athlete did not allow the trigger to return far enough after the previous shot;

f) The pistol was loaded with the wrong ammunition;

g) The magazine was not inserted correctly, or had fallen out during shooting unless this is due to damage to the mechanism; or

h) The malfunction is due to any cause that could reasonably have been corrected by the athlete.

8.9.4.3 **Determining the Cause of a Malfunction**

If the external appearance of the pistol does not show an obvious reason for the malfunction and there is no indication, and the athlete does not claim that there may be a bullet stuck in the barrel, the Range Officer must take the pistol without interfering with or touching the mechanism, point the pistol in a safe direction and pull the trigger one time only to determine whether the trigger mechanism had been released.

CamScanner

a) If the pistol is a revolver, the Range Officer must not pull the trigger unless the hammer is in the cocked position;

b) If the pistol does not discharge, the Range Officer must complete the examination of the pistol to determine the cause of the malfunction and to decide whether or not the malfunction is allowable; and

c) The Range Officer decides, after inspection of the pistol, that there is an ALLOWABLE MALFUNCTION or a NON-ALLOWABLE MALFUNCTION.

8.9.4.4 In the case of a **NON-ALLOWABLE MALFUNCTION**, every shot that is not fired will be scored as a miss (zero). No re-fire or completion is permitted. Only the values of shots fired will be credited to the athlete. The athlete may continue to shoot the remainder of the event.

8.9.4.5 **ALLOWABLE MALFUNCTION PROCEDURES** - 25m Rapid-Fire Pistol and 25m Standard Pistol

a) If an ALLOWABLE MALFUNCTION occurs during a 25m Rapid-Fire Pistol Men or 25m Standard Pistol Men series, record the scores of the shots that were fired on first line of the Malfunction Form (Form RFPM or Form STDP); and

b) The athlete must fire all five (5) shots at the target(s) in any repeat series. After the repeat series, record the scores of all shots fired on the second line of the Malfunction Form; any shots not hitting the target or late shots, fired or unfired, must be scored as zero(s); or

c) If a second malfunction occurs in the repeat series, record the scores of the fired shots in the repeat series on the second line of the Malfunction Form. Then add zeros to the line (first series or repeat series) that has scores for the most fired shots to ensure that one line has five scores. These added zeros must be counted in determining the score for that series; and

d) Determine the scores of the five shots to be counted for the series and record them on the third line of the Malfunction Form ("Final Score"):

- RFPM: enter the lowest value scores on each of the five targets and total scores.
- STDP: enter the five lowest value scores from all recorded shots, including any zeros that were added to one of the two lines, and total those scores.

8.9.4.6 **ALLOWABLE MALFUNCTION PROCEDURES** - 25m Pistol and 25m Centre Fire Pistol

Precision and Rapid-Fire Stages:

a) The number of shots is recorded and the series may be completed;

b) Shot(s) to complete the series (series completion) must be fired in the next competition series; in the Precision Stage a time of one (1) minute will be allowed for each shot to be fired; in the Rapid-Fire Stage, the series completion must start on the first exposure;

c) Any shot(s) not fired or not hitting the target must be scored as miss(es) (zero(s);

d) The five-shot series must be scored in the normal manner; and

e) Use Form IR to report series completion.

CamScanner

8.10 FAILURE OF EST OR PAPER TARGET SYSTEMS

8.10.1 Failure of ALL targets on a Range or Range Section

a) The expired shooting time must be recorded by the Chief Range Officer and the Jury;

b) All completed MATCH shots of each athlete must be counted and recorded. In the event of a range power supply failure, this may involve waiting until power is restored to enable the number of shots registered by the target, not necessarily on the firing point monitor, to be established;

c) After the targets are repaired and the full range, or Range Section, is in operation, an additional Sighting series and a one (1) minute pause will be given before starting the completion of the series in accordance with the following rules;

d) **25m Pistol and 25m Centre Fire Pistol Events.** The athletes will COMPLETE the series of five shots in the same way as for an ALLOWABLE MALFUNCTION. The athlete should fire the number of shots that had not been recorded by the target when the failure occurred.

e) **25m Standard Pistol and 25m Rapid-Fire Pistol Events.** If the series was not completed and recorded, it will be annulled and repeated. If the five (5) shots were recorded for any athlete, the series score will be recorded and no repetition will be permitted by that athlete.

8.10.2 Failure of a Single Target or Target Group

If there is a failure of a single target or group of five targets (25m Rapid-Fire Pistol event) that cannot be repaired immediately, the athlete will be moved to another firing position in the same, or a following relay. After the problem is resolved, a separate sighting series and a one (1) minute pause will be given before the firing of the next series in accordance with the rule above (8.10.1.c).

8.10.3 Failure to Register or Display a Shot

If there is a complaint concerning **failure to register or display a shot on the monitor(s) of 25**m Electronic Scoring Target systems, or the monitor shows a zero (0) that was not expected:

a) In the Precision Stages of 25m Pistol and 25m Centre Fire Pistol events and in the 150sec. series of the 25m Standard Pistol event, the athlete must immediately (before the next shot) inform the nearest range official of the failure;

b) In the Rapid-Fire Stages of the 25m Pistol and 25m Centre Fire Pistol events and in the Rapid-Fire Stages of the 25m Standard Pistol event, the athlete must continue the five (5) shot series and must inform the nearest range official of the failure immediately after the end of the series;

c) The athlete will then be directed to complete the series at a time decided by the Jury; and

d) There will be no repeat series. The score will be determined by the RTS Jury. After the series has been completed, the Procedure for Examination of Electronic Scoring Targets (6.10.8) will be applied.

CamScanner

8.11 PISTOL EVENTS QUALIFICATION TABLE

Event	Men/ Women	Number of shots	Number of Shots per competition target (paper)	Number of Sighting Targets (paper)	Number of Sighting Shots	Scoring and Patching Paper Targets	Time Limits	Preparation and Sighting Time
10m Air Pistol	Men & Women	60	1	4	Unlimited during Preparation and Sighting Time	In the RTS Office	75 minutes (60) 90 minutes (60), if EST are not available	15 Minutes
10m Mixed Team	Men & Women	2x30	1	4	Unlimited during Preparation and Sighting Time	In the RTS Office	30 minutes, 60 minutes if EST are not available	10 Minutes
50m Pistol	Men	60	5	2	Unlimited during Preparation and Sighting Time	In the RTS Office	1 hour 30 minutes, 1 hour 45 minutes, if EST are not available	15 Minutes
25m Rapid-fire Pistol	Men	60	7 shots per target per stage (1 sighting series plus 6 Match series) New targets after each stage		1 series of 5 shots in 8 seconds in each stage	After every 5 shot series	2 stages of 30 shots of 2 five-shot-series in 8, 6, 4 seconds	3 Minutes Preparation
25m Pistol	Women	60	10	1	1 series of 5 shots in each stage	After every 5 shot series	Precision Stage: 5min. each for 6 5-shot series. Rapid-fire Stage: 6 5-shot series in rapid-fire programme.	Precision Stage: 3 Minutes Preparation Rapid-fire Stage: 3 Minutes Preparation
25m Centre Fire Pistol	Men	60	10					
25m Stan-dard Pistol	Men	60	10		1 series of 5 shots in 150 seconds stage only		4 five-shot-series in 150, 20, 10 seconds	

CamScanner

8.12 PISTOL SPECIFICATION TABLE

Pistol Type	1) Pistol Weight 2) Trigger Pull	Measuring Box (mm)	Barrel Length Sight Radius	Grips	Other specifications
10m Air Pistol	1) 1500g max. 2) 500g min.	420 x 200 x 50	Box Size Only	See below	May only be loaded with one (1) pellet. Ported barrels and perforated barrel attachments are allowed.
50m Pistol	No Restriction No Restriction	No Restriction	No Restriction No Restriction	Special grips are permitted	May only be loaded with one (1) cartridge. Hand covers will be permitted, providing they do not cover the wrist.
25m Rimfire Pistol	1) 1400g max. 2) 1000g min.	300 x 150 x 50	max. 153mm max. 220mm	See below	Compensators, muzzle brakes, perforated barrels or any device(s) functioning in a similar manner are not allowed.
25m Centre Fire Pistol	1) 1400g max. 2) 1000g min.				

a) 10m Air Pistol Grips: No part of the grip, frame or accessories may touch any part of the wrist. The heel rest must extend at an angle of not less than 90 degrees to the grip. This applies to the heel rest in front and behind the grip as well as on the sides.
Any upward curvature of the heel and/or thumb rest and/or a downward curvature of the side opposite the thumb is prohibited. The thumb rest must allow free upward movement of the thumb. The grip must not encircle the hand. Curved surfaces on the grips or frame, including the heel and/or thumb rest, in the longitudinal direction of the pistol are permitted.

b) 25m Pistol Grips: Note a) applies. In addition, the rear part of the frame or grip which rests on top of the hand between the thumb and the forefinger, must not be longer than 30mm from the point where the grip first touches the top of the hand forward to the deepest part of the grip. The back (rear) part of the grip must be cut so that it angles upward from that point by not less than 45 degrees.

c) The weight of the pistol is measured with all accessories, including balancing weights and unloaded magazine.

d) Measuring Box: The pistol is measured with all accessories in place (if an Air Pistol is used with a magazine it may be measured with the magazine removed). A manufacturing tolerance of the rectangular Measuring Box of 0.0mm to + 1.0mm in each dimension is permitted.

CamScanner

8.13 PISTOL DRAWINGS AND MEASUREMENTS

For 10m and 25m Pistols

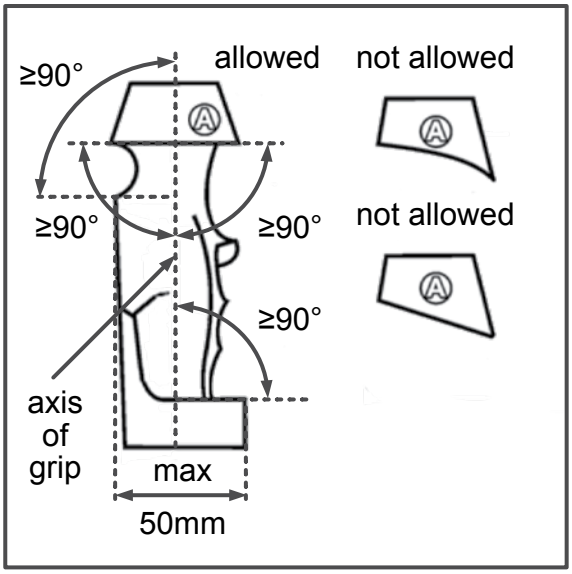

For 10m and 25m Pistols

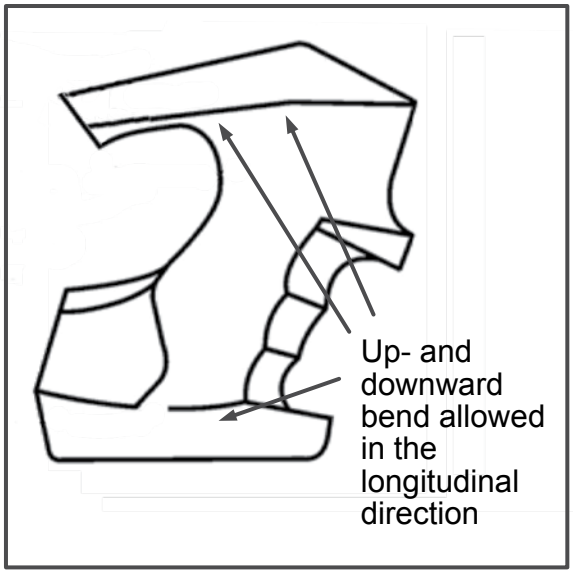

For 25m Pistols Only

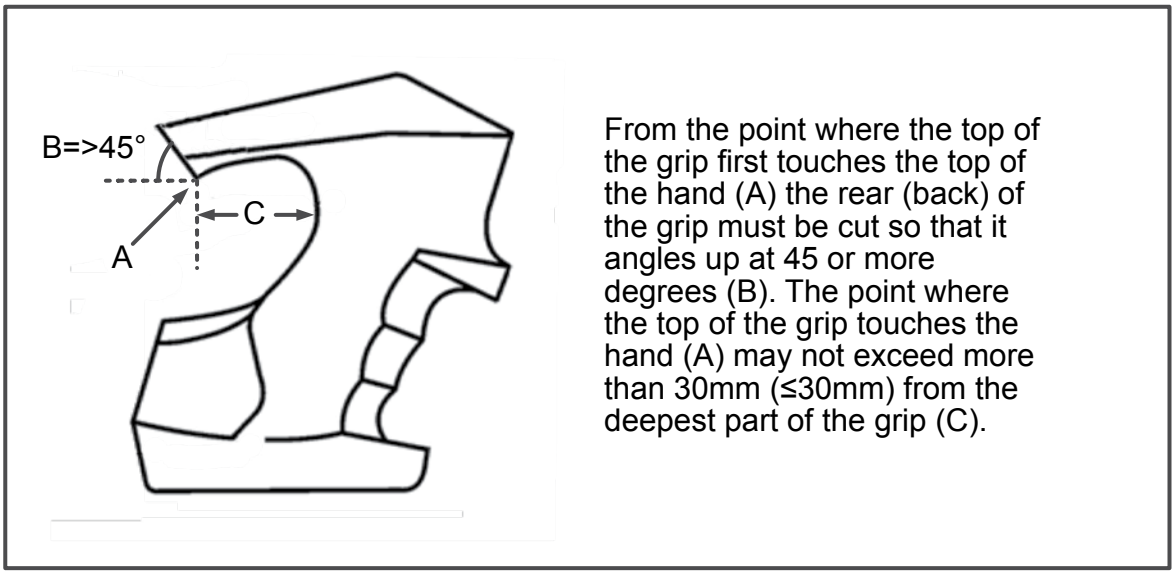

For 25m Pistols Only

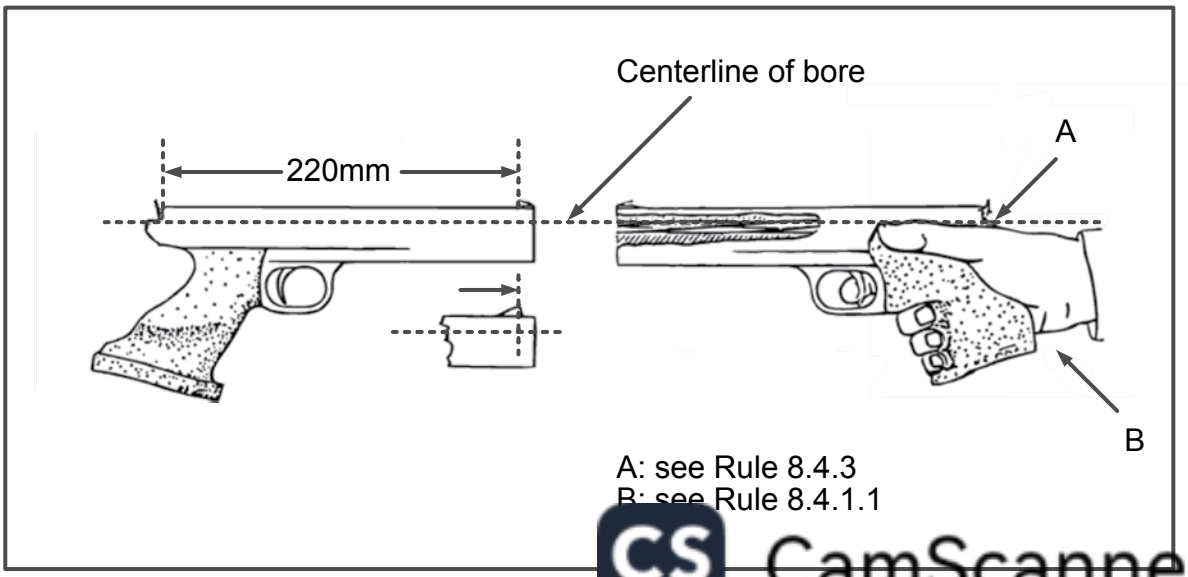

CamScanner

8.14 INDEX

25m Events	8.11
25m Events -Allowable Malfunctions (AM)	8.9.4.1
25m Events - Claiming a Malfunction	8.9.3
25m Events - Control of Timing	8.7.6.2 a
25m Events - Correcting a Malfunction	8.9.3 b
25m Events - Determining the Cause of a Malfunction	8.9.4.3
25m Events - Determining Allowable / Non Allowable Malfunction	8.9.4.3 C
25m Events - Early and late Shots	8.8.2.3
25m Events - Early and late Shots - Deduction of Points	8.8.2.3
25m Events - Firing before the Command “LOAD”	8.7.6.2 e
25m Events - Firing after an incorrect Range Command	8.8.3 d
25m Events - Incorrect Range Commands	8.8.3
25m Events - Incorrect Range Commands - Deduction of Points	8.8.3 C
25m Events - Interruptions of more than 15 Minutes	8.8.1 a
25m Events - Irregular Shots	8.8.2
25m Events - Load command	8.7.6.2
25m Events - Load with more than 5 Cartridges	8.7.6.2 C
25m Events - Malfunctions	8.9
25m Events - Malfunctions during the Sighting Series	8.9.1
25m Events - Malfunctions - Number of Repeating	8.9.1 C
25m Events – Non-Allowable Malfunctions	8.9.4.2
25m Events - Start and End of Timing	8.7.6.2 a
25m Events - Timing Irregularity Claims	8.8.5
25m Events - Too many Competition Shots fired	8.8.2.1
25m Events - Too many Sighting Shots fired	8.8.2.2
25m Events - Types of Malfunctions	8.9.4
25m Events - Unload Command	8.7.6.2 f
25m Events and Stages - Crossfires on sighting targets	8.8.2.4
25m Malfunction Repair- Complete the Competition - Determined by Jury	8.9.2 C
25m Pistol / 25m Centre Fire Pistol or Revolver - Late Shots Prec. Stage	8.8.2.3 b
25m Pistol / 25m Centre Fire Pistol or Revolver - Commands	8.7.6.4
25m Pistol/ 25m Centre Fire Pistol or Revolver - Interrupted Series	8.8.1.c
25m Pistol / 25m Centre Fire Pistol or Revolver - Prec. Stages - Completion after allowable malfunction	8.9.4.6
25m Pistol / 25m Centre Fire Pistol or Revolver - Precision Stage	8.7.6.4
25m Pistol/ 25m Centre Fire Pistol or Revolver - Procedure after AM	8.9.4.6

CamScanner

25m Pistol / 25m Centre Fire Pistol or Revolver - Rapid-fire Stage	8.7.6.4
25m Pistol/ 25m Centre Fire Pistol or Revolver - Scoring AM	8.9.4.6
25m Pistol/ 25m Centre Fire Pistol or Revolver - Sighting Series	8.7.6.4 a
25m Pistol / 25m Centre Fire Pistol or Revolver - Specific Rules	8.7.6.4
25m Pistol / 25m Centre Fire Pistol or Revolver - Start of a Series	8.7.6.4.j
25m Pistol/ 25m Centre Fire Pistol or Revolver - Two Shots fired Exposure	8.8.2.1.C
25m Pistol / 25m Centre Fire Pistol or Revolver Event divided into 2 Stages	8.7.6.4
25m Pistol and 25m Centre Fire Pistol or Revolver Events Table	8.11
25m Pistol Events - Complaint concerning Failure to display a Shot	8.10.3
25m Pistol Events - Failure of a single Target	8.10.2
25m Pistol Events - Failure of EST or Paper Target Systems	8.10
25m Rapid-fire Pistol - Ammunition collection for Testing	8.4.4.2
25m Rapid-fire Pistol - Announcement of Series	8.7.6.3 e
25m Rapid-fire Pistol - Commands in Qualification Event	8.7.6.3
25m Rapid-fire Pistol -Facing the Targets on seven Seconds ±0.1 Seconds	8.7.6.3 f *to* h
25m Rapid-fire Pistol - Interrupted Series	8.8.1 b
25m Rapid-fire Pistol - Pause of 1 Minute before next command “Load”	8.7.6.3 l
25m Rapid-fire Pistol - Procedure after AM	8.9.4.5
25m Rapid-fire Pistol - Ready Position	8.7.6.3 g / 8.7.2
25m Rapid-fire Pistol - Re-firing in the same Time Stage	8.7.6.3 d
25m Rapid-fire Pistol - Scoring AM	8.9.4.5
25m Rapid-fire Pistol - Shooting on Command	8.7.6.3 C
25m Rapid-fire Pistol - Sighting Series	8.7.6.3 b
25m Rapid-fire Pistol - Specific Rules	8.7.6.3
25m Rapid-fire Pistol - Start of a Series - Attention	8.7.6.3 f
25m Rapid-fire Pistol - Velocity Test	8.4.4.1
25m Rapid-fire Pistol - Velocity Test Procedure	8.4.4.2
25m Rimfire Pistol	8.4.3.1
25m Standard Pistol - Announcement of Series	8.7.6.5 b
25m Standard Pistol - Commands	8.7.6.5 d
25m Standard Pistol - Event divided into 3 Stages	8.7.6.5
25m Standard Pistol - Interrupted Series	8.8.1.b
25m Standard Pistol - Procedure after AM	8.9.4.5
25m Standard Pistol - Ready Position	8.7.6.5 e / 8.7.2
25m Standard Pistol - Scoring AM	8.9.4.5
25m Standard Pistol - Sighting Series	8.7.6.5 a
25m Standard Pistol - Specific Rules	8.7.6.5
25m Standard Pistol - Start of a Series - Attention	8.7.6.5 d

CamScanner

50m Pistol - Calibre allowed	8.4.3.4 a
50m Pistol - Hand Covers	8.4.3.4 b
Allowable Malfunctions - 25m Events	8.9.4.1
Ammunition Specifications	8.4.4
Application of Rules for all Pistol Events	8.1.1
Barrels - See the Pistol Specification Table (8.12)	8.4.1.2
Case Catchers	8.4.1.5
Centre Fire Pistol - Calibre allowed	8.4.4
Centre Line of the Bore - 25m Pistols	8.4.3.1 b
Compensators 25m - Not Allowed	8.12
Competition Rules	8.7
Complaint concerning Failure to display a Shot - 25m Pistol Events	8.10.3
Complete the Competition - Determined by the Jury - 25m Malfunction	8.9.2 C
Continue with replacement 25m Pistol after Malfunction	8.9.2
Correcting Lenses	8.4.1.3e
Correction Glasses	8.4.1.3f
Crossfires on Sighting Targets - 25m	8.8.2.4
Deduction of Points - 25m Events - Too many Shots fired	8.8.2.1
Deduction of Points - Disturbances - Claim not justified	8.8.4.2
Deduction of Points - Early and late Shots - 25m Events	8.8.2.3
Deduction of Points - Load with more than 5 Cartridges	8.7.6.2 d
Deduction of Points - Not sufficiently lowering the Pistol Arm	8.7.4 C
Deduction of Points - Range Commands Incorrect - 25m Events	8.8.3 C
Deduction of Points - Timing - 25m Events - Claim is not justified	8.8.5.1 b
Disqualification - Firing before the Command “LOAD”	8.7.6.2 e
Disqualification - Raising the Pistol Arm too soon	8.7.4 d
Disturbances - 25m Events	8.8.4
Disturbances - 25m Events Claim justified	8.8.4.1
Disturbances - 25m Events Claim not justified	8.8.4.2
Disturbances - Claim not justified - Deduction of Points	8.8.4.2 f
Early and late Shots - 25m Events	8.8.2.3
Electronic Triggers	8.4.1.4
Equipment and Ammunition	8.4
Extra Time to repair a 25m Pistol, granted by the Jury - Malfunction	8.9.2 b
Failure of a single Target or Target Group - 25m Pistol Events	8.10.2
Failure of all Targets on a Range or Range Section	8.10.1
Failure of Electronic Scoring Target Systems/ Paper Targets Systems	8.10
Firing - After an incorrect Range Command - 25m Events	8.8.3 d

CamScanner

Firing Position	8.7.1
Forms used for Malfunctions - See Technical Rules before the Index	6.18 e / 6.18 f
General - Malfunction of a Pistol - Repair/ Information	8.9.2
General Pistol Rules	8.1
General Standards for all Pistols	8.4.1
Grips - See the Pistol Specification Table and Table of Drawings	8.4.1.1
Holding of Pistol with one hand	8.7.1
Incorrect Range Commands - 25m Events	8.8.3
Interrupted Series - 25m Pistol/ 25m Centre Fire Pistol	8.8.1 C
Interrupted Series - 25m Rapid-fire Pistol / 25m Standard Pistol	8.8.1 b
Interrupted Series - Malfunction in 25m Events	8.9.1 C
Interruptions - 25m Events and Stages	8.8.1
Irregular Shots - 25m Events	8.8.2
Knowledge of the Rules	8.1.2
Late Shots Precision Stage - 25m Pistol / 25m Centre Fire Pistol	8.8.2.3 b
Left-handed Athlete - Right-handed Athlete	8.1.3
Magnum Ammunition - Not Allowed	8.4.4
Malfunction - Determining the Cause	8.9.4.3
Malfunction - Extra Time to repair a 25m Pistol, granted by the Jury	8.9.2 b
Malfunction - Maximum Time to repair or replace a 25m Pistol	8.9.2 a
Malfunction - Sighting Series 25m Events	8.9.1
Malfunction of a Pistol - Allowance to repair the Pistol	8.9.2
Malfunction of a Pistol - Inform the Jury of Repair	8.9.2
Malfunctions 25m Events	8.9
Malfunctions Repairs	8.9.2
Maximum Time to repair or replace a 25m Pistol - Malfunction	8.9.2 a
Measurement of Barrels - 25m Pistols	8.4.1.2
Measurement of Barrels - 25m Pistols Specification Table	8.12
Measuring Box	8.12 d
Men's Events/ Women's Events	8.1.4
Movement or Oscillation Reduction Systems	8.4.1.6
Muzzle Brakes - Not Allowed 25m	8.12
Non-Allowable Malfunctions - 25m Events	8.9.4.2
Number of Allowable Malfunctions 25m Events	8.9.1
Pistol Events - See the Pistol Events Qualification Table	8.11
Pistol Support Stands	8.6.3
Pistol Transport Boxes	8.6.2
Preparation and Sighting Time 10m and 50m Pistol Events	8.11

CamScanner

Preparation Time - Handling of Pistols, Sighting Targets visible	8.7.6.1 d
Preparation Time - Pre-competition Checks	8.7.6.1 C
Preparation Time - Time in Minutes 10m and 50m Events	8.11
Preparation Time 25m Events	8.7.6.1
Random Trigger Weight Checks	8.4.2.3
Range and Target Standards	8.3
Ready Position	8.7.2
Ready Position - Not sufficiently lowering the Pistol Arm	8.7.3 b
Ready Position - Raising the Pistol Arm too soon	8.7.3 a
Ready Position 25m Events	8.7.2
Ready Position 25m Events - Drawing	8.7.2
Report of the Athlete - Preparation Time	8.7.6.1 a
Right-handed Athlete - Left-handed Athlete	8.1.3
Safety	8.2
Shoe Sole Flexibility Measuring Device	8.5.5
Shoe Sole Flexibility Standard	8.5.6
Shoes	8.5
Shooting Accessories	8.6
Shooting Event Procedures and Competition Rules	8.7
Sighting Series 25m Events - Malfunction	8.9.1
Sights - See the Pistol Specification Table (8.12)	8.4.1.3
Specific Standards for 25m Pistols	8.4.3
Spotting Telescopes	8.6.1
Table - Pistol Drawings and Measurements	8.13
Table - Pistol Event Table	8.11
Table - Pistol Specification Table	8.12
Telescopes for Spotting	8.6.1
Timing - 25m Events - Irregularities	8.8.5.1
Timing - 25m Events - Claim is justified	8.8.5.1 a
Timing - 25m Events - Claim is not justified	8.8.5.1 b
Too many Shots fired - 25m Events	8.8.2.1
Too many Sighting Shots fired - 25m Events	8.8.2.2
Trigger Pull - Measurement	8.4.2
Trigger Pull - Measurement - Maximum 3 Attempts	8.4.2/ 8.4.2.3
Trigger Pull - Measurement - Random Checks	8.4.2.3
Trigger Pull - Test Weight on the Range - Available to the Athletes	8.4.2.2
Two Shots fired in an Exposure - 25m Pistol/25m Centre Fire Pistol	8.8.2.1 C
Types of Malfunctions	8.9.4

CamScanner

Types of Malfunctions - 25m Events	8.9.4
Velocity Test - 25m Rapid-fire Pistol	8.4.4.1
Velocity Test - 25m Rapid-fire Pistol - Testing Procedure per Relay	8.4.4.2
Women’s Events/ Men’s Events	8.1.4
Wrist - Visibly free of Support	8.7.1

CamScanner

CamScanner

eurotarget

Shooting sport system and targets

OFFICIALLY APPROVED BY **ISSF**

info@eurotargetg CS com

MATTARELLI

CamScanner

9
SHOTGUN RULES

FOR

Trap

Skeet

Skeet Mixed Team

Trap Mixed Team

Double Trap

Trap Team

Skeet Team

CamScanner

9.1 **GENERAL** 393

9.2 **SAFETY** 393

9.3 **RANGE AND TARGET STANDARDS** 394

9.4 **EQUIPMENT AND AMMUNITION** 395

9.5 **COMPETITION OFFICIALS** 398

9.6 **SHOOTING EVENTS AND COMPETITION PROCEDURES** 404

9.7 **TARGETS – REGULAR, IRREGULAR, BROKEN, HIT, LOST AND NO TARGETS** 405

9.8 **COMPETITION RULES FOR TRAP** 407

9.9 **COMPETITION RULES FOR DOUBLE TRAP** 411

9.10 **COMPETITION RULES FOR SKEET** 416

9.11 **COMPETITION ADMINISTRATION** 424

9.12 **MALFUNCTIONS** 426

9.13 **COMPETITION CLOTHING AND EQUIPMENT** 428

9.14 **RESULTS, TIMING AND SCORING (RTS) PROCEDURES** 429

9.15 **TIES AND SHOOT-OFFS** 432

9.16 **RULE VIOLATIONS** 435

9.17 **PROTESTS AND APPEALS** 438

9.18 **TEAM EVENTS** 440

9.19 **DRAWINGS AND TABLES** 440

9.20 **INDEX** 447

NOTE:

Where figures and tables contain specific information, these have the same authority as the numbered rules.

CamScanner

9.1 GENERAL

9.1.1 These Rules are part of the ISSF Technical Rules and apply to all Shotgun events.

9.1.2 All athletes, coaches, team leaders and officials must be familiar with the ISSF Rules and must ensure that these Rules are enforced. It is the responsibility of each athlete to comply with the Rules.

9.1.3 When a Rule refers to right-handed athletes, the reverse of that Rule refers to left-handed athletes.

9.1.4 Unless a Rule applies specifically to a men's or a women's event, it must apply uniformly to both men's and women's events.

9.1.5 Where figures and tables in these rules contain specific information, the specific information in these figures and tables has the same authority as the numbered rules.

9.2 SAFETY

9.2.1 Safety is of Paramount importance

The safety of athletes, range personnel and spectators require continued and careful attention to gun handling and caution in moving about the range. It is strongly recommended that all personnel operating forward of the firing line should wear high visibility vests or jackets. Self-discipline is necessary on the part of all.

9.2.2 Carrying Shotguns

To ensure safety, all shotguns, even when empty, must always be handled with maximum care (penalty - possible **DISQUALIFICATION**).

a) Conventional double-barrelled shotguns must be carried empty with the breech visibly open;

b) Shotguns not in use must be placed in a gun rack, locked gun case, armoury or other secure place.

c) All shotguns must be kept unloaded except on the shooting station and only then after the command or signal **"START"** has been given.

d) Cartridges must not be loaded in the shotgun until the athlete is standing on the shooting station, facing the machines with the shotgun pointed towards the target flight area and after the Referee has given permission.

e) When shooting is interrupted, the shotgun must be opened and any cartridges or empty cartridge cases must be removed.

f) No athlete may turn from the shooting station before his shotgun is open and empty.

g) After the last shot and before leaving the range or placing the shotgun on a rack, armoury etc., the athlete must ascertain that there are no cartridges or empty cartridge cases in the chamber and/or magazine. The handling of closed shotguns is prohibited when operating personnel are forward of the firing line.

9.2.3 Aiming

a) Aiming exercises are permitted only on designated shooting stations with the permission of the Referee, or in designated dry firing areas.

CamScanner

b) Aiming or shooting at another athlete's targets or deliberately aiming or shooting at live birds or other animals is prohibited.

c) Aiming in any area other than within the designated dry firing areas and direction is prohibited.

9.2.4 **Shooting and Test Firin**g

a) Shots may be fired only when it is the athlete's turn and the target has been thrown.

b) With the permission of the Referee, test firing of shotguns (a maximum of two (2) shots) is permitted for each athlete on each day of competition immediately prior to the start of their first round of the day.

c) Test firing of shotguns is also permitted for each athlete prior to the start of the Finals or any shoot-offs after qualification.

d) Test shots must not be fired into the ground within the shooting areas.

e) Test firing of a shotgun after a repair is permitted, but it must be arranged with the Chief Referee.

9.2.5 **"STOP" Command**

a) When the command or the signal **"STOP"** is given, shooting must stop immediately and all athletes must unload their shotguns and make them safe;

b) No shotgun may then be closed until the command to continue **("START")** has been given;

c) Shooting may only be resumed at the appropriate command **("START")** or signal; and

d) Any athlete who handles a closed shotgun after the **"STOP"** command has been given, without the permission of the Referee, may be disqualified.

9.2.6 **Commands**

a) All range commands must be given in the English language;

b) The Referees or other appropriate range officials are responsible for giving the commands **"START," "STOP"** and other necessary commands; and

c) The Referees must then ascertain that the commands are obeyed and that all shotguns are handled safely.

9.2.7 **Eye And Ear Protection**

a) All athletes and other persons in the vicinity of the firing line must wear ear plugs, ear muffs, or similar adequate ear protection;

b) Hearing protection incorporating any type of sound-enhancing or receiving devices may not be worn by athletes or coaches on the FOP. Hearing impaired athletes may wear sound-enhancing devices with the approval of the Jury (see also G.T.R. 6.2.5); and

c) All athletes, Referees and officials should wear shatterproof shooting glasses or similar eye protection.

9.3 RANGE AND TARGET STANDARDS

a) Clay target standards are found in G.T.R. 6.3.6

CamScanner

b) Range standards for Shotgun ranges are found in G.T.R. 6.4.17/18/19/and 20

c) No athlete, coach or team official may interfere in any way with the range equipment (traps, microphones, control units, etc.) once set by the Referee or Jury. For a first violation, a **Warning (Yellow Card)** will be given to the athlete; a second violation will result in a **one (1) point Deduction (Green Card)** from the last hit target in the last completed round. Any subsequent occurrence will result in **Disqualification (Red Card).** The deliberate switching off of the control unit will result in an **immediate disqualification**. If a coach or team official violates this rule, the warning or penalty must be given to all athletes involved with that coach.

9.4 EQUIPMENT AND AMMUNITION

9.4.1 Equipment Restrictions

a) Athletes must use only equipment and clothing that comply with the ISSF Rules.

b) Any shotgun, device, equipment, accessory or other item that may give an athlete an unfair advantage over others and that is not specifically mentioned in these Rules, or that is contrary to the spirit of these Rules, including accessories or devices used to facilitate the counting of targets, is prohibited.

c) The use of cartridges with coloured wads is prohibited (see also (9.4.3.1 (f)).

d) For a violation of these Rules, the athlete must receive a **Warning (Yellow Card)** for the first occurrence. For a repeat violation, the athlete must receive a **Deduction (Green Card)** of five (5) targets from the last five (5) hit targets in the last completed round.

9.4.1.1 Equipment Control

a) Athletes are responsible for ensuring that all items of equipment and clothing used by them in ISSF Competitions comply with the ISSF Rules.

b) The Shotgun Jury is responsible for checking the athletes' equipment to ensure compliance. The Jury must provide an equipment control consultation service that is available to all athletes starting on the first Pre-Event Training Day so that athletes, if they wish, may have their equipment checked prior to the competition.

c) To ensure compliance with the ISSF Rules, the Jury will conduct random checks during Competition and any athlete found to be in violation of the rules will be penalized, as per Rules.

d) Athletes found to be in violation of the rules for shotguns or Skeet marker tapes must be disqualified.

9.4.1.2 Equipment on the Field of Play / Shooting Area

Any equipment or accessories on the field of play/shooting area shall be deemed as available for use by the athlete concerned and will be subject to inspection/ check by the Jury. Penalties will be applied.

9.4.2 Shotguns

9.4.2.1 Types of Shotguns

a) All types of smoothbore shotguns, **but excluding semi-automatics and pump action shotguns,** may be used, provided their calibre does not exceed

CamScanner

12 gauge. Shotguns smaller than 12 gauge may be used.

b) Shotguns must not have a camouflage finish.

9.4.2.2 **Release Triggers**

Shotguns with any type of “release” trigger mechanisms are prohibited.

9.4.2.3 **Slings**

Slings or straps on shotguns are prohibited.

9.4.2.4 **Magazines**

Shotguns with magazines must have the magazine blocked so that it is not possible to put more than one (1) cartridge in the magazine.

9.4.2.5 **Changing Shotguns**

The changing of properly functioning guns or parts of guns, including interchangeable chokes, is not permitted in the same round.

9.4.2.6 **Compensators**

The addition of compensators and similar devices (designed to reduce muzzle rise) fitted to gun barrels is prohibited, except that ported interchangeable chokes are permitted (see Rule 9.4.2.7 & 8)

9.4.2.7 **Ported Barrels and Ported Interchangeable Chokes (with or without porting)**

Ported barrels are permitted, provided they do not extend back further than 20cm as measured from the end of the muzzle, or as measured from the muzzle end of any interchangeable fitted choke; and

9.4.2.8 Interchangeable chokes (with or without porting) fitted to the end of the muzzle are permitted. In the case of ported interchangeable chokes, their porting (plus any barrel porting) shall not extend back further than 20cm as measured from the muzzle end of the interchangeable fitted choke.

9.4.2.9 **Optical Sigh**ts

All devices or scopes fitted to the gun that have magnifying, light emitting, forward lead displacement, spotting properties, video cameras or apparatus that gives visual enhancement of the target, are prohibited.

9.4.2.10 **Buttstock Depth and Barrel Porting**

9.4.2.11 The depth of the buttstock (either adjustable or “Monte Carlo” type) measured from the highest point of the cheek rest to the lowest point of the butt plate toe must not exceed 170mm (17cm). Any butt plate toe vertical extension which is not an integral part of the buttstock and simply intended to increase its depth, is not permitted.

CamScanner

9.4.2.12 The barrel porting shall not extend more than 200mm (20cm) from the end of the muzzle or end of the interchangeable fitted choke (see also: 9.4.2.7 & 8).

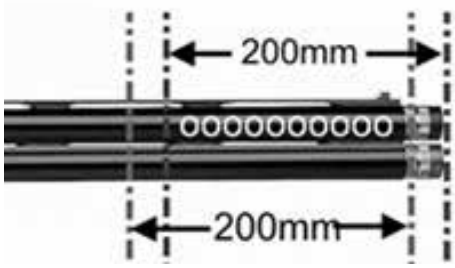

9.4.3 **Ammunition**

9.4.3.1 **Cartridge Specifications**

Cartridges permitted in the ISSF competitions must meet the following specifications:

a) Shot charge must not exceed 24.0g (+0.5g tolerance). To determine if an athlete is using cartridges that comply with this rule, the cartridge inspection procedure must determine that the average weight of the selected cartridges does not exceed the maximum shot charge plus tolerance (24.5g);

b) Pellets must be spherical in shape;

c) Pellets must be made of lead, lead alloy or of any other ISSF approved material;

d) Pellets must not exceed 2.6mm in diameter;

e) Pellets may be plated;

f) Only transparent or translucent wads with no colour may be used. Coloured wads are prohibited;

g) Black powder, tracer, incendiary, or other special types of cartridges are prohibited; and

h) No internal changes may be made which will give an extra or special dispersion effect, such as the inverse loading of components, crossing devices, etc.

9.4.3.2 **Cartridge Inspection**

a) The Equipment Control or Shotgun Jury must implement a cartridge inspection procedure that is approved by the ISSF Shotgun Committee. Specific details for conducting the cartridge inspection procedure are found in the Shotgun Equipment Control Guide that is available from the ISSF Headquarters.

b) During a competition, a Referee (under the instructions of the Jury) or a Jury member, may take out of the normal cartridge control procedure, an athletes' cartridge/s for inspection at any time when the athlete is in the shooting area.

c) When cartridges are sold to participating teams at an ISSF Competition site, the Equipment Control or Shotgun Jury must test selected samples of these cartridges before the Pre-Event Training (PET) for the first event and post the results of these tests so that this information is available to coaches and athletes.

CamScanner

d) If an athlete uses ammunition that is not in accordance with Rule 9.4.3.1 a) (maximum shot charge), he must be **Disqualified (Red Card)**; and

e) If an athlete uses ammunition that is not in accordance with Rule 9.4.3.1, he must receive a **Warning (Yellow Card)** or be penalized according to Rules 9.4.1 d) and 9.16.4.1.e).

9.5 COMPETITION OFFICIALS

9.5.1 General

All persons who are designated to serve as officials in ISSF competitions must possess valid qualifications appropriate to the level of the competition. When on duty, all Jury Members are required to wear the official ISSF Jury (red) Vest that can be purchased from the ISSF Headquarters. Also, when on duty, all Referees are required to wear the official ISSF Shotgun Referee (blue) Vest. that can be purchased from ISSF Headquarters.

9.5.2 Jury

9.5.2.1 Duties Before the Competition Starts

Before the competition starts, the Jury must:

a) Check the ranges to ensure that they comply with these Rules;

b) Ensure that the targets are correctly set according to these Rules;

c) Review the competition organization to confirm that it is properly prepared to conduct the competition;

d) Establish an equipment control consultation service where athletes may have their guns, clothing and accessories checked; and

e) Cooperate with the RTS office in the verification, preparation and distribution of the start lists, both for the Pre-Event Training, the Qualification stage and the Finals, as well as any possible shoot-offs before and during the Finals.

9.5.2.2 Duties During the Competition

During the competition, the Jury must:

a) Supervise the competition;

b) Advise and assist the Organizing Committee;

c) Ensure the correct application of the Rules;

d) Check the athletes' guns, ammunition and equipment;

e) Check that the targets are set correctly after a trap machine breakdown;

f) Make random checks during Qualification Rounds to ensure compliance with the Preparation Time Limits;

g) Make random checks during Competition to ensure compliance with the rules concerning guns, ammunition, shooting vests and other clothing;

h) Deal with protests that are properly submitted;

i) Enforce the ISSF Eligibility, ISSF Commercial Rights and ISSF Sponsorship/ Advertising Rules;

j) Approve the official preliminary and final ranking lists that are produced by

CamScanner

the RTS office and confirm/verify the athletes eligibility to participate in the shoot-offs and the finals.

k) Make decisions regarding penalties;

l) Implement sanctions where appropriate; and

m) Make decisions in any cases that are not provided for in the Rules, or are against the spirit of these rules.

9.5.3 **Chief Range Officer**

9.5.3.1 **General**

The Chief Range Officer is appointed by the Organizing Committee. He should have a wide experience in shotgun shooting and a thorough knowledge of shotguns, clay targets, clay target throwing machines, acoustic release systems, scoreboards and range equipment. He should hold a valid/current ISSF Shotgun Referee or Judges' licence.

9.5.3.2 **The Chief Range Officer is responsible for:**

a) Fulfilling all technical and logistic issues with regard to preparation and proper conduct of a competition; and

b) Performing all duties listed below in close cooperation with the Technical Delegate, Jury, Organizing Committee, Chief Referee, the RTS Office and other staff members.

9.5.3.3 **The duties of the Chief Range Officer are:**

a) To give instruction and to supervise preparation of the shooting ranges according to technical and safety requirements as described in the ISSF Technical Rules, relevant to the Shotgun events;

b) To give instructions and supervise preparation of auxiliary facilities such as shotgun and ammunition storage, technical service, means of communication between the shooting ranges, technical personnel etc.;

c) To give direction and supervise the preparation of clay targets for training and competition;

d) To provide special ("Flash") targets filled with coloured powder for the Finals and any shoot-offs in the Finals;

e) To ensure that the traps are adjusted according to the settings of the day;

f) To ensure that all necessary range systems are functioning properly;

g) To ensure that all range equipment is on each range and properly placed (large scoreboard, tables, range clocks, seats and umbrellas for Assistant Referees, facilities for the athletes, scorekeepers etc.);

h) To assist the Organizing Committee to prepare official and unofficial training programmes and give advice in the preparation of the competition schedule.

i) To make decisions, with the approval of the Jury, regarding change of competition times and range allocations and interruption of the shooting on the ranges, for safety or other reasons; and

j) Instruct operating staff regarding the traps, release systems etc. with particular regard to safety.

CamScanner

9.5.4 **Chief Referee**

9.5.4.1 **General**

The Chief Referee must be appointed by the Organizing Committee in conjunction with the ISSF. He must possess an ISSF Shotgun Referee's licence and must have a wide experience in Shotgun shooting and in the organization of ISSF competitions and a thorough knowledge of the ISSF Rules applying to the competition.

9.5.4.2 **The duties of the Chief Referee, in general, are:**

a) To assist the Organizing Committee and the ISSF, in the selection and appointment of the Referees;

b) To supervise the Referees and the Assistant Referees;

c) To give instruction and information to the Referees and the Assistant Referees;

d) Supervise the work of the Referees and evaluate their performance.

e) To prepare the schedules and assignments for the Referees, inclusive of Shoot-Offs and Finals;

f) To make decisions in cooperation with the Jury, such as when and on which ranges an athlete who had to leave his squad to repair a gun malfunction or was declared **"ABSENT"** may be permitted to complete his round; and

g) To keep the Chief Range Officer informed of any difficulties, failures, machine breakdowns, delays etc. on the Ranges;

h) To ensure that all Referees are present on time at the Ranges to conduct the competition.

i) To monitor that the competition is conducted according to the timings of the competition schedule and take necessary action in case of delays.

j) To cooperate with the Technical Delegate and the Jury, in the proper conduct of the Competition and follow their guidelines and directives.

9.5.5 **Referees**

9.5.5.1 Referees must be appointed by the Organizing Committee in co-operation with the Chief Referee and the ISSF, and must:

a) Possess an ISSF Shotgun Referee's license and a current Eyesight Certificate;

b) Have wide experience in Shotgun shooting; and

c) Have a thorough knowledge of the Shotgun and ISSF Rules applying to the competition.

9.5.5.2 **The main functions of the Referee are:**

a) Before the start of any round to ensure that the ranges are safe;

b) To check that the correct squad of athletes is present on the range before the start of a round and ensure that the Side Referees are ready in their allocated positions;

c) To ensure that the correct procedure is used to declare an athlete **"ABSENT"**

CamScanner

(See: Rule 9.11.2.6 & 7 for **“ABSENT”** athlete);

d) To make immediate decisions regarding **“HIT TARGETS”** (in all doubtful cases or a disagreement made by the athlete, the Referee must consult with the Assistant Referees before making a final decision);

e) To make immediate decisions regarding **“LOST TARGETS”** (the Referee must give a clear and distinct signal for all targets declared “LOST”);

f) To make immediate decisions regarding **“NO TARGETS AND IRREGULAR TARGETS”** (if possible, the Referee must call **“NO TARGET”** or give some signal before the athlete fires);

Note: Irregular targets require an immediate decision by the Referee.

g) To issue **Warnings (Yellow Card)** or automatic **Deductions (Green Card)** for technical violations where appropriate, as per Rules (See: section 9.16);

h) To ensure that the result of each shot is correctly recorded (on the scorecards and the scoreboards);

i) At the end of each round, to sign the official scorecard and ensure that the final results of the round are correctly posted and any initial warning/s on technical violations recorded. Initial warnings on technical or rule violations must also be recorded on an incident report which must be handed over to the RTS office.

j) Any disagreements raised by an athlete regarding his final result recorded on a scorecard, must whenever possible be verified, before the scorecard is handed over to the RTS office.

k) To ensure that the athletes are not disturbed;

l) To monitor illegal coaching (non-verbal coaching is allowed according to G.T.R. 6.12.5.1);

m) To rule on any protests received from athletes;

n) To rule on disabled guns;

o) To rule on malfunctions;

p) To ensure the correct conduct of the round; and

q) To ensure the application of the safety rules.

CamScanner

9.5.5.3 **Hand Signals to be used by Referees during Competition**

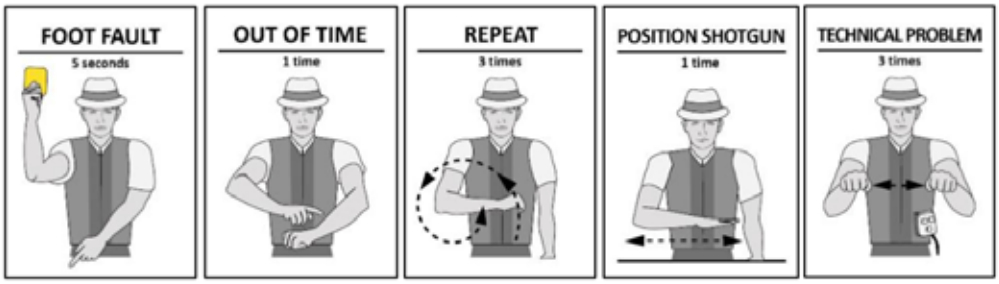

9.5.5.4 **Additional Hand Signals to be used by Referees during Finals**

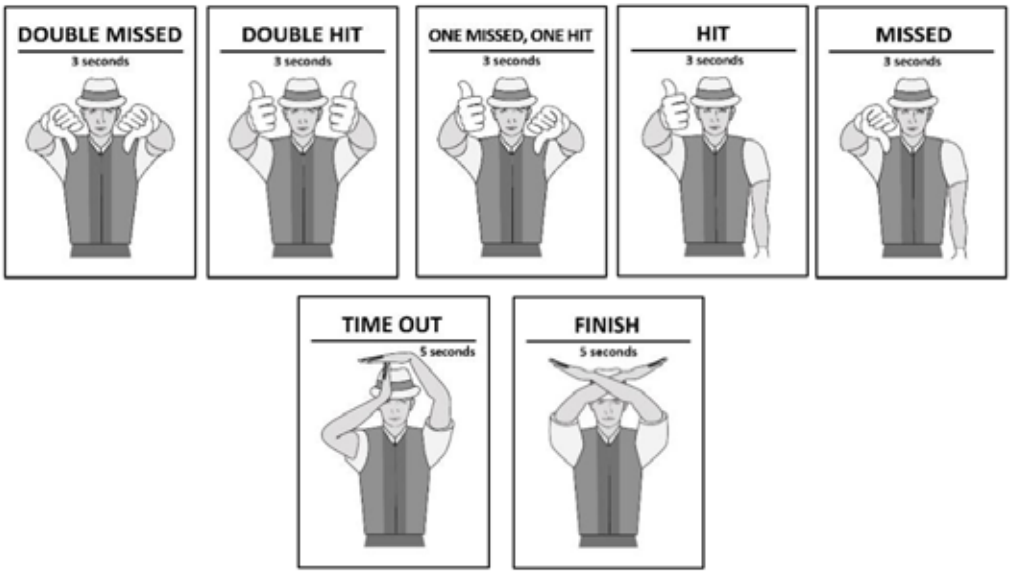

9.5.5.5 **Warnings Issued by the Referee**

a) The Referee must give **Warnings** for rule violations **(Yellow Card**) and must note such warnings on the official range scorecard (See: section 9.16); but

b) The Referee may not assess penalties or disqualifications that fall under the responsibility of the Jury.

9.5.6 **Assistant Referees**

9.5.6.1 **The Referee must be assisted by two (2) or three (3) Assistant Referees:**

a) The Organizing Committee will provide qualified Assistant Referees;

b) The Referee may accept experienced substitutes; and

c) A Coach/Team leader must not be a substitute if there is an athlete of the same nation in the squad.

9.5.6.2 **The main duties of an Assistant Referee are:**

a) To watch each target thrown;

b) To carefully observe whether a target is broken before the shot is fired;

c) To give, immediately after a shot, a signal to the Referee if he/she observes that in his/her opinion the target(s) is/are **"LOST."**

CamScanner

d) If required, to mark the result of the Referee's decision regarding each shot on the official scorecard;

e) If asked, to advise the Referee on any other matters relating to the targets;

f) To be positioned in such a way that they can observe the whole unobstructed shooting area;

g) To indicate to the Referee in a Skeet event if the target is not hit within the boundaries; and

h) In a Skeet event at the time of shooting on station 8, the two Side Referees under the directions of the Referee, must leave their original positions and be placed in the middle of the layout (in line of station 4 and 8), behind the Referee, to be able, if necessary, to advise him, whether the target is hit or not within the boundaries.

i) To advise the Jury in case of a protest.

9.5.6.3 **Advising the Referee**

The Referee must always make the final decision. If any Assistant Referee is in disagreement, it is his duty to advise the Referee by lifting an arm or otherwise attracting his attention. The Referee must then arrive at a final decision.

CamScanner

9.6 SHOOTING EVENTS AND COMPETITION PROCEDURES

9.6.1 Shotgun Events (See: GR section rule 3.3.1):

9.6.1.1 Olympic Events:

Skeet individual Men

Skeet individual Women

Trap individual Men

Trap individual Women

Skeet Mixed Team in the Open category (Men-Women)

9.6.1.2 Additional Events

Skeet individual Men Junior

Skeet individual Women Junior

Trap individual Men Junior

Trap individual Women Junior

Trap Mixed Team in both senior and junior categories

Skeet Mixed Team in junior categories

Trap Team (Men, Men Junior, Women, Women Junior)

Skeet Team (Men, Men Junior, Women, Women Junior)

Double Trap individual Men

Double Trap individual Women

Double Trap individual Men Junior

Double Trap individual Women Junior

Open individual events All gender and age

9.6.1.3 The programmes for each event are:

Event	Categories	Qualification Stage Number of Targets	Final Stage
Skeet individual	All (M, MJ, W, WJ)	125 in 5 rounds of 25 each, shot in 2 or 3 days	Eliminations with 50 targets for Bronze medal. 60 targets to decide Gold/ Silver medals (See: Rule 6.19.4.2)
Trap individual	All (M, MJ, W, WJ)	125 in 5 rounds of 25 each, shot in 2 or 3 days	Eliminations with 40 targets for Bronze medal. 50 targets to decide Gold/ Silver medals (See: Rule 6.19.4.1)
Skeet Mixed Team	All (M+W MJ+ WJ)	75 in 3 rounds of 25 each.	Final Stage 1; (Bronze Medal) Final Stage 2; (Gold/Silver medals) (See: Rule 6.20.1)
Trap Mixed Team	All (M+W MJ+ WJ)	75 in 3 rounds of 25 each.	No Final

CamScanner

Skeet Team	All (M, MJ, W, WJ)	75 in 3 rounds of 25 each.	No Final
Trap Team	All (M, MJ, W, WJ)	75 in 3 rounds of 25 each.	No Final
Double Trap individual	All (M, MJ, W, WJ)	120 in 4 rounds of 30 each, shot in 1 or 2 days	No Final

Note: Description of the formats of the Finals in individual events can be found in section 6.19 as well as the detailed formats of the Mixed Team Finals in section 6.20. Team events can be found in section 9.18 of the Rules.

9.6.2 **Training**

9.6.2.1 **Pre-Event Training**

a) Must be provided for each event on the day(s) before the start of the official competition on the same ranges and the same make and colour of targets as those that will be used in the official competition;

b) The Jury must check that the targets are set correctly for all Pre-Event trainings;

c) All training times must be allocated fairly between those athletes present so that no advantage is given; and

d) For Skeet, two extra Doubles shall be provided (one reverse Double on Station 3 and one reverse Double on station 5).

9.6.2.2 **Unofficial Training**

All range availability for unofficial training is the responsibility of the Organizing Committee, and must:

a) Ensure that the unofficial training must not interfere, in any way, with any scheduled competition events;

b) Be allocated fairly between those nations present so that no advantage is given; and

c) Ensure that all team leaders present are informed of any unofficial training schedules.

9.7 TARGETS – REGULAR, IRREGULAR, BROKEN, HIT, LOST AND NO TARGETS

9.7.1 **Regular Target**

a) A regular target is one (1) whole target called by the athlete and released according to the Rules; and

b) A regular Double is two (2) whole targets called by the athlete and released simultaneously according to the Rules.

9.7.2 **Irregular Target**

An irregular target is a target that is not thrown according to the Rules and flies along a path other than that specified in the Rules in angle, elevation or distance.

An irregular Double occurs when;

CamScanner

a) One (1) or both of the targets are irregular;

b) The targets are not thrown simultaneously;

c) Only one (1) target emerges; or

d) Either target emerges “broken.”

9.7.3 **Broken Target**

a) A broken target is any target that is not whole in accordance with the General Specifications for Clay Targets (G.T.R. 6.3.6.1); and

b) A broken target is a **“NO TARGET”** target and must always be repeated.

9.7.4 **“HIT” Target**

a) A target is declared as **“HIT”** when a regular target is thrown and hit according to the event Rules and at least one (1) visible piece is broken from it;

b) A target that is only “dusted,” but from which no visible piece is seen, is not a **“HIT;”**

c) Where flash (powder filled) targets are used, a target must also be declared as **“HIT”** when there is visible emergence of powder **after a shot is fired; and**

d) All decisions regarding **“HIT,” “LOST,” “IRREGULAR”** or **“NO TARGET”** targets rest finally with the Referee.

e) It is prohibited to pick up a clay target from the range to determine whether or not it was a **“HIT.”**

9.7.5 **“LOST” Target**

A target, must be declared “**LOST**” when:

a) It is not hit during its flight within the shooting boundaries;

b) It is only dusted and no visible piece is broken from it;

c) The athlete does not fire at a regular target for which he has called and there is no mechanical or other external reason that has prevented the athlete from firing;

d) The athlete is not able to fire his shotgun for any reason attributable to the fault of the athlete;

e) The athlete is not able to fire because he has not released the “safety,” or the “safety” has slipped to “safe”;

f) The athlete has forgotten to load;

g) In the case of a semi-automatic, the athlete has failed to release the stop on the magazine;

h) If after a malfunction the athlete has opened the shotgun or has touched the safety before the Referee has examined the shotgun; or

i) It is the third or subsequent malfunction in the same round.

9.7.6 **“NO TARGET”**

a) A **“NO TARGET”** is irrelevant to the competition and must always be repeated;

b) The Referee must, if possible, call **“NO TARGET”** before the athlete fires, but if he calls **“NO TARGET”** after the athlete fires, a **“NO TARGET”** must be

CamScanner

declared regardless of whether the target/s was/were hit or not; and

c) After a **"NO TARGET"** is declared the athlete may open the shotgun and reposition him/her self.

9.8 COMPETITION RULES FOR TRAP

9.8.1 Conduct of a Round of Trap

Each squad member, with sufficient ammunition and all equipment necessary to complete the round, must occupy a shooting station in the order shown on the scorecard. The sixth athlete must stand in the marked area (Station 6) behind Station 1 ready to move to Station 1 as soon as the first athlete has shot at a regular target and the result is known. The Referee must take charge and when all preliminary procedures are completed (names, numbers, Assistants Referees, viewing of targets, test firing etc.) give the command "**START**."

9.8.1.1 Method

a) When the first athlete is ready to fire, he must raise the shotgun to the shoulder and call loudly and crisply for the target, after which the target must be thrown at once;

b) When the result of the shot(s) is known the second athlete must do likewise, followed by the third athlete and so on;

c) When the athlete has called for the target, it must be released immediately, allowing only for human reaction time to press a button if the release is manual;

d) Two (2) shots may be fired at each target except that in Finals and any shoot- offs before or during Finals only one (1) shot may be fired. If an athlete fires two (2) shots, the target will be declared **"LOST"** whether it was hit or not by either of the shots;

e) After athlete No.1 has fired at a regular target, he must prepare to move to Station 2 as soon as the athlete on Station 2 has fired at a regular target; the other athletes in the squad must, on their stations, do likewise in rotation from left to right;

f) This whole sequence must continue until all athletes have each shot at 25 targets **(2 left, 2 right and 1 centre from each of the five stations);**

g) Once the round has started an athlete may close the shotgun only after the previous athlete has completed his turn;

h) An athlete having shot must not leave the station before the athlete on the right has fired at a regular target and the result is registered, except when the athlete has completed shooting on Station 5; in this case he must turn clockwise and proceed immediately to Station 6, with unloaded shotgun being careful not to disturb the athletes who are on the line as he passes by;

i) All shotguns must be carried **OPEN** and **UNLOADED** when moving between any stations.

j) Any athlete who loads his/her shotgun on a fired station before leaving it, or carries his/her shotgun loaded between any stations must be given an initial **Warning (Yellow Card)**; any further occurrences until the end of the Qualification process will result in **Disqualification (Red Card**); and

CamScanner

k) No athlete having shot on one (1) station may proceed towards the next station in such a way as to interfere with another athlete or match officials.

9.8.1.2 **Preparation Time Limit**

a) An athlete must take his/her position, close the shotgun and call for the target within twelve (12) seconds after the previous athlete has fired at a regular target and has opened the shotgun and the result is registered, or after the Referee has given the command **"START;"**

b) In case of non-compliance with this time limit, the penalties provided in the rules will be applied;

c) Where squads consist of five (5) or less athletes, preparation time must be extended to give the athlete leaving Station 5 sufficient additional time to arrive at Station 1; and

d) During Qualification Rounds, preparation time limits must be controlled by the Referee. During shoot-offs before Finals and during Finals, preparation time limits must be monitored by an electronic timing device which must be managed by a Referee selected from among the appointed Competition Referees.

9.8.1.3 **Interruptions**

a) If a round of shooting is interrupted for more than five (5) minutes because of a technical malfunction that is not the fault of an athlete, the squad must be allowed to view one (1) regular target from each machine in the group on which the interruption occurred before the competition resumes.

b) If a technical malfunction or any other unforeseen situation (example: the control unit is accidentally set at the start of a round to the wrong number of participating athletes) requires a restart of the control unit, scoring must continue from the point where the malfunction or restart commences and no protest regarding the uneven distribution of targets will be considered.

9.8.2 **Target Distances, Angles and Elevations**

9.8.2.1 **Trap Setting Table**

Each trap machine must be set before the start of the competition to one (1) of the Trap Setting Tables 1 - 9 of Rule 9.19.3 drawn by lot, under the supervision of the Jury.

9.8.2.2 **Trap Competition arrangements and settings**

In a competition, depending upon the number of ranges in use, the squads must be scheduled before the start of the competition under the supervision of the Jury, in such a way that, whenever possible, each squad should shoot:

a) The same number of times on each range in use;

b) The same number of times on a particular setting;

c) Whenever possible the settings used in Unofficial, Official or Pre-Event Training must be different from those used during the competition;

d) If the Organizing Committee together with the Jury decide that the Trap competition for any group of athletes (e.g.: men, women or juniors) is to be conducted on only one (1) separate range, the settings must be changed after all athletes in this group have completed fifty (50) targets (except in special ISSF competitions, with very small number of participating athletes);

CamScanner

9.8.2.3 **Target Limits**

Targets must be set according to the selected schemes in **Tables** 1 - 9 (Rule 9.19.3) and within the following limits:

a) Height at 10m -- 1.5m to 3.0m, as per Trap setting tables, 1-9 with a tolerance of +/- 0.15m;

b) Angle -- as per Trap setting tables 1-9, with a tolerance of 5°; and

c) Distance -- 76.0m +/- 1.0m (as measured from the front edge of the pit roof).

9.8.2.4 **Trap Setting Procedure**

Each machine must be set to throw the target as follows:

a) Adjust angle to the zero (0) degrees, straight forward position;

b) Adjust spring tension and height at 10m forward of the front edge of the trap pit to obtain the required elevation and distance; and

c) Adjust to required angle as measured from a position immediately above the centre of each machine, on the top of the trap pit roof.

9.8.3 **Jury Checks**

9.8.3.1 **Trial Targets**

a) Each range must be set before the start of the competition and the settings must be examined, approved and sealed by the Jury;

b) Each day, after the traps have been adjusted and approved by the Jury, one (1) trial target must be thrown from each machine, in sequence, from each range in use, before the start of the competition (before the start of the first rounds of the day);

c) One (1) trial target must also be thrown from each machine, in sequence, from each range in use, in cases where there is a time break between rounds in the competition programme and the athletes cannot observe the targets of the range on which they will shoot their next round.

d) Trial targets may be observed by the athletes; and

e) All athletes, Coaches and Team Officials are prohibited from entering the trap pits after the Jury has examined and approved the trap settings (see Rule 9.3.c).

9.8.4 **Trap General Rules**

9.8.4.1 **Irregular Trajectory**

Any target flying along a path other than that specified in angle, elevation or distance must be considered irregular.

9.8.4.2 **Refused Target**

An athlete may refuse a target if:

a) A target is not released immediately after the athlete's call;

b) The Referee agrees that the athlete, after calling for the target, was **visibly disturbed** by some external cause; or

c) The Referee agrees that the target was irregular.

Procedure by Athlete – The athlete refusing a target must indicate this by

CamScanner

opening the shotgun and raising an arm. The Referee must then give his decision.

9.8.4.3 A **"NO TARGET**" target is one that is not thrown according to these Rules:

a) A **"NO TARGET"** decision is always the Referee's responsibility;

b) A target declared a **"NO TARGET"** by the Referee must always be repeated from the same trap (whether hit or not). However, the athlete may not refuse it even if he considers that it was thrown from another machine in the same group; and

c) A Referee should attempt to call **"NO TARGET"** before the athlete fires. However, if the Referee calls **"NO TARGET"** as, or immediately after the athlete has fired, the Referee's decision must stand and the target must be repeated regardless of whether the target was **"HIT"** or not.

9.8.4.4 **A "NO TARGET" target must be declared even if the athlete has fired when:**

a) A broken or irregular target emerges;

b) A target of a distinctly different colour from that of the others being used in the Competition is thrown;

c) Two (2) targets are thrown;

d) The target is thrown from a machine in another group;

e) An athlete shoots out of turn;

f) Another athlete fires at the same target;

g) The Referee is satisfied that the athlete, after calling for the target, was visibly disturbed by some external cause;

h) The Referee detects an initial violation of the athlete's foot position in a round;

i) The Referee detects an initial violation of the time limit;

j) The Referee, for any reason, cannot decide whether the target was **"HIT"** or not, (in such cases the Referee must always consult the Assistant Referees before announcing the decision);

k) The shot is discharged involuntarily before the athlete has called for the target. However, if the athlete then fires at the target with the second shot, the result must be scored. Also, the athlete must be warned and if the same situation occurs a second or subsequent time in a round, the target(s) shall be declared **"LOST"**; or

l) The first shot is a miss and the athlete's second shot misfires due to an allowable malfunction of either the shotgun or the cartridge. In this case the target must be repeated and **must be missed with the first shot** and hit only with the second shot. If the target is hit with the first shot, it must be declared **"LOST."**

9.8.4.5 **A "NO TARGET" target must be declared provided that the Athlete has NOT fired when:**

a) A target is thrown before the athlete's call;

b) A target is not released immediately after the athlete's call (see **Note**);

c) A target's trajectory is irregular (see **Note**);

CamScanner

d) There is an allowable malfunction of shotgun or cartridge; or

e) The athlete's first shot misfires due to an allowable malfunction of either shotgun or cartridge and he does not fire the second shot; If the second shot was fired, the result of that shot must be scored.

Note: Unless the Referee calls **"NO TARGET"** before or immediately after the athlete fires, no claim for an irregular target must be permitted if the target was fired upon, when the irregularity claim is based solely upon an alleged "Quick Pull" or an alleged "Slow Pull" or a deviation from the prescribed lines of flight. Otherwise, if the athlete fires the result must be recorded.

9.8.4.6 **A target must be declared "LOST" when:**

a) It is not hit during its flight;

b) It is only dusted and no visible piece is broken from it;

c) An athlete, for no permitted reason, does not shoot at a regular target for which he has called;

d) After a malfunction of shotgun or cartridge, an athlete opens the shotgun or moves the safety catch before the Referee has inspected the shotgun;

e) An athlete suffers a third or subsequent malfunction of shotgun or cartridge in the same round;

f) The first shot is a miss and the athlete fails to fire his second shot because he forgot to place a second cartridge in the shotgun, to release the stop on the magazine of a semi-automatic shotgun, or because the safety has slipped to the "safe" position by recoil of the first shot;

g) The athlete is not able to fire his shotgun because he has not released the safety or has forgotten to load;

h) The time limit is violated and the athlete has been warned once already **(Yellow Card)** in any previous round (Rule 9.16.3.g); or

i) The athlete's foot position is violated and the athlete has been warned once already **(Yellow Card)** in the any previous round (Rule 9.16.3.g).

9.9 COMPETITION RULES FOR DOUBLE TRAP

9.9.1 Conduct of a Round of Double Trap

a) Each squad member, with sufficient ammunition and all equipment necessary to complete the round, must occupy a shooting station in the order shown on the scorecard;

b) The sixth athlete must stand in the marked area behind Station 1 (Station 6) ready to move to Station 1 as soon as the first athlete has shot at a regular double and the results are known; and

c) The Referee must ensure that all preliminary procedures are completed (names, numbers, Assistant Referees, test firing, viewing of targets etc.) give the command "START."

9.9.2 Method

a) When the first athlete is ready to fire, he must raise the shotgun to the shoulder and call clearly for the double after which the double must be thrown immediately after the athletes' call.

CamScanner

b) When the result of the shots is known the second athlete must do likewise, followed by the third athlete and so on;

c) After the first athlete has fired at a regular double, he must prepare to move to Station 2 as soon as the athlete on Station 2 has fired at a regular double. The other athletes in the squad must, on their stations, do likewise in rotation from left to right;

d) This whole sequence must continue until all athletes have each shot at the required number of doubles;

e) Once the round has started an athlete may close the shotgun only after the previous athlete has completed his turn;

f) An athlete having shot, must not leave the station before the athlete on the right has fired at a regular double and the results are registered, except when the athlete has completed shooting on Station 5. In this case, he must turn clockwise and proceed immediately to Station 6, with unloaded shotgun, being careful not to disturb the athletes who are on the line as he passes by;

g) All shotguns must be carried **OPEN** and **UNLOADED** when moving between any stations.

h) Any athlete who loads his/her shotgun on a fired station before leaving it, or carries his/her shotgun loaded between any stations must be given an initial **Warning (Yellow Card)**; any further occurrences until the end of the Qualification process will result in **Disqualification (Red Card)**; and

i) Any athlete who loads his/her shotgun on Station 6 must be given an initial **Warning (Yellow Card)**; any further occurrences in the competition will result in **Disqualification**; and

j) No athlete having shot on one station may proceed towards the next station in such a way as to interfere with another athlete or match officials.

9.9.3 **Preparation Time Limit**

a) An athlete must take his/her position, close the shotgun and call for the double within twelve (12) seconds after the previous athlete has fired at a regular double and has opened the shotgun and the result is registered, or after the Referee has given the command **"START;"**

b) In case of non-compliance with this time limit, the penalties provided in these rules will be applied;

c) Where squads consist of five (5) or less athletes, preparation time must be extended to give the athlete leaving Station 5 sufficient additional time to arrive at Station 1; and

d) Preparation time limits must be controlled by the Referee.

9.9.4 **Interruption**

If a round of shooting is interrupted for more than five (5) minutes because of a technical malfunction that is not the fault of an athlete, the squad must be allowed to view one (1) regular double from each scheme before the competition resumes.

9.9.5 **Target Distances, Angles and Elevations Double Trap Setting Table**

Each trap machine must be set before the start of the competition each day according to the following Table:

CamScanner

Setting/ Scheme	Trap No.	Angle * (degrees)	Height at 10m (+/- 0.1m)	Distance (+/- 1m)
A	7 (1)	5 Left	3.00m	**55.00m** (as measured from the front edge of the pit roof)
	8 (2)	0	3.50m	
B	8 (2)	0	3.50m	
	9 (3)	5 Right	3.00m	
C	7 (1)	5 Left	3.00m	
	9 (3)	5 Right	3.00m	

*** Note:**
The angles must be set with a tolerance of one (1) degree.
Target distribution must be random, but each athlete must receive one (1) scheme A double, one (1) scheme B double and one (1) scheme C double on each station sometime during each round.

9.9.6 **Jury Check**

Each range must be set before the start of the competition each day. These settings must be examined, approved and sealed by the Jury.

9.9.6.1 **Trial Targets**

a) Each day, after the traps have been adjusted and approved by the Jury, one trial regular double must be thrown for each setting one (1) scheme A, one (1) scheme B and one (1) scheme C before each squad fires its first round for the day;

b) Trial targets may be observed by the athletes; and

c) All athletes, coaches and team officials are prohibited from entering the trap pits after the Jury has examined and approved the trap settings (See: Rule 9.3).

d) During competition, after a scheduled time break, one (1) trial regular double must be thrown for each setting, one (1) scheme A, one (1) scheme B and one (1) scheme C, before a squad fires.

9.9.7 **Double Trap General Rules**

9.9.7.1 **Irregular trajectory**

Any target flying along a path other than that specified in angle, elevation or distance must be considered irregular.

9.9.7.2 **Refused Double**

An athlete may refuse to shoot at a double if:

a) The double is not released immediately after the athlete's call;

b) The Referee agrees that the athlete, after calling for a double, was visibly disturbed by some external cause; or

c) The Referee agrees that either of the targets were irregular.

Procedure by Athlete – The athlete refusing a double must indicate this by opening the shotgun and raising an arm. The Referee must then give his decision.

CamScanner

9.9.7.3 **“NO TARGET” Double**

A **“NO TARGET”** double occurs when either or both targets are not thrown according to these Rules:

a) A **“NO TARGET”** decision is always the Referee’s responsibility;

b) A double declared as a **“NO TARGET”** by the Referee must always be repeated whether either or both targets were HIT or not; and

c) A Referee should attempt to call **“NO TARGET**” double before the athlete fires. However, if the Referee calls **“NO TARGET”** as, or immediately after the athlete has fired, the Referee’s decision must stand and the targets must be repeated regardless of whether either target of the double was **“HIT”** or not.

9.9.7.4 **A “NO TARGET” Double must be declared even if the Athlete has fired when:**

a) A broken or irregular target emerges;

b) A target of a distinctly different colour from that of the others being used in the competition is thrown;

c) Only one (1) target is thrown;

d) The targets are not released simultaneously;

e) The targets collide;

f) Fragments from one (1) target break the other target;

g) The first shot breaks both targets;

h) An athlete shoots out of turn;

i) Another athlete fires at the same double;

j) Both shots are fired simultaneously (see Rule 9.12.1.1), “Number of Malfunctions Permitted”);

k) The Referee is satisfied that the athlete, after calling for the double was visibly disturbed by some external cause;

l) The Referee detects an initial violation of the athlete’s foot position in a round;

m) The Referee detects an initial violation of the time limit;

n) The Referee, for any reason, cannot decide whether either target was **“HIT”** or not, (in such cases the Referee must always consult the Assistant Referees **before** announcing the decision); or

o) The first shot is a miss and the athlete’s second shot misfires due to an allowable malfunction of either the shotgun or the cartridge. In this case the first target must be declared **“LOST”** and the double must be repeated to determine the result of the second shot only.

9.9.7.5 **A “NO TARGET” double must be declared, provided that the Athlete has NOT fired when:**

a) The double is thrown before the athlete’s call;

b) The double is not released immediately (see **Note** below);

c) Either target’s trajectory is irregular (see **Note** below);

CamScanner

d) There is an allowable malfunction of shotgun or cartridge; or

e) The athlete's first shot misfires due to an allowable malfunction of either shotgun or cartridge. The double must be repeated to establish the result of both shots even if the second shot was fired.

Note: Unless the Referee calls **"NO TARGET"** before, as, or immediately after the athlete fires, no claim for an irregular target must be permitted if the target was fired upon, when the irregularity claim is based solely upon an alleged "Quick Pull" or an alleged "Slow Pull" or a deviation from the prescribed lines of flight. Otherwise, if the athlete fires the result must be recorded.

9.9.7.6 **A target(s) must be declared "LOS**T" when:

a) It is not **"HIT"** during its flight;

b) It is only "dusted" and no visible piece is broken from it;

c) An athlete, for no permitted reason, does not shoot at a regular double for which he has called, the targets must be declared **"LOST"** and **"LOST;"**

d) An athlete, for no permitted reason, does not shoot a second shot, the result of the first shot must be recorded and the second target declared **"LOST;"**

e) The **first shot** is declared **"LOST"** and the athlete fails to fire his second shot because he forgot to place a second cartridge in the shotgun, to release the stop on the magazine of a semi-automatic shotgun, or because the safety has slipped to the safe position by recoil of the first shot the targets must be declared **"LOST"** and **"LOST;"**

f) The athlete is not able to fire his shotgun because he has not released the safety or has forgotten to load, the targets must be declared **"LOST"** and **"LOST";**

g) The time limit is violated and the athlete has been warned once already **(Yellow Card)** in the same competition the targets must be declared **"LOST"** and **"LOST"** (Rule 9.16.4); or

h) The athlete's foot position is violated and the athlete has been warned once already **(Yellow Card)** in the same competition, the targets must be declared **"LOST"** and **"LOST"** (Rule 9.16.4).

9.9.7.7 **Result in the case of a Malfunction:**

a) The athlete shoots at the first target but an allowable malfunction prevents the firing of the second shot, the result of the first shot must be recorded and the double repeated to determine the result of the second shot only;

b) After a malfunction of shotgun or cartridge, the athlete is unable to fire a **first shot** and he opens the shotgun or touches the safety catch before the Referee has inspected the shotgun, the targets must be declared **"LOST"** and **"LOST;"**

c) After a malfunction of shotgun or cartridge, the athlete is unable to fire a **second shot** and he opens the shotgun or touches the safety catch before the Referee has inspected the shotgun, the result of the first shot must be recorded and the second target must be declared **"LOST;"**

d) An athlete suffers a third or subsequent malfunction of shotgun or cartridge in the same round on the **first shot** the targets must be declared **"LOST"** and **"LOST;"** or

CamScanner

e) An athlete suffers a third or subsequent malfunction of shotgun or cartridge in the same round on the **second shot**, the result of the first shot must be recorded and the second target must be declared **"LOST;"**

9.9.7.8 **Result in the event of an Involuntary Discharge when:**

a) A shot is discharged involuntarily before the athlete calls, the Referee must declare **"NO TARGET"** and warn the athlete; however, if the same situation occurs for a second or subsequent time in a round, both targets shall be declared **"LOST;"**

b) A shot is discharged involuntarily **after the athlete calls,** but **before the targets appear**, and he shoots a second shot, the first target must be declared **"LOST"** and the second target must be scored according to the result of the second shot. However, an athlete is permitted only one (1) occurrence in the same round. If the same situation occurs for a second or subsequent time both targets must be declared **"LOST;"** and the Referee must issue a **Warning (Yellow Card);**

c) A shot is discharged involuntarily **after the athlete calls** but **before the targets appear** and he does not shoot a second shot, the first target must be declared **"LOST"** and the double must be repeated to determine the result of the second shot only. However, an athlete is permitted only one (1) occurrence in the same round. If the same situation occurs for a second or subsequent time both targets must be declared "LOST;"

9.9.7.9 **Shooting into the Ground**

An athlete who shoots into the ground must receive an initial **Warning (Yellow Card)**. For a repetition in the same round, both targets must be declared **"LOST"** whether hit or not.

9.10 COMPETITION RULES FOR SKEET

9.10.1 Conduct of a Round of Skeet

The squad must assemble on the range in an area next to Station 1, with sufficient ammunition and all equipment necessary to complete the round.

The Referee must take charge and when all preliminary procedures are completed (names, numbers, Assistant Referees, test firing, trial of targets, etc.) give the command **"START."**

9.10.1.1 **Method**

After the command "**START**" is given:

a) The first athlete must move on to Station 1, load the shotgun with one (1) cartridge only, adopt the READY position and call for the target, after which a regular target from the high house must be thrown within an indefinite period varying randomly from zero (0) to a maximum of three (3) seconds;

Note: If an electronic-microphone system is used, it must be constructed so as to randomly insert a delay varying from 0.2 to 3.0 seconds.

b) When the result of the shot is known, the first athlete shall remain on the station, load with two (2) cartridges, adopt the READY position, and call and fire at a regular double;

c) When the results of both shots are known the first athlete must leave the station;

CamScanner

d) The second athlete must then do likewise, followed by the third athlete and so on until all the members of the squad have each shot the required sequence on Station 1;

e) The first athlete must then move on to Station 2 and shoot the required number of targets in the required sequence and time, followed in turn by each member of the squad;

f) This rotation will continue until all the required stations have been shot by all members of the squad;

g) No athlete in the squad may advance to the station before his shooting turn, before the Referee's order to shoot or before the previous athlete has completed his shooting and has left the station; and

h) No athlete having shot on one (1) station may proceed towards the next station until all the members of the squad have completed their shooting on the station or in such a way as to interfere with another athlete or impede the duties of the match officials.

9.10.2 **Competition Procedures**

9.10.2.1 **Preparation Time Limits.**

Athletes must call for and fire at their targets according to the following time limits:

a) After the Referee has given the signal to **"START**" or after the previous athlete has left the station, the next athlete must occupy the station within **ten (10) seconds;**

b) The athlete must stand with both feet entirely within the station boundaries, take his position, load the shotgun, adopt the READY position and call for the target(s) in the required sequence for the station;

c) The athlete must then call for the next single or double to be fired at from that station within the shortest time possible;

d) The maximum total time allowed to call for the required sequence for that station is thirty (30) seconds in both Qualification Rounds and Finals after the athlete has occupied the station; and

e) During Qualification Rounds, preparation time limits must be controlled by the Referee. During shoot-offs before Finals and during Finals, preparation time limits must be controlled with an electronic timing device managed by the appointed Referee.

9.10.2.2 **Target Shooting Sequence for Qualification Rounds**

Only one (1) shot may be fired at each target

STATION	TARGET	ORDER
1	Single	High
	Double	High – Low
2	Single	High
	Double	High – Low
3	Single	High
	Double	High – Low

CamScanner

4	Single	High
	Single	Low
5	Single	Low
	Double	Low – High
6	Single	Low
	Double	Low – High
7	Double	Low - High
4	Double	High – Low
	Double	Low – High
8	Single	High
	Single	Low

9.10.2.3 **Special Procedures for Station 8:**

When the squad advances to Station 8, they must stand in their shooting order behind the Referee who should be positioned approximately five (5) meters from Station 8 on an imaginary line drawn between the centres of Station 8 and Station 4.

After the Referee has declared **"START"** each athlete in turn must:

a) Take position for the high house target;

b) Load the shotgun with one (1) cartridge only;

c) Adopt the READY position;

d) Call for the target; and

e) Shoot at the high house target.

Then turn clockwise (to the right, in the direction of the target crossing post):

f) Take position for the low house target;

g) Load the shotgun with one (1) cartridge only;

h) Adopt the READY position;

i) Call for the target;

j) Shoot at the low house target; and

k) When the result of this last shot is known, the athlete must leave the station and move to the rear of the line of the athletes who have still to shoot. Each athlete must do the same in succession.

9.10.2.4 **Cartridge Loading Sequence**

at) On Station 8 for both the high and low house targets, the shotgun must be loaded with one (1) cartridge only;

b) On Station 4 where two (2) single targets are to be shot, two (2) cartridges must be loaded before calling for the first single target;

c) In case an athlete forgets to load the second barrel in singles on Station 4 (when two (2) single targets are to be shot) and after calling for or shooting at the first target, remembers and either opens his shotgun to load or he raises his hand to ask permission of the Referee to load his shotgun, the target will be

CamScanner

declared **"LOST;"**

d) When shooting is interrupted, the shotgun must be opened and be made empty; and

e) No athlete may turn from the shooting station before his shotgun is open and empty.

9.10.2.5 **Trial Targets**

A regular target from each of the high and low houses may be seen by the athletes of each squad:

a) From Station 1 immediately prior to the start of their first round on each day of competition;

b) If the Referee declares **"NO TARGET,"** the athlete may ask to have one (1) trial target thrown after each irregular target, or one (1) trial double thrown after an irregular double, provided the irregular target was not fired upon or both or either of the targets of an irregular double were not fired upon; and

c) If a round of shooting is interrupted for more than five (5) minutes because of a technical malfunction that is not the fault of an athlete, before the competition resumes the squad must be allowed to view one (1) regular target from each trap.

9.10.2.6 **Sighting On the Ranges**

Aiming and sighting exercises:

a) May be conducted after the Referee has ordered **"START"** only on **Station 1**. The athlete is permitted (within the allowable time limit) after loading and before shooting to raise the shotgun to the shoulder and sight for a few seconds for both the single target and the double;

b) The athlete must then adopt the READY position before calling for the target(s);

c) Prior to the start of the round an athlete is not permitted to make any aiming or sighting exercises with or without the shotgun on any other station; and

d) during the round, athletes who are not shooting may, without disturbing the other athletes or the Referee, use their hand to track targets while another athlete is shooting.

9.10.3 **Target Distances and Elevations**

a) Skeet traps must be set before the start of the competition according to the specifications. (In calm weather conditions targets must carry a distance of **68.00m +/- 1.00m** as measured from the face of the house behind Stations 1 and 7). The settings must be examined, approved and sealed by the Jury prior to each day of competition.

b) All athletes, coaches and team officials are prohibited from entering the Skeet houses after the Jury has examined and approved the trap settings (see Rule 9.3.c)).

c) Depending upon the number of ranges in use, the squads must be scheduled before the start of the competition under the supervision of the Jury, in such a way so that, whenever possible, each squad should shoot the same number of times on each range in use.

9.10.3.1 **Irregular Trajectory**

CamScanner

Any target flying along a path other than that specified in angle, elevation or distance, in the Rules, must be considered irregular. A target must also be considered irregular in case it does not pass the boundary.

9.10.4 **READY Position**

At the moment the athlete calls and until the target(s) appears, the athlete must stand in the READY position with:

a) Both feet entirely within the shooting station boundaries;

b) Holding the shotgun with both hands;

c) The shotgun stock in contact with the body; and

d) The toe of the stock on or below the ISSF official marker tape and clearly visible to the Referee standing in the correct position.

9.10.4.1 **Marker Tape**

To aid the Referee in controlling the position of the gun **the ISSF official marker tape** must be permanently affixed to the shooting vest (outer garment).

9.10.4.2 **The ISSF official marker tape must be:**

a) 250mm long, 30mm wide, yellow in colour, bearing the ISSF logo; and

b) Permanently affixed to the appropriate side of the shooting vest.

9.10.4.3 **Marker Tape Check**

a) Athletes are responsible for ensuring that the marker tape is correctly positioned as per Rule 9.10.4.4 below. The Jury will provide an equipment control consultation service that is available to all athletes starting on the first Pre-Event Training Day so that athletes, if they wish, may have their equipment checked prior to the competition.

b) To ensure compliance with ISSF Rules, the Jury will conduct random checks during Competition and any athlete found to be in violation of the rules must be disqualified (see Rule 9.16.5.1).

9.10.4.4 **The correct position of the marker tape must be checked as follows:**

a) All pockets of the shooting vest must be empty;

b) The athlete must stand straight (erect) while holding the right arm (right-handed shooter) in a right-angle position on the side of the body with the lower arm horizontal and the upper arm vertical. The right-angle position of the shooting arm will then be fixed with the use of a special accessory (see illustration);

c) The Jury member will then project a horizontal laser beam onto the marker tape to show the location of the point of the elbow in relation to the tape;

d) The laser beam must project onto the top half of the marker tape or higher to be legal;

e) An ISSF seal must then be placed on either end of the marker tape;

f) All illegal markers will be required to be properly positioned and subjected to re-check before the athlete is permitted to compete; and

g) Shooting vests must not be constructed with any item (tape, drawstring, elastic band, etc.) that could be used to adjust the fit of the jacket.

CamScanner

9.10.5 **Skeet General Rules**

9.10.5.1 **Refused Target**

An athlete may refuse a target if:

a) A target is not released within the proper time;

b) In a "Double" the targets are not released simultaneously;

c) The Referee agrees that the athlete, after calling for the target(s), was visibly disturbed by some external cause; or

d) The Referee agrees that a target was irregular because of a faulty trajectory.

Procedure by the athlete – The athlete refusing a target must indicate this by opening the shotgun and raising an arm. The Referee must then give his decision.

9.10.5.2 **"NO TARGET"**

a) A **"NO TARGET"** target is a target that is not thrown according to these Rules;

b) The **"NO TARGET"** decision is always the Referee's responsibility;

c) A target declared **"NO TARGET"** by the Referee must always be repeated whether hit or not; and

d) The Referee should attempt to call **"NO TARGET"** before the athlete fires. However, if the Referee calls **"NO TARGET"** as or immediately after the athlete fires, the Referee's decision must stand and the target(s) must be repeated regardless of whether they were **"HIT"** or not.

9.10.5.3 **A "NO TARGET" or "NO TARGETS" must be declared even if the athlete has fired when:**

a) A broken target emerges;

b) A target of distinctly different external colour from that of the others being used in the competition is thrown;

c) Two (2) targets are thrown in singles;

CamScanner

d) A target is thrown from the wrong trap house;

e) The athlete's READY position is incorrect and the athlete has not received a previous warning in that round;

f) The Referee detects an initial violation of the time limit;

g) The Referee detects an initial violation of the athlete's foot position in a round;

h) The Referee is satisfied that the athlete, after calling for the target(s), was visibly disturbed by some external cause;

i) The Referee for some reason, cannot decide whether the target was **"HIT," "LOST"** or **"NO TARGET."** In this case the Referee must always consult the Assistant Referee before making a final decision;

j) An athlete has an allowable malfunction of shotgun or cartridge; or

k) A shot is discharged involuntarily before the athlete calls, the Referee must warn the athlete; however, if the same situation occurs for a second or subsequent time in a round, the target(s) shall be declared **"LOST."**

9.10.5.4 **A "NO TARGET" must be declared provided the athlete has NOT fired when:**

a) A target is thrown before the athlete's call;

b) A target is thrown after a period exceeding three (3) seconds;

c) A target's trajectory is irregular; or

d) There is an allowable malfunction of shotgun or cartridge.

9.10.5.5 **Additional "NO TARGET" Rules applying to Doubles**

Both targets must be declared **"NO TARGET"** and a repeat Double thrown, to determine the result of both shots when:

a) Either target is irregular (see note);

b) A single target is thrown in doubles;

c) The first shot breaks both targets. An athlete is permitted only two (2) attempts on any one station, if the same situation occurs for the third time the first target must be declared a **"HIT"** and the second **"LOST";**

d) Fragments from the first target break the second target;

e) The targets collide;

f) The athlete suffers an allowable malfunction of shotgun or cartridge and is unable to fire the first shot; or

g) Both shots are fired simultaneously.

Note: Unless the Referee calls **"NO TARGET(s)"** before or immediately after the athlete fires, no claim for an irregular target or targets must be permitted if either target was fired upon, when the irregularity claim is based solely upon an alleged "Quick Pull," an alleged "Slow Pull" or a deviation from the prescribed lines of flight. Otherwise, if the athlete fires the result(s) must be recorded.

9.10.5.6 **Lost Target**

A target(s) must also be declared **"LOST"** when:

a) It is not **"HIT;"**

CamScanner

b) It is **"HIT"** outside the boundaries;

c) It is only "dusted" and no visible piece is broken from it;

d) An athlete, for no permitted reason, does not shoot at a regular target for which he has called;

e) The athlete is unable to fire his shotgun because he has not released the safety or has forgotten to load;

f) After a malfunction of shotgun or cartridge, an athlete opens the shotgun or touches the safety catch before the Referee has inspected the shotgun;

g) An athlete suffers a third or subsequent malfunction in the same round;

h) An athlete's READY position is not according to the rules and the athlete has been warned once already **(Yellow Card)** in the same competition (Rule 9.16.4);

i) The athlete's foot position is violated and the athlete has been warned once already **(Yellow Card**) in the same competition (Rule 9.16.4);

j) The time limit is violated and the athlete has been warned once already **(Yellow Card)** in the same competition (Rule 9.16.4); or

k) In singles, a shot is discharged involuntarily after **the athlete has called** for the target, but before the target appears. The athlete must be warned **(Yellow Card)**. The target must also be declared **"LOST"** for the second or any subsequent involuntary discharge in the same round.

9.10.5.7 **Additional "LOST" Target Rule Applying to Doubles**

In addition, the following must also apply in the case of doubles:

a) When an athlete for no permitted reason fails to fire at the **first target** of a regular double for which he has called the targets must be declared **"LOST"** and **"LOST;"**

b) When an athlete for no permitted reason fails to fire at the **second target** of a regular double for which he has called the first target must be recorded according to the result and the second target must be declared "**LOST;"**

c) An athlete misses the first target of the double and **accidentally hits the second target** with the same shot; the first target shall be declared **"LOST"** and the double repeated to determine the result of the second shot only. The athlete must always shoot at both targets in the repeated double(s);

d) A shot is discharged **involuntarily after** the athlete has called, but **before** the targets appear, the first target must be declared **"LOST"** and the double must be repeated to determine the result of the second shot only. The athlete must shoot at both targets in the repeated double; For a second or subsequent involuntary discharge in the same round the targets must be declared **"LOST"** and **"LOST"** and the Referee must issue a **Warning (Yellow Card);**

e) If an athlete **misses** the first target in a double and has an allowable malfunction on the second shot, the first target must be declared **"LOST"** and the double repeated to establish the result of the second shot only. The athlete must shoot at both targets in the repeated double;

f) If the athlete **breaks** the first target in a double and has an allowable malfunction on the second shot, the first shot must be declared "HIT" and the double repeated to establish the result of the second shot only. The athlete must shoot at both targets in the repeated double; or

CamScanner

g) If the targets of a regular double are shot in reverse order, both of them must be declared **"LOST.**

9.10.5.8 **Shooting Out of Turn**

If an athlete inadvertently shoots out of turn, the result of the shot(s) must be recorded and the athlete given an official **Warning (Yellow Card**). Any repetition in the same round must result in the target(s) shot at being declared **"LOST"** and the matter referred to the Jury. The athlete may be **Disqualified (Red Card).**

9.11 COMPETITION ADMINISTRATION

9.11.1 Shooting Schedules

a) Athletes and Team Officials must be informed of the exact start time, the squad and range schedules and the allocated positions within the squads no later than two (2) hours after the Technical Meeting on the day preceding the competition;

b) Athletes and Team Officials must be informed of the range schedules for the Pre-Event Training by 18:00 hours on the day before; and

c) If it becomes necessary to change any of the shooting schedules for any reason, the Athletes and Team Officials must be informed immediately by posting the new schedules on the Main Notice Board and the Shotgun Range Scoreboard and distributing them to all participating teams. If necessary, post the new schedules on the info boards of the official hotels.

9.11.1.1 **Replacement of an Athlete**

If an athlete has fired a shot in the competition and must withdraw, he may not be replaced. This rule will also apply for competitions composed of several parts or carried out over several days.

9.11.1.2 **Programme Interruptions**

Once shooting has started it must continue without interruption according to the programme, except for safety reasons, mechanical breakdowns, poor lighting conditions, extreme weather conditions, or other enforced delays in the programme that would seriously affect the quality of competition. Only the Chief Range Officer may interrupt the shooting, with the Jury's approval, in the event of heavy rain, storm or lightning.

9.11.2 Squadding

9.11.2.1 **Squad Composition**

a) A squad must be composed of six (6) members except when the drawing does not permit a totally even distribution; and

b) Squads of **less than five (5) are not permitted** except when an athlete is declared **"ABSENT"** at the commencement of a round or an athlete has to leave a round for any reason.

9.11.2.2 **Auxiliary Athletes (Fillers)**

a) The Organizing Committee should have available athletes of a proficient standard who may be required to act as non-competing auxiliary athletes (Fillers):

b) If the squad consists of less than five (5) members drawn by lot, it should be

CamScanner

filled with auxiliary athletes (Fillers);

c) The Organizing Committee may, with the approval of the Jury, also use auxiliary athletes (fillers) to fill squads with only five (5) members; and

d) These auxiliary athletes should have their scores posted in the normal manner on the official scorecard in order to provide continuity. However, their names and nationality must not be listed on any official document.

9.11.2.3 **Squadding Draw**

a) The drawing for the Qualification Rounds must be made so that the athletes of each country are distributed in such a way that no squad will contain more than one (1) athlete from each nation (except in the World Cup Final/Final Tournament of the Year and Olympic Games if necessary);

b) The allocation of athletes to the squads and positions within the squads must be done by the drawing of lots under the supervision of the Jury. This may be done with a computer programme suited for this purpose; and

c) The random selection of ranges and the division of the rounds must be made under the supervision of the Jury.

9.11.2.4 **Squad Adjustments**

The Jury, in conjunction with the Organizing Committee/RTS Office, and with the approval of the Technical Delegate(s), may adjust the draw, but only to ensure that the requirements of the Squadding Draw (Rule 9.11.2.3) are met.

9.11.2.5 **Shooting Order**

The shooting order of the squads and the shooting order within the squads must also be changed from day to day by the Organizing Committee/RTS Office under the supervision of the Jury. This can be done by either having the squads and the members of each squad shoot in reverse order or by splitting the squads in a manner agreed by the Jury. In the case of a one (1) day competition, the shooting order within the squads may, with the permission of the Jury, be changed from round to round.

9.11.2.6 **Absent Athlete**

If an athlete is not present on the range when his name is checked with the scorecard, the Referee must have the athlete's Bib Number and name called out loudly three (3) times within one (1) minute. If the athlete does not appear by the end of that minute the Referee must declare him "ABSENT" and he must not be allowed to join the squad and shooting must start without him.

9.11.2.7 **Makeup Round of Absent Athlete**

a) An athlete who is declared "ABSENT" must present himself to the Chief Referee before the squad has finished for that round and request permission to shoot the missed round. Failure to do so may result in disqualification.

b) The athlete will then be permitted to shoot the missed round at a time and on the range decided by the Chief Referee with a deduction of three (3) points to be applied against the last three (3) targets hit in the make-up round. The athlete should, if possible, shoot a make-up round on the same range as the one he had to leave.

9.11.2.8 **Exceptional Circumstances**

If an athlete arrives late for a competition or fails to present himself to the Chief Referee before the squad has finished that round and it can be proved

CamScanner

that the lateness was due to circumstances beyond his control, the jury must, whenever possible, give him the opportunity to take part, without disruption of the overall shooting programme. In this case the Chief Referee will determine when and where he will shoot and no penalty will be imposed.

9.12 MALFUNCTIONS

9.12.1 Malfunction Definition

Failure of a properly loaded shotgun to fire when the trigger is pulled (mechanical failure or misfire), or a defective cartridge that does not deliver its full load when the primer was struck, or when a single pull of the trigger or the involuntary operation of both triggers on a double trigger gun produces a simultaneous discharge, must be recorded as a malfunction.

9.12.1.1 Number of Malfunctions Permitted

The athlete is permitted a maximum of **two (2) malfunctions per round,** whether or not he has changed his shotgun or ammunition.

a) All regular target(s) on which any additional malfunction of shotgun or ammunition occurs in the same round will be declared **"LOST"** whether or not the athlete attempted to fire; and

b) If after a malfunction, the Referee agrees with the athlete that the shotgun is in need of repair, then action may be taken in accordance with the Rules for Disabled Shotguns (see Rule 9.12.4.1).

c) For malfunctions during Finals in individual events see Rule 9.19.6

d) For malfunctions during Mixed Team events see Rule 6.20.4.8.

9.12.2 Barrel Selection

Where an athlete is using a double-barrelled shotgun, it will be assumed that the athlete is firing the bottom barrel first (or right-hand barrel, in the case of a side by side), unless the athlete indicates to the Referee **before** each of his rounds that he intends otherwise.

9.12.3 Procedure in the Event of a Malfunction

Decisions on malfunctions of either shotgun or cartridge must be made by the Referee.

9.12.3.1 In the event of misfire due to any reason, the athlete must:

a) Keep the shotgun pointed at the target flight area.

b) Not open the shotgun.

c) Not touch the safety catch,

d) Hand the shotgun safely to the Referee for examination if asked.

e) Answer any questions from the Referee.

Note: The athlete is responsible for checking the shotgun after it is returned by the Referee.

9.12.3.2 The following are **not considered malfunctions:**

a) Faulty manipulation of the mechanism by the athlete.

CamScanner

b) Failure to place a cartridge in the correct chamber of the shotgun; or

c) Any fault attributable to the athlete.

9.12.3.3 **Ammunition Malfunctions (Misfires)**

Decisions on ammunition malfunctions must be made by the Referee. The following are considered ammunition malfunctions when the **firing pin indentation** is clearly noticeable and:

a) The powder charge is not ignited.

b) Only the primer fires.

c) The powder charge is omitted.

d) Some components of the load remain in the barrel.

e) Cartridges of the wrong size must **not** be considered as defective ammunition. (Placing a 20-gauge or 16-gauge cartridge into a 12-gauge gun is dangerous and may also subject the individual to penalties for unsafe shotgun handling).

9.12.4 **Actions after Malfunctions are Declared**

9.12.4.1 **Disabled Shotguns**

Decisions on disabled shotguns must be made by the Referee. A shotgun may be considered disabled if:

a) It cannot be fired.

b) The athlete having already suffered two (2) malfunctions of either shotgun or ammunition in a round obtains permission from the Referee to change it.

c) It fails to eject due to mechanical defect.

d) For any other reason that renders the **shotgun** unusable

9.12.4.2 If the Referee decides that the disabled shotgun or that the malfunctioning of the shotgun or ammunition is not the fault of the athlete, and that the shotgun is not repairable quickly enough, the athlete may use another shotgun if it can be obtained within three (3) minutes after the shotgun has been declared **DISABLED**.

9.12.4.3 The athlete may after obtaining the permission of the Referee, leave the squad and finish the remaining targets of the round, in a Make-Up Round, at a time to be determined by the Chief Referee.

9.12.5 **Procedures for Completing a Make-Up Round**

9.12.5.1 **Trap**

The athlete having been allocated a time and Range having the correct scheme (the same scheme as in the original interrupted round), must stand behind the station to be shot and be shown all three (3) targets from that group, after which the Referee must give the command **"START."** The athlete must then move on to the station and shoot in the normal manner. After which he must shoot from the remaining stations in order to complete the round.

9.12.5.2 **Double Trap**

The athlete having been allocated a time and Range must stand **behind the station to be shot** and there be permitted to view regular doubles scheme A, scheme B and scheme C, after which the Referee must give the command

CamScanner

"START." The athlete must then move on to the station and shoot in the normal manner at a Double. After which he must shoot from the remaining stations in order to complete the round.

9.12.5.3 **Skeet**

The athlete having been allocated a Range and time, must stand **behind the station to be shot** and there he will be permitted to view a regular high and low house target, the Referee must then give the command **"START."** The athlete must then move on to the station and shoot in the normal manner at the required number of targets. After which he must shoot from the remaining stations in order to complete the round.

9.12.5.4 **Make-Up Round (Score Certification)**

The Referee must then ensure that the scores from the make-up round and the original interrupted round are correctly totalled, signed by the athlete and the Referee, before the scorecard is taken to the RTS Office.

9.13 COMPETITION CLOTHING AND EQUIPMENT

See also G.T.R. 6.7 and G.T.R 6.22 (The ISSF Dress Code)

9.13.1 **Athletes' Clothing**

a) Sports trousers, training (athletic warm-up) trousers and jackets, for men and women and similar sports blouses, skirts/dresses for women are allowed. Blue jeans, jeans or similar trousers in non-sporting colours or any clothing that it see-through or transparent are prohibited;

b) Open toe or open heeled shoes, sandals or any other similar footwear are not allowed;

c) Shorts or skirts with the bottom of the leg not more than **15cm above** the centre of the kneecap are allowed;

d) Shirts, T-shirts and similar garments with sleeves less than 10cm in length or without sleeves are not allowed.

e) Clothing made of camouflage material is prohibited.

9.13.2 **Bib (Start) Numbers**

Bib (Start) Numbers must be worn by all athletes:

a) On their backs and above the waist;

b) At all times while participating in Pre-Event Training and in competition;

c) If the Bib Number is not worn, the athlete may not start or continue;

d) the Bib Number must display the allocated number as large as possible but should not be **less than 20mm high.**

9.13.3 **National IOC Identity**

The IOC abbreviation of the nation of the athlete and the athlete's family name and first initial must be displayed in Latin letters (IOC abbreviation at the top) on the back of the shoulder area of the outer shooting garment and above the Bib Number. The national flag may be displayed on the left side of the IOC nation abbreviation.

CamScanner

9.13.4 **Blinders**

Side blinders (on one or both sides) attached to the hat, cap, shooting glasses or to a headband, not exceeding 60mm in depth are permitted for Shotgun athletes only. The front edge of a side blinder, when viewed from the side, must not extend more than 30mm forward of the centre point of the forehead. Side blinders must be made of **plastic material only.** A front blinder not exceeding 30mm in width is permitted.

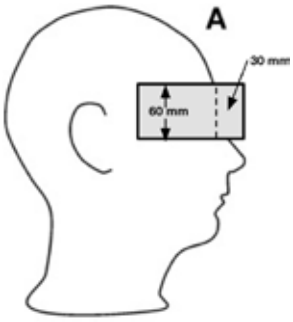

9.14 RESULTS, TIMING AND SCORING (RTS) PROCEDURES

The Jury Member responsible for shotgun results, timing and scoring procedures will be appointed by the ISSF.

9.14.1 **RTS Office**

9.14.1.1 **It is the duty of the RTS Office BEFORE the competition to:**

a) Prepare score cards for each squad;

b) Ensure that the correct score card is with the correct squad on the correct range.

9.14.1.2 **It is the duty of the RTS Office AFTER each round to:**

a) Receive and check the totals of the targets hit and verify results;

b) Record scores;

c) Post preliminary scores on the range bulletin board immediately;

d) If any result is outstanding because of a protest, such scores must be omitted for the time being and the remaining scores posted.

e) Observe any Incident Reports and any official warnings (Yellow Cards) recorded on the scorecards by the Referees during the competition rounds and prepare the necessary notifications to the Referees for possible deductions in repeated violations, in the remaining rounds of the competition.

9.14.1.3 **It is the duty of the RTS Office at the CONCLUSION of each shooting day to:**

a) Total the official scores within the shortest possible time;

b) Prepare accurate Preliminary Results for distribution to the press, team officials, Jury and Technical Delegate(s);

c) Prepare and publish accurate Final Results immediately;

d) Publish correct Final Results, in cooperation with the results provider, containing the full family name, full first name (without abbreviations), Bib

CamScanner

Numbers and IOC abbreviations of each athlete's nation as soon as possible after the close of any applicable protest period;

e) The Organizing Committee must retain the range scorecards, which show the results of every target shot at, until the conclusion of the competition.

9.14.2 **Scoring Procedures**

Scoring is done officially on each range for each round of 25 targets in Trap and Skeet or 15 doubles in Double Trap events:

a) In all ISSF Competitions, individual scores must be kept on each range by two (2) separate persons, these are usually Assistant Referees;

b) One person must maintain a permanent official scorecard;

c) The second person must maintain a manual scoreboard, except that where an electronic scoreboard is used, it must be maintained by the Referee.

9.14.2.1 **Scoreboards**

9.14.2.2 **Ranges with Electronic Scoreboards;**

The Referee must control the operation of the electronic scoreboard and ensure that the results are correctly registered.

9.14.2.3 **Two (2) persons must be appointed as Assistant Referees as follows:**

a) The first person must be positioned at the side of the firing line to function as an Assistant Referee and maintain a permanent official scorecard;

b) The second person must be positioned at the other side of the firing line to function as an Assistant Referee;

c) A third person may be appointed to maintain the official scorecard and, in this case, the other two persons will function only as Assistant Referees.

9.14.2.4 **Visible Scoreboard Errors**

If at any stage the visible scoreboard should display an incorrect score, the Referee must immediately stop the shooting and with minimum delay take whatever action is required to correct it. If for any reason, it is not possible to correct the display, the following action will be taken:

a) The official scoreboard must be examined and verified up to the point where the electronic scoreboard failed;

b) Then, if possible, to substitute quickly a manual scoreboard, enter the scores upon it up to the point of failure and continue the round;

c) If it is not possible to substitute a manual scoreboard, an additional scorecard must be introduced, the verified scores entered upon it and the round must then continue with the second scorecard under the control of a qualified person appointed by the Chief Referee; and

d) If there is a difference in the recorded scores between the two (2) scorecards, that which is under the control of the official appointed by the Chief Referee, must prevail.

9.14.3 **Ranges with Manual Scoreboards**

Three (3) persons must be appointed as Assistant Referees, as follows:

a) The first person must be positioned on the left or right side of the range to act as an Assistant Referee and also maintain the manual scoreboard;

CamScanner

b) The second person must be positioned on the opposite side and act as an Assistant Referee.;

c) The third person must be positioned at the rear of the firing line to maintain a permanent official scorecard and also to check that the scores shown on the manual scoreboard are registered correctly;

d) Each scorer must mark the card or board independently but based only on the decision given by the Referee;

e) At the conclusion of each round the results must be compared and the correct scores entered upon the official scorecard before it is delivered to the RTS Office;

f) The scores shown on the manual scoreboard must prevail if there are unresolved differences.

9.14.3.1 **Score Certification**

When a round is completed and the individual results have been compared, read aloud and agreed by each athlete, the Referee and each athlete must sign or initial the scorecard, unless the athlete does not agree with the result shown for him and it is his intention to make a protest.

9.14.4 **Results and Rankings**

9.14.4.1 **Individual Events**

For each athlete the results of each round must be recorded legibly on official scorecards and the total of the Qualification rounds, and any Shoot-offs must be recorded and the scores ranked in descending order.

9.14.4.2 **Countback Rule**

Any ties to be broken by this method must be decided as follows:

a) The scores of the last round of 25 targets (Double Trap 15 Doubles) must be compared. The winner is the athlete with the highest score in that round;

b) In a case where the tie is still not broken, the round **before** last must be compared and if still not broken, the round **before** that and so on;

c) If the results of all the rounds are still equal, ties must be decided by counting **backward, target by target,** from the **last target** of the **last round** (and if necessary, the next to last round etc.) until a tie-breaking zero (0) is found. If the tied athletes have zeroes (0) on the same target, the countback shall continue until the tie is broken.

9.14.5 **Team Events (Team and Mixed Team)**

a) Scores of each team member must be recorded and the number of all targets hit by the team members of each team in each of the Qualification Rounds must be totalled and the team's scores ranked in descending order (Ties – see Rule 9.14.4.2).

b) A team, of which a member has been disqualified, must not be ranked and must be shown in the result list with the remark **"DSQ."**

9.14.5.1 **Team Ties (Applying to both Team and Mixed Team)**

If two (2) or more teams have the same scores, rankings must be decided by the **combined** score of the team members in the last round, then by the next to last round, etc. until the tie is broken. If the tie is not broken (i.e. all the combined scores of the team members are the same, in all rounds) then ties

CamScanner

must be decided by counting **backward**, from the combined score of the team members of the **last target** of the **last round** (and if necessary, the next to last target or the next to last round etc.). The team with the lower combined score of the last target will be given the lower ranking.

Example:

TEAM 1

Athlete 1 XXXXXXXXXXXXX00XXXXXXXXXX 23

Athlete 2 XXXXXXXXXXXXXXXXXXXXXXXXX0 24

Athlete 3 XXXXXXXXXX0XXXXXXXX0XXX0X 22

Total score 69 Ranking place: **2nd**

TEAM 2

Athlete 1 XXXXXXXXXXXXX0XXXXXX0XXXX 23

Athlete 2 XXXXXXXXXXXXXXXXXXXXXXX0XX 24

Athlete 3 XXXXXXX0XXXXXXXXXXXXX0X0X 22

Total score 69 Ranking place: **1st**

9.15 TIES AND SHOOT-OFFS

9.15.1 Competitions With Finals

Ties in events with Finals will be decided according to the following Rules:

9.15.1.1 Ties Before Finals

a) After the Qualification stage of 125 targets the six (6) highest-ranking athletes will qualify for the Final, as per Rules.

b) Any ties for places 1 to 6 will be decided by a shoot-off in accordance with Rule 9.15.2.

c) The six qualified athletes in the Final will receive new bib numbers 1-6 as per qualification ranking or any eventual shoot-offs and compete in the Final, as per Rules.

d) Individual tied scores ranking 7th place and below, not decided by a shoot-off, must be ranked according to the **Countback** rule. In case of an absolute tie, the tied athletes will share the same ranking, with their names listed in alphabetical order according to their family names.

e) See Rule 6.6.6.c) for allocating ranking places of athletes competing for Minimum Qualification Score (MQS) or Ranking Points Only (RPO).

9.15.2 Shoot-Off Procedures

9.15.2.1 General

a) If the shoot-off time is not announced in advance, the athletes involved must remain in touch with the competition office whether personally or through their Coach/Team Official in order to be ready to shoot when the shoot-off is called;

CamScanner

b) Any athlete who is not in his assigned position and ready to shoot at the official starting time will be declared “ABSENT,” must not be allowed to participate in the shoot-off and will automatically be given the lower place in the shoot-off results using his qualification score.

c) The starting positions in the shoot-off will be decided by the interim Qualification ranking (highest ranking athlete to shoot first). In case of a tie with perfect scores or a tie with the same scores that cannot be broken by the count back rule, the shooting order in the shoot-off shall be determined by drawing lots.

d) In case of more than one shoot-off, the lower position shoot-off(s) must be shot first;

e) If the shoot-off result of the athletes qualifying for the Final is the same, those athletes must continue to shoot-off until the tie is broken, in order to establish their ranking;

f) Any remaining athletes with the same shoot-off result who do not gain a place in the Final (places 7 and below) must have their rankings determined according to the Countback rule;

g) Whenever possible, shoot-offs to break ties before a Final should take place on a range other than the range that will be used for the Final;

h) Shoot-offs **before** Finals must be conducted on standard targets, except when flash targets of the same type as those used in the Qualification rounds may be used.

i) Shoot-offs before Finals, whenever possible, should start within a maximum of **thirty (30) minutes** after regular shooting is completed.

9.15.2.2 **Preparation Time Limits in Shoot-offs Before Finals**

a) After the Referee gives the command **“START,”** or after the preceding athlete has fired at a regular target, an athlete must take position, load his gun and call for the target, or double, within twelve (12) seconds of occupying the station in Trap or within fifteen (15) seconds for Skeet.

b) Preparation time limits must be monitored by an electronic timing device that must be managed by a Referee selected from among the appointed Referees. In case of non-compliance with this time limit penalties will be applied.

9.15.2.3 **Trap Shoot-off Procedures before Final**

a) Before the Shoot-Off starts a left and a right target will be thrown from each of the five (5) stations. All tied athletes must then line up behind Station 1 in the order decided by their interim Qualification ranking (highest ranking athlete to shoot first). Starting on Station 1 they must shoot at regular targets (left or right) until the tie(s) are broken according to the following sequence: Station 1 left target, Station 2 right target, Station 3 left target, Station 4 right target, Station 5 left target, then Station 1 again this time shooting at a right target and so on;

b) The first athlete must on command move onto the station, load and call for the target as shown in a) above;

c) Only one (1) shot is permitted at each target; the gun must be loaded with one (1) cartridge only; the second barrel must not be loaded with any empty, dummy or loaded cartridge. For a first violation the athlete will receive a

CamScanner

Warning (Yellow Card). For any second or subsequent violation the target will be declared **"LOST;"**

d) After shooting, the athlete must move to the rear of the athlete(s) who have yet to shoot;

e) Each athlete in the tie must in turn do likewise;

f) If after all athlete(s) have shot on Station 1 and a tie remains, all athletes in the tie must move to Station 2 and repeat the procedure;

g) This system of shooting station by station must continue as long as a tie remains.

h) If an athlete inadvertently shoots out of turn, the result of the shot must be recorded and the athlete given an official **Warning (Yellow Card).** Any repetition must result in the target shot at being declared **"LOST."**

9.15.2.4 **Skeet Shoot-Off Procedures Before Final**

a) Before the shoot-off starts, the first athlete must stand immediately behind Station 4 and be permitted to see one (1) regular double;

b) All tied athletes will then shoot in turn on Station 4 in the order decided by their interim Qualification ranking (highest ranking athlete to shoot first);

c) After the Referee declares **"START,"** the first athlete must move on to the station, load and shoot at a regular double (high/low). He must then leave the station and go to the rear of the athletes who have yet to shoot;

d) All athletes in the tie must in turn do likewise;

e) The athlete(s) who miss the highest number of targets after each double will be eliminated;

f) All those who are still tied must remain and the first athlete must then move on to the station, load and shoot at a reverse double (low/high). He must then leave the station and go to the rear of the athletes who have yet to shoot;

g) All athletes still in the tie must in turn do likewise;

h) If any ties remain unbroken, this procedure of shooting at a **regular** double and a **reverse** double must continue until all results are determined.

i) If an athlete inadvertently shoots out of turn, the result of the shots must be recorded and the athlete given an official **Warning (Yellow Card).** Any repetition must result in the targets shot at being declared **"LOST."**

9.15.2.5 **Double Trap Shoot-Off Procedures**

a) Shoot-offs will be conducted on scheme "C" (machines 7 & 9).

b) All tied shooters will in turn, one behind the other, starting on Station 1, shoot at a regular double in the order that will be decided by the Jury by drawing of lots;

c) At Station 1 only, the shooters must be permitted to see one (1) regular Double, before the first shooter starts;

d) After the Referee declares **"START**" the first shooter must load and shoot at the Double. He must then leave the Station and go to stand **a minimum of 1 metre** immediately behind the next Station. The remainder of the shooters who have yet to shoot on that Station must then stand in a line behind the first athlete;

CamScanner

e) All shooters remaining in the tie must in turn do likewise;

f) The first shooter must not move on to a Station until the Referee commands **"START"**;

g) The athlete(s) who hit the highest number of targets on the respective Station are the winners of the shoot-off and qualify for the Final;

h) This process will continue until all ties are broken;

9.15.2.6 **Shoot-offs In Finals**

Shoot-offs in Finals must be conducted in accordance with Rules 6.19.4.3.b) for Skeet and 6.19.4.3.a) for Trap.

9.15.3 **Competitions Without Finals**

9.15.3.1 **Individual Ties**

Ties in competitions where there are no Finals will be decided as follows;

9.15.3.2 **Ties with Perfect Scores**

These will not be broken, but will share first place with the names listed in order according to the Latin alphabet (family names). The next rankings must be appropriately numbered.

9.15.3.3 **Ties for the First Three (3) Places**

These must be decided by a shoot-off in accordance with Rule 9.15.2.

a) Starting positions will be decided by the interim Qualification ranking (lowest ranking athlete to shoot first);

b) When several athletes are tied for more than one (1) ranking place, e.g. two tied for first place (places 1 and 2) and two athletes tied for third place (places 3 and 4), they will all shoot-off on the same range to determine the individual ranking; and

c) The tie for the lowest ranking position will be shot first, followed by the next higher-ranking positions until all ties are broken. All tied athletes will be ranked according to the score from the shoot-off series.

9.15.3.4 **Ties for 4th Place and Below**

Individual tied scores ranking in 4th place and below, not decided by a shoot-off, must be ranked according to the **Countback** rule.

9.16 RULE VIOLATIONS

The Jury, the Chief Referee and the Referee will decide on rule violations based on three (3) classes of infringements or violations of the Rules:

a) "OPEN" – unconcealed;

b) "TECHNICAL" – rule infringements of a technical nature;

c) "CONCEALED" – deliberate or very serious breaches of the rules or of safety.

9.16.1 The Jury is responsible for examining and deciding the degree of penalties to be imposed for all reported violations, that are not automatically imposed according to these rules.

CamScanner

9.16.1.1 When rule violation cards are shown, they must be accompanied by the command **“Warning” (Yellow Card)**, **“Deduction” (Green Card)** or **“Disqualification” (Red Card)** as appropriate, in a manner that leaves no doubts in the offender’s mind as to the meaning of the action taken. It is not necessary to show a warning card prior to the issuance of any deduction or disqualification card.

9.16.2 **Warning (Yellow Card)**

9.16.2.1 **Open Violations**

In the case of initial open violations of the rules, such as:

a) Dress Code violation;

b) Unnecessary interruption of the shooting;

c) Receiving illegal coaching during the competition;

d) Unauthorized intrusion into the competition area;

e) Unsportsmanlike conduct;

f) Deliberate attempt to evade the spirit of the rules;

g) Inadvertently shooting out of turn.

h) Dry firing in unauthorized areas.

i) Any other incident that requires a warning to be issued.

9.16.2.2 A **Warning (Yellow Card)** by a Jury Member, Chief Referee or Referee, will first be given so that the athlete, Coach or Team Official may have the opportunity to correct the fault.

9.16.2.3 If an athlete does not correct the indicated fault within the stipulated time, penalties will be imposed.

9.16.2.4 In repeated infringements by a Coach, or other Team Official, the Jury will require the offender to leave the vicinity of the shooting range for the remainder of the round and the athlete may be penalized.

9.16.3 **Technical Violations**

In the case of initial **technical violations during a competition** round such as:

a) Foot fault;

b) Exceeding the time limit allowed to call for the shot;

c) In Skeet, the athlete’s READY position is not according to the rules;

d) In Skeet, on station 4 the athlete opens the gun between the two (2) single shots (this does not apply on station 8);

e) Following or pointing with the gun at a slow or fast pull target without shooting;

f) A **Warning (Yellow Card)** will be shown to any offending athlete by a Referee. This must be indicated on the relevant scorecard before it is sent to the RTS office with the use of the below abbreviations while at the same time the Referee must submit also a completed Incident Report form.

FF = Foot Fault

CamScanner

TL = Time Limit

SKRP = Skeet Ready Position

OG = Opening the gun between 2 singles

FPG = Following or Pointing the Gun at a slow or fast target

g) For each second or subsequent technical violation, of the same kind in any stage of the Competition (Qualification or Final) of any of the technical violations listed above, the athlete must be penalized by the deduction of one (1) point (Green Card) by the Referee (See also: Trap Rule 9.8.4.6; Skeet Rule 9.10.5.6). This must be indicated on the scorecard by the Referee before the card is sent to the RTS Office. Also, a completed Incident Report form must be submitted to the RTS office.

Referee Procedure: The Referee must command **"STOP,"** (before the athlete shoots) inform the athlete of the penalty and display the Green Card, adjust the scoreboard and instruct the next athlete to continue.

h) The Jury in charge of RTS is responsible in providing, during all stages of the competition (Qualification and Final) the necessary information to the Referees for any recorded initial cases of Yellow Cards (first time violation), in order that they will be able to impose, if necessary, any deductions (Green Card) for any second or subsequent technical violations as stated above.

9.16.3.1 A Warning (Yellow Card) must also be given if an athlete uses ammunition that is not in accordance with Rule 9.4.3.1.b) to h) (see also Rule 9.4.3.2.e)).

9.16.4 **Deduction (Green Card) for Other Offences**

9.16.4.1 Deduction of one (1) point for other offences imposed by at least two (2) Jury Members must be applied to the result of the last round, or the round before the last etc. (last 'HIT' target) of a penalized athlete, in the following cases:

a) Impeding another athlete in an unsportsmanlike manner;

b) Failure to be present or provide a suitable substitute when required to act as Assistant Referee;

c) If when asked to give an explanation for an incident, an athlete consciously and knowingly gives false information (in serious cases this might be the cause of disqualification - see Rule 9.16.5.4.h));

d) Interfering with range equipment after an initial violation.

e) Each second or subsequent occurrence, in case an athlete uses ammunition that is not in accordance with Rule 9.4.3.1.b) to h), unless otherwise stated in the Rules, as in Rule 9.4.1. where the deduction for the use of coloured wads is five (5) points.

9.16.4.2 **Leaving the Range without Permission**

Deduction of all remaining points in the round must be given by decision of the majority of the Jury in cases when an athlete leaves the range without completing the round and without the permission of the Referee.

9.16.5 **Disqualification (Red Card)**

9.16.5.1 Disqualification **(Red Card)** is required in accordance with Rules 9.4.1.1.c) and 9.4.3.2.d) for violations involving shotguns, Skeet marker tapes or ammunition.

9.16.5.2 Disqualification according to Rule 9.16.5.4 (below) may only be given by a decision of the majority of the Jury. The disqualification of an

CamScanner

athlete is expressed by the Jury by showing a **Red Card** with the word **"Disqualification."**

9.16.5.3 If an athlete is disqualified during any phase of an event (Qualification or Final), the results for that athlete for all phases of that event must be deleted and the athlete must be listed at the end of the results list as a (DSQ) with an explanation in the legend regarding why the athlete was disqualified.

9.16.5.4 **Disqualification (Red Card)** of an athlete, or the banning of a Team Official or Coach from the shooting ranges may be given for:

a) Serious breaches of safety and violations of the safety rules;

b) Handling a shotgun in a dangerous manner (repeated accidental discharges may be a cause for consideration);

c) Handling of a loaded shotgun after a **"STOP"** command has been given;

d) Repetition of incidents that have already been the subject of a warning (Yellow Card) or deduction (Green Card);

e) Deliberate abuse of any team, range or technical official;

f) Continued refusal by an athlete to act as an Assistant Referee;

g) Deliberate failure to shoot a previously missed round;

h) Consciously and knowingly giving false information in a deliberate attempt to conceal the facts in serious cases; or

i) Cases where violations are deliberately concealed.

9.17 PROTESTS AND APPEALS

9.17.1 Disagreement with a Referee Decision during a Round

9.17.1.1 Action by Athlete

a) If an athlete disagrees with a Referee's decision regarding a particular target he must act immediately **before the next athlete fires**, raising an arm and saying **"PROTEST;"**

b) The Referee must then temporarily interrupt the shooting and after hearing the opinions of the Assistant Referees, make his decision. No protest will be accepted after the next athlete fires.

9.17.1.2 Action by Team Official

a) If a team official is not satisfied with the final decision of the Referee, except for **"HIT," "LOST," "NO TARGET"** or **"IRREGULAR"** targets, he must not delay the shooting, but must attract the attention of the Referee who will make a notation on the scorecard that the athlete is continuing under protest; and

b) The protest must be resolved by the Jury.

9.17.2 Verbal Protests

Any athlete or team official has the right to protest regarding a condition of the competition, or a decision or action by a competition official **immediately and verbally** to a Jury Member, the Chief Range Officer, the Chief Referee or a Referee.

9.17.2.1 Such protests may be made on the following matters:

a) That the ISSF Rules were not followed;

CamScanner

b) That the current published competition programme was not followed;

c) Disagreement with a decision or action of any competition official;

d) That an athlete was impeded or disturbed by another athlete, a competition official, spectators, the media or other persons or causes.

Note: Only the athlete concerned may question a decision by the Referee on a **"HIT," "LOST," "NO TARGET"** or **"IRREGULAR"** target by taking action as in Rule 9.17.1.1.a).

9.17.2.2 Competition officials who receive verbal protests must consider them immediately, take immediate action to correct the situation or refer the matter to the Jury for a decision. Shooting may be temporarily stopped if absolutely necessary.

9.17.3 **Written Protests**

a) Any athlete or team official who does not agree with the action or decision taken on a verbal protest may submit a formal protest in writing to the Jury;

b). A written protest (Protest Form P) may be submitted without first making a verbal protest.

9.17.3.1 **Protest Time Limit**

Any written protest (Protest Form P) must be **submitted to a member of the Jury within twenty (20) minutes** after the end of the round in which the alleged incident occurred. The protest must be accompanied by a 50,00 EUR fee. If the protest is denied, the fee must be given to the Organizing Committee; if the protest is upheld the fee must be returned.

9.17.4 **Appeals**

In the event of a disagreement with a Jury decision the matter may be submitted to the Jury of Appeal, except those decisions by a Finals Protest Jury may not be appealed (see Rule 6.16.6).

9.17.4.1 **Appeal Time Limit**

Such appeals must be submitted in writing **not later than** twenty (20) minutes after the Jury decision has been officially announced. The appeal must be accompanied by a 100,00 EUR fee. If the appeal is denied, the fee must be given to the Organizing Committee; if the appeal is upheld the fee must be returned. Including the initial protest fee of €50 EUR.

9.17.4.2 **Jury of Appeal Decision**

The decision of the Jury of Appeal or Finals Protest Jury is FINAL.

CamScanner

9.18 TEAM EVENTS

9.18.1 GENERAL FOR TEAM TRAP and SKEET EVENTS (See also rule 6.11.10)

a) Teams must consist of three athletes from the same nation, of the same gender and category. All team members should wear the same competition clothing with national colours and identification as per applicable Rules.

b) In each Championship, nations may enter a maximum of one (1) Team in each Team event, as per General Regulations.

c) Team members may be changed for other athletes already registered in the Championship by latest 12:00 the day before the Qualifying Competition.

d) The Team event result sheet is taken from the scores achieved by each of the three athletes in the Individual Competition.

9.19 DRAWINGS AND TABLES

9.19.1 Trap Horizontal Angles

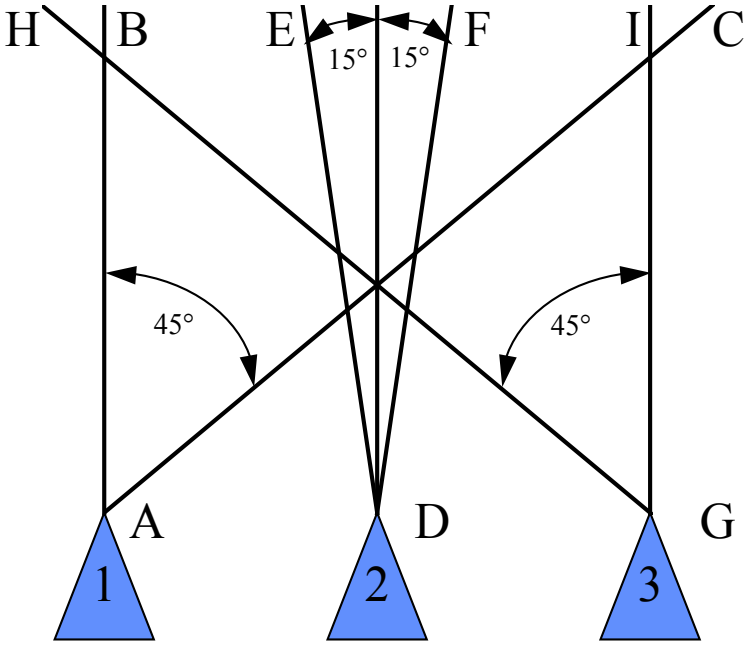

Maximum horizontal angles for first second and third trap in each group.

Targets from machine No. 1 must fall in area A B C.
Targets from machine No. 2 must fall in area D E F.
Targets from machine No. 3 must fall in area G H I.

CamScanner

9.19.2 Double Trap Horizontal Angles

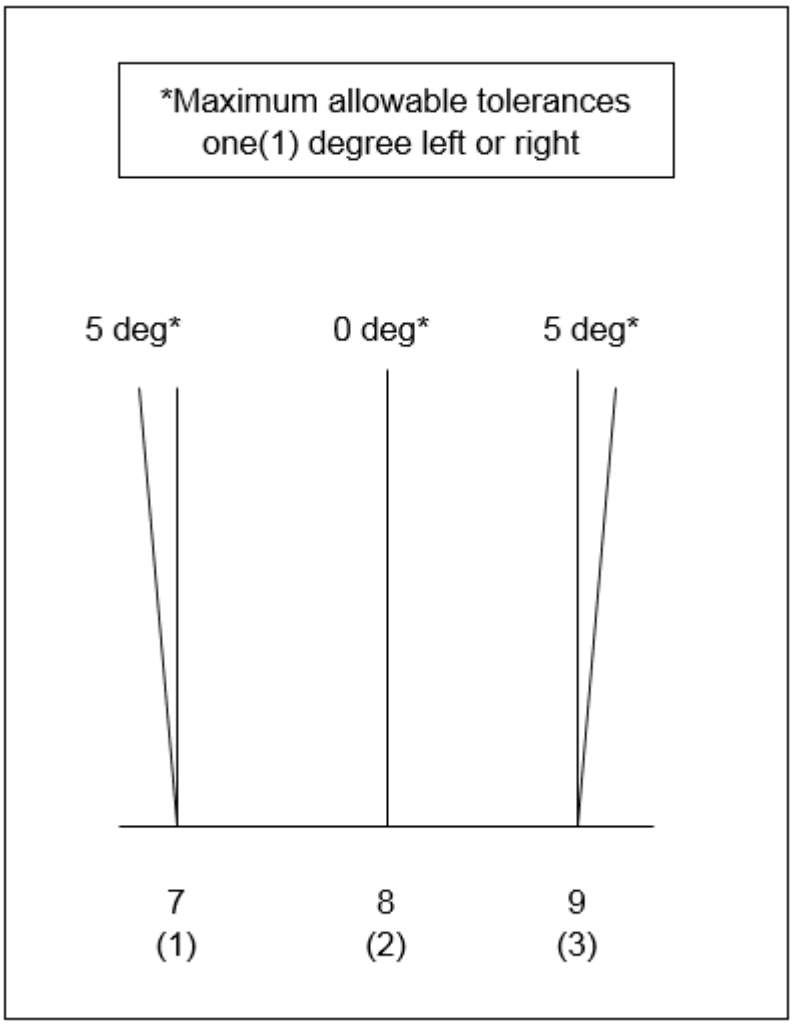

9.19.3 Trap Setting Tables (I - IX)

Table I					
Group	**Trap Number**	**Target Direction (degrees)**	**Height at 10 m over level ground**	**Distance**	**NOTE**
1	1 2 3	25 R 5 L 35 L	2.00 m 3.00 m 1.50 m	76.00 m +/-1 m	
2	4 5 6	45 R 10 R 35 L	2.50 m 1.80 m 3.00 m		
3	7 8 9	35 R 5 L 45 L	3.00 m 1.50 m 1.60 m		
4	10 11 12	40 R 0 25 L	1.50 m 3.00 m 2.60 m		
5	13 14 15	20 R 5 R 35 L	2.40 m 1.90 m 3.00 m		

Table II					
Group	**Trap Number**	**Target Direction (degrees)**	**Height at 10 m over level ground**	**Distance**	**NOTE**
1	1 2 3	25 R 5 L 35 L	3.00 m 1.80 m 2.00 m	76.00 m +/-1 m	
2	4 5 6	40 R 0 45 L	2.00 m 3.00 m 1.60 m		
3	7 8 9	45 R 0 40 L	1.50 m 2.80 m 2.00 m		
4	10 11 12	15 R 5 R 35 L	1.50 m 2.00 m 1.80 m		
5	13 14 15	35 R 5 L 40 L	1.80 m 1.50 m 3.00 m		

CamScanner

Table III					
Group	**Trap Number**	**Target Direction (degrees)**	**Height at 10 m over level ground**	**Distance**	**NOTE**
1	1 2 3	30 R 0 35 L	2.50 m 2.80 m 3.00 m	76.00 m +/-1 m	
2	4 5 6	45 R 5 L 40 L	1.50 m 2.50 m 1.70 m		
3	7 8 9	30 R 5 R 45 L	2.80 m 3.00 m 1.50 m		
4	10 11 12	45 R 0 40 L	2.30 m 3.00 m 1.60 m		
5	13 14 15	30 R 0 35 L	2.00 m 1.50 m 2.20 m		

Table IV					
Group	**Trap Number**	**Target Direction (degrees)**	**Height at 10 m over level ground**	**Distance**	**NOTE**
1	1 2 3	40 R 10 R 30 L	3.00 m 1.50 m 2.20 m	76.00 m +/-1 m	
2	4 5 6	30 R 10 L 35 L	1.60 m 3.00 m 2.00 m		
3	7 8 9	45 R 0 20 L	2.00 m 3.00 m 1.50 m		
4	10 11 12	30 R 5 L 45 L	1.50 m 2.00 m 2.80 m		
5	13 14 15	35 R 0 30 L	2.50 m 1.60 m 3.00 m		

CamScanner

Table V					
Group	**Trap Number**	**Target Direction (degrees)**	**Height at 10 m over level ground**	**Distance**	**NOTE**
1	1 2 3	45 R 0 15 L	1.60 m 3.00 m 2.00 m	76.00 m +/-1 m	
2	4 5 6	40 R 10 L 45 L	2.80 m 1.50 m 2.00 m		
3	7 8 9	35 R 5 L 40 L	3.00 m 1.80 m 1.50 m		
4	10 11 12	25 R 0 30 L	1.80 m 1.60 m 3.00 m		
5	13 14 15	30 R 10 R 15 L	2.00 m 2.40 m 1.80 m		

Table VI					
Group	**Trap Number**	**Target Direction (degrees)**	**Height at 10 m over level ground**	**Distance**	**NOTE**
1	1 2 3	40 R 0 35 L	2.00 m 3.00 m 1.50 m	76.00 m +/-1 m	
2	4 5 6	35 R 10 R 35 L	2.50 m 1.50 m 2.00 m		
3	7 8 9	35 R 5 L 40 L	2.00 m 1.50 m 3.00 m		
4	10 11 12	45 R 10 L 25 L	1.50 m 3.00 m 2.60 m		
5	13 14 15	25 R 5 R 45 L	2.40 m 1.50 m 2.00 m		

CamScanner

Table VII					
Group	**Trap Number**	**Target Direction (degrees)**	**Height at 10 m over level ground**	**Distance**	**NOTE**
1	1 2 3	35 R 5 L 20 L	2.20 m 3.00 m 3.00 m	76.00 m +/-1 m	
2	4 5 6	40 R 0 45 L	2.00 m 3.00 m 2.80 m		
3	7 8 9	40 R 0 40 L	3.00 m 2.00 m 2.20 m		
4	10 11 12	45 R 5 R 35 L	1.50 m 2.00 m 1.80 m		
5	13 14 15	20 R 5 L 45 L	1.80 m 1.50 m 2.00 m		

Table VIII					
Group	**Trap Number**	**Target Direction (degrees)**	**Height at 10 m over level ground**	**Distance**	**NOTE**
1	1 2 3	25 R 5 R 20 L	3.00 m 1.50 m 2.00 m	76.00 m +/-1 m	
2	4 5 6	40 R 0 45 L	1.50 m 3.00 m 2.80 m		
3	7 8 9	35 R 5 L 45 L	3.00 m 2.50 m 2.00 m		
4	10 11 12	45 R 0 30 L	1.80 m 1.50 m 3.00 m		
5	13 14 15	30 R 10 R 15 L	2.00 m 3.00 m 2.20 m		

CamScanner

Table IX					
Group	**Trap Number**	**Target Direction (degrees)**	**Height at 10 m over level ground**	**Distance**	**NOTE**
1	1 2 3	40 R 0 20 L	3.00 m 1.80 m 3.00 m	76.00 m +/-1 m	
2	4 5 6	15 R 10 L 35 L	3.00 m 1.50 m 2.00 m		
3	7 8 9	45 R 0 30 L	1.60 m 2.80 m 3.00 m		
4	10 11 12	30 R 5 L 15 L	2.00 m 2.00 m 3.00 m		
5	13 14 15	35 R 0 45 L	2.90 m 1.60 m 2.20 m		

CamScanner

9.20 INDEX

Absent Athlete	9.11.2.6
Absent Athlete – Exceptional Circumstances	9.11.2.8
Aiming – When Permitted	9.2.3
Ammunition – Cartridge Inspection	9.4.3.2
Ammunition – Cartridge Specifications	9.4.3.1
Ammunition – Malfunctions / Misfires	9.12.3.3
Ammunition – Not in Accordance with the Rules	9.4.3.2 d
Appeal Time Limit	9.17.4.1
Appeals	9.17.4
Application of Rules for all Shotgun Events	9.1.1
Assistant Referee – Advising the Referee	9.5.6.3
Assistant Referees – Duties	9.5.6.2
Athlete – Replacement	9.11.1.1
Athlete's Clothing	9.13.1
Athlete's Equipment on Field of Play	9.4.1.2
Auxiliary Athletes – Fillers	9.11.2.2
Barrel Selection	9.12.3
Barrels	9.4.2.7
Bib (Start) Numbers	9.13.2
Blinders and Side Blinders	9.13.4
Broken Target	9.7.3
Buttstock Depth	9.4.2.10
Carrying Guns – Safety	9.2.2
Cartridge Inspection	9.4.3.2
Changing Guns	9.4.2.5
Chief Referee – Duties	9.5.4.2
Chief Range Officer – Duties	9.5.3.3
Chief Range Officer – Responsibilities	9.5.3.2
Commands	9.2.6
Compensators	9.4.2.6
Competition Clothing (Rule 6.7) and Equipment	9.13
Competition Clothing – Open Toe or open heeled Shoes	9.13.1 b
Competition Officials	9.5
Count Back Rule before the Finals	9.15.1.1 d
Deduction (Green Card)	9.16.4
Deduction of one Point	9.16.4.1

CamScanner

Disabled Shotguns	9.12.4.1
Disagreement with Referee's Decision	9.17.1
Disqualification (Red Card)	9.16.5
Double Trap – "Lost" Targets	9.9.7.6
Double Trap – "No Target" – Double	9.9.7.3
Double Trap – "No Target" – Referee's Decision	9.9.7.3 a
Double Trap – "No Target" even if Athlete has fired	9.9.7.4
Double Trap – "No Target" if Athlete has not fired	9.9.7.5
Double Trap – Competition Rules	9.9
Double Trap – Conduct of a Round	9.9.1
Double Trap – Horizontal Angles	9.19.2
Double Trap – Interruption – View of Targets	9.9.4
Double Trap – Involuntary Discharge	9.9.7.8
Double Trap – Irregular Trajectory	9.9.7.1
Double Trap – Jury Check	9.9.6
Double Trap - Malfunction	9.9.7.7
Double Trap – Method	9.9.2
Double Trap – Preparation Time Limit, additional Time to leave Station 5	9.9.3
Double Trap – Range (Separate Range) Drawing (Rule 6.4.19.4)	9.1.5
Double Trap – Refused Double	9.9.7.2
Double Trap – Refused Target – Procedure by the Athlete	9.9.7.2 c
Double Trap – Shooting into the Ground	9.9.7.9
Double Trap – Simultaneous Discharge	9.9.8.1 j / 9.12.1
Double Trap – Target Distances, Angles and Elevations	9.9.5
Double Trap – Trap Setting Table	9.9.5
Double Trap – Trial Targets	9.9.6.1
Drawings and Tables	9.19
Drawings, Figures and Tables (Rule 6.4.18.4)	9.1.5
Dry Firing Area	9.2.3 a
Ear Protection	9.2.7
Electronic Scoreboards	9.14.2.2
Electronic Scoreboards – Visible Scoreboards Errors	9.14.2.4
Equipment and Ammunition	9.4
Equipment on Field of Play	9.4.1.2
Equipment Control	9.4.1.1
Equipment Control – Skeet Marker Tape	9.10.4.2
Equipment Restrictions	9.4.1
Events	9.6.1

CamScanner

Eye Protection	9.2.7
Figures and Tables	9.1.5
High Visibility Jackets – Safety	9.2.1
Hit Target	9.7.4
Individual Results	9.14.4.1
Individual Ties in Competitions without Finals	9.15.3.1
Interfere with Range Equipment	9.3.c
Interruptions – Double Trap	9.9.4
Interruptions to Programme	9.11.1.2
Interruptions – Trap	9.8.4
Irregular Target	9.7.2
Jury – Duties before the Competition	9.5.2.1
Jury – Duties during the Competition	9.5.2.2
Jury – Majority Decision	9.16.5.2
Jury's Responsibility and Actions	9.16.1
Knowledge of the Rules	9.1.2
Left-handed Athlete – Right-handed Athlete	9.1.3
Lost Target(s)	9.7.5
Magazines	9.4.2.4
Make-up Round of Absent Athlete	9.12.4.3
Make-up Round – Double Trap	9.12.5.2
Make-up Round – Procedures	9.12.5
Make-up Round – Score Certification	9.12.5.4
Make-up Round – Trap	9.12.5.1
Make-up Round – Skeet	9.12.5.3
Malfunctions	9.12
Malfunctions – Actions after a Malfunction is declared	9.12.4
Malfunctions – Number of Malfunctions permitted	9.12.1.1
Malfunctions – Procedure in Event of a Malfunction	9.12.3
Malfunctions – Procedure to be followed by the Athlete	9.12.5
Malfunctions – Definition	9.12.1
Manual Scoreboards	9.14.3
Match Administration	9.11
Men's Events/Women's Events	9.1.4
Misfire – Ammunition Malfunction	9.12.3.3
Mixed Team Trap	9.19
National IOC Identity	9.13.3
No Target	9.7.6

CamScanner

Open Violations	9.16.2.1
Optical Sights	9.4.2.9
Ported Barrels	9.4.2.7
Pre-Event Training	9.6.2.1
Programme Interruptions	9.11.1.2
Protest – Action by Athlete	9.17.1.1
Protest – Action to be taken by a Team Official	9.17.1.2
Protest – To the Referee	9.17.1.1
Protest Time Limit	9.17.3.1
Protests and Appeals	9.17
Protests and Appeals except Decisions by a Finals Protest Jury	9.17.4
Protests and Appeals Time Limit	9.17.4.1
Range and Target Standards	9.3
Rankings	9.14.4
Referees	9.5.5
Referees – Duties and Functions	9.5.5.2
Regular Target	9.7.1
Release Triggers	9.4.2.2
Replacement of an Athlete	9.11.1.1
Results and Rankings	9.14.4
Results, Timing and Scoring Procedures	9.14
RTS (Results, Timing and Scoring) Office	9.14.1
Right-handed Athlete – Left-handed Athlete	9.1.3
Rule Violations	9.16
Safety	9.2
Safety – STOP Command	9.2.5
Score Certification	9.14.3.1
Scoreboards	9.14.2.1
Scoreboards – Visible Scoreboard Errors	9.14.2.4
Scorecards – Maintained by the Assistant Referees	9.14.2.4 c
Scoring Procedure	9.14.2
Shoot-offs	9.15.2
Shoot-offs – General	9.15.2.1
Shoot-offs – Procedures	9.15.2
Shoot-offs – Skeet	9.15.2.4
Shoot-offs – Trap	9.15.2.3
Shoot-offs – Athletes Preparation Time	9.15.2.2
Shoot-offs before Finals	9.15.2.2

CamScanner

Shooting and Test Firing	9.2.4
Shooting Order	9.11.2.5
Shooting Schedules	9.11.1
Shotguns	9.4.2
Shotguns – Changing	9.4.2.5
Shotguns – Compensators and Barrel Attachments	9.4.2.6
Shotguns – Magazines	9.4.2.4
Shotguns – Optical Sights	9.4.2.9
Shotguns – Ported Barrels	9.4.2.7
Shotguns – Release Trigger	9.4.2.2
Shotguns – Slings	9.4.2.3
Shotguns – Types permitted	9.4.2.1
Shotguns, Equipment and Ammunition	9.4
Side Blinders	9.13.4
Skeet – “Lost” Targets	9.10.5.6
Skeet – “Lost” Targets applying to Doubles	9.10.5.7
Skeet – “No Target” – Referee’s Decision	9.10.5.3
Skeet – “No Target” applying to Doubles	9.10.5.5
Skeet – “No Target” even if Athlete has fired	9.10.5.3
Skeet – “No Target” if Athlete has not fired	9.10.5.4
Skeet – Cartridge Loading Sequence	9.10.2.4
Skeet – Competition Rules	9.10
Skeet – Conduct of a Round	9.10.1
Skeet - Interruption	9.10.2.5 c
Skeet – Irregular Trajectory	9.10.3.1
Skeet – Marker Tape	9.10.4.1
Skeet – Marker Tape Check	9.10.4.3
Skeet – Method	9.10.1.1
Skeet – Preparation Time Limit	9.10.2.1
Skeet – Procedures for Station 8	9.10.2.3
Skeet – Ready Position	9.10.4
Skeet – Refused Target	9.10.5.1
Skeet – Refused Target – Procedure by the Athlete	9.10.5.1 d
Skeet – Shooting out of turn	9.10.5.8
Skeet – Sighting / Aiming on the Ranges	9.10.2.6
Skeet – START	9.10.1 / 9.10.2
Skeet – Target Distances and Elevations – Jury Check	9.10.3
Skeet – Target Setting Distances, Angles and Elevations	9.10.3

CamScanner

Skeet – Target Shooting Sequence for Qualification Rounds	9.10.2.2
Skeet – Trial Targets	9.10.2.5
Skeet Ranges – Layout Drawing (Rule 6.4.20.3)	9.1.5
Skeet Ranges – View Drawing (Rule 6.4.20.4)	9.1.5
Slings	9.4.2.3
Squad Adjustments	9.11.2.4
Squadding	9.11.2
Squadding – Composition	9.11.2.1
Squadding Draw	9.11.2.3
Squads – Shooting Order	9.11.2.5
Stop Command	9.2.5
Target Setting – Skeet Distances, Angles and Elevations	9.10.3
Targets – Regular / Irregular / Broken / Hit / Lost / Target	9.7
Team Results	9.14.5
Team Ties	9.14.5.1
Technical Violations	9.16.3
Test Firing – After a Gun Repair	9.2.4 e
Test Firing – Shooting and Test Firing	9.2.4
Testing of cartridges sold at Championships	9.4.3.2 c
Three or more Tied Athletes for more than one Ranking Place	9.15.3.3
Ties (without Finals) – 4th Place and below	9.15.3.4
Ties (without Finals) – For the first three Places	9.15.3.3
Ties (without Finals) – Ties with Perfect Scores	9.15.3.2
Ties and Shoot-offs	9.15
Ties before the Finals	9.15.1.1
Ties in Competitions with Finals	9.15.1
Ties in Competitions without Finals	9.15.3
Training	9.6.2
Training – Pre-Event (Official)	9.6.2.1
Training – Unofficial	9.6.2.2
Trap – “Lost” Targets	9.8.4.6
Trap – “No Target”	9.8.4.3
Trap – “No Target” – Responsibility of the Referee	9.8.4.3 a
Trap – “No Target” even if Athlete has fired	9.8.4.4
Trap – “No Target” if Athlete has not fired	9.8.4.5
Trap – Competition Rules	9.8
Trap – Conduct of a Round	9.8.1
Trap – Drawings and Tables	9.19

CamScanner

Trap – Horizontal Angles	9.19.1
Trap – Interruption – View of Targets	9.9.4
Trap – Irregular Trajectory	9.9.7.1
Trap – Jury Checks	9.9.6
Trap – Method	9.9.2
Trap – Mixed Team Event	6.20
Trap – Preferred Special Settings for the Trap Event	9.8.5.2
Trap – Preferred Special Settings not used	9.8.5.2
Trap – Preparation Time Limit, additional Time to leave Station 5	9.9.3
Trap – Refused Target	9.8.4.2
Trap – Refused Target – Procedure by the Athlete	9.8.4.2
Trap – Setting Table	9.9.5
Trap – Target Distances, Angles and Elevations	9.8.5
Trap – Target Limits	9.8.2.3
Trap – Trap Setting Procedure	9.8.2.4
Trap – Trial Targets	9.9.6.1
Trap – Using only one Range Setting	9.8.5.2 d
Trap and Double Trap Pit (Rule 6.4.18.5)	9.1.5
Trap Horizontal Angels	9.19.1
Trap Ranges (Rule 6.4.18.4)	9.1.5
Trap Setting Tables (I - IX)	9.19.3
Types of Shotguns	9.4.2.1
Uncompleted Round – Deduction of remaining Points	9.16.4.2
Unofficial Training – No Advantage	9.6.2.2
Verbal Protests	9.17.2
Visible Scoreboard Errors	9.14.2.4
Warning (Yellow Card)	9.16.3 f
Warning issued by the Referee	9.5.5.5
Women’s Events/Men’s Events	9.1.4
Written Protests	9.17.3

CamScanner

50 AÑOS

CONFEDERACIÓN AMERICANA DE TIRO | SHOOTING CONFEDERATION OF THE AMERICAS

1973-2023

CAT

CamScanner

10
RUNNING TARGET RULES

FOR

10m Running Target

10m Running Target Mixed

50m Running Target

50m Running Target Mixed

CamScanner

10.1 **GENERAL** 457
10.2 **SAFETY** 457
10.3 **RANGE AND TARGET STANDARDS** 457
10.4 **STANDARDS FOR 50m AND 10m RIFLES** 457
10.5 **CLOTHING REGULATIONS** 458
10.6 **COMPETITION OFFICIALS** 460
10.7 **SHOOTING EVENT PROCEDURES AND COMPETITION RULES** 462
10.8 **MEDAL MATCH RULES** 466
10.9 **INFRINGEMENTS AND DISCIPLINARY RULES** 467
10.10 **MALFUNCTIONS** 468
10.11 **FAILURE OF 10m EST SYSTEMS** 469
10.12 **TIE-BREAKING** 469
10.13 **TARGET MIXED TEAM** 470
10.14 **RUNNING TARGET SPECIFICATION TABLE** 474
10.15 **DRAWINGS** 474
10.16 **INDEX** 475

NOTE:

Where figures and tables contain specific information, these have the same authority as the numbered rules.

CamScanner

10.1 GENERAL

10.1.1 These Rules are part of the ISSF Technical Rules and apply to all 10m and 50m Running Target events.

10.1.2 All athletes, team leaders and officials must be familiar with the ISSF Rules and ensure that these Rules are enforced. It is the responsibility of each athlete to comply with the Rules.

10.1.3 When a Rule refers to right-handed athletes, the reverse of that Rule refers to left-handed athletes.

10.1.4 Unless a Rule applies specifically to a men's or women's event, it must apply uniformly to both men's and women's events.

10.2 SAFETY

SAFETY IS OF PARAMOUNT IMPORTANCE

ISSF Safety Rules are found in Rule 6.2.

10.3 RANGE AND TARGET STANDARDS

Target and target standards are found in Rule 6.3. Requirements for ranges and other facilities are found in Rule 6.4.

10.4 STANDARDS FOR 50m AND 10m RIFLES

See **RUNNING TARGET RIFLE SPECIFICATION TABLE** (10.14)

Any rifle that meets the following standards may be used:

10.4.1 The weight of the rifle and sight together must not exceed 5.5kg.

10.4.2 An adjustable butt-plate is permitted. The curvature of the butt plate (positive or negative) must not exceed a depth or height of 20mm. The butt plate length must not exceed 150mm. Measurement of the depth or height of the butt-plate will be made at right-angles to the center-line of the bore of the rifle (see Table). The lowest point of the butt-plate, in its lowest position must not be lower than 200mm below the center-line of the bore of the rifle (see Table).

10.4.3 **Sights**

The height of the center line of the telescope above the center line of the bore must not be more than 75mm.

10.4.3.1 **50m Rifles.** Any types of sights are permitted.

10.4.3.2 **10m Rifles.** Any type of sights are permitted except that optical sights must be non-variable with a maximum of four power (4X) magnification (tolerance = +0.4 x). Examination of magnification power will be done with mechanical or optical devices.

10.4.3.3 Except when a sight is damaged, through mechanical or optical failure, it may not be exchanged between slow and fast runs, before the medal matches, or between the two series of a mixed competition. Sight adjustments during the event are permitted, provided they do not delay the shooting.

10.4.3.4 **Barrel Weights.** Only barrel weights within a radius of 60mm from the center of the barrel are permitted.

10.4.3.5 **One Rifle Per Event.** The same rifle, including the sight, weights and trigger

CamScanner

system, must be used for slow and fast runs in any event.

10.4.3.6 **Specific Standards for 50m Rifles**

a) The trigger pull weight must be not less than 500 grams;

b) The weight of the trigger pull must be measured with the barrel held vertically;

c) The length of the system measured from the rear of the closed bolt in the discharged position to the foremost end of the system, including any extension (whether part of the barrel or not), must not exceed 1000mm; and

d) Only caliber 5.6mm (.22”) Long Rifle ammunition is permitted.

10.4.4 **Specific Standards for 10m Rifles**

a) The trigger pull weight is unlimited;

b) A set trigger must not be used;

c) The length of the system measured from the rear of the mechanism to the forward end of the system, including any extension (whether part of the barrel or not), must not exceed 1000mm; and

d) Pellets of any shape, made of lead or other soft material, with a caliber of 4.5mm (.177”) are permitted.

10.4.5 **Pre- and Post-Competition Equipment Checks**

10.4.5.1 Athletes are responsible for ensuring that all items of equipment used by them comply with these Rules. The Equipment Control Section must be open to inspect athletes’ equipment from the Official Training Day until the last day of Running Target competition. Athletes are encouraged, if they wish, to bring their equipment for an Equipment Control check before the competitions to be sure they comply with these Rules.

10.4.5.2 Random post-competition checks will be made of all equipment items to ensure compliance (6.7.9).

10.5 CLOTHING REGULATIONS

10.5.1 **Marker Tape**

10.5.1.1 The ISSF Official Marker Tape must be worn to allow the Range Officer or Jury Member to see the position of the rifle stock.

a) The Marker Tape must be as available from the ISSF;

b) The Marker Tape must be 250mm long, 30mm wide and of yellow colour with a black border and bearing the ISSF logo; and

c) It must be permanently affixed on the right side of the outer garment.

CamScanner

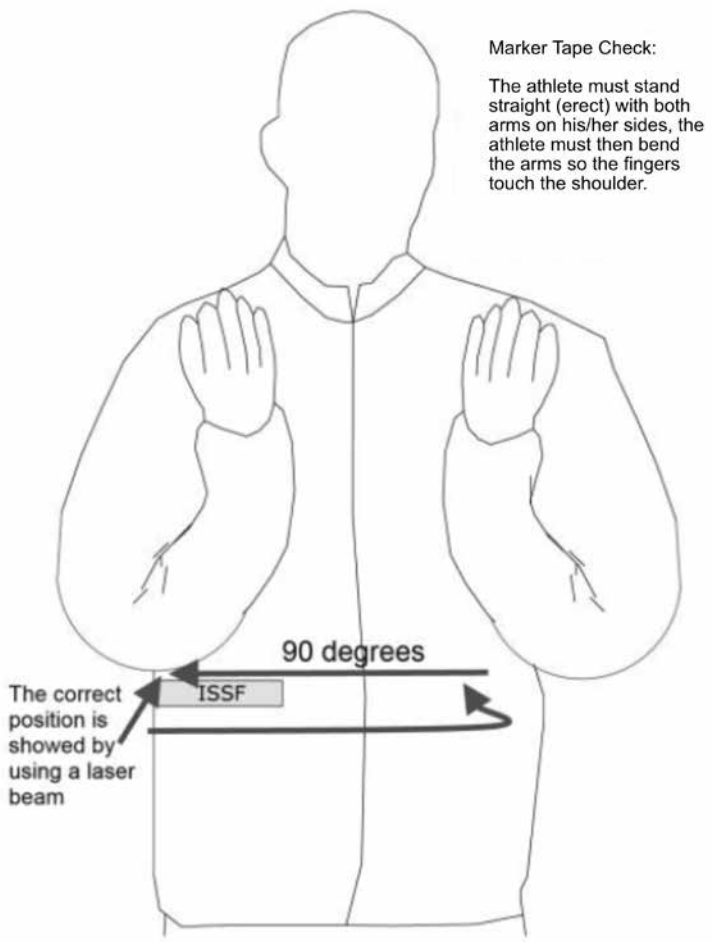

10.5.1.2 The correct position of the Marker Tape must be checked as follows:

a) Any pockets of the outer garment must be empty;

b) The trigger arm, touching the body, must then be bent into the fully closed upward angled position with no upward lift of the shoulders;

c) The Marker Tape must be permanently affixed, horizontally, below the tip of the elbow (see drawing); and

d) The Marker Tape may be checked by Equipment Control prior to the competition and marked with a seal or stamp (see drawing).

CamScanner

10.6 COMPETITION OFFICIALS

10.6.1 Duties and Functions of the Chief Range Officer

A Chief Range Officer must be appointed for each event on a specific range. The Chief Range Officer is:

a) In charge of all Range Officers and range personnel and is responsible for the correct conduct of the shooting event and, where centralized control is exercised, responsible for giving all range commands;

b) Responsible for ensuring the co-operation of all range personnel with the Jury;

c) Responsible for resolving any irregularities which other Range Officers cannot resolve;

d) Responsible for the rapid correction of any equipment failures and for making available the necessary experts and material to operate the range. A repair service expert must be at the Chief Range Officer's immediate disposal at all times. For cases that exceed the capabilities of the repair service, additional provisions must be made;

e) Responsible for the efficient and rapid scoring of all targets in co-operation with the Chief RTS (Results, Timing and Scoring) Officer; and

f) If necessary, the Chief Range Officer participates in the drawing of lots for the assignment of firing points.

10.6.2 Duties and Functions of the Assistant Chief Range Officer

If the competition is being shot on several ranges, an Assistant Chief Range Officer should be appointed. He also substitutes for the Chief Range Officer during his absence.

10.6.3 Duties and Functions of the Range Officer

Range Officers are responsible to the Chief Range Officer for the orderly operation of a particular range. They work closely with the Jury. The Range Officer:

a) Calls the athletes and announces the preliminary result of the series;

b) Checks the names and bib numbers of athletes to ensure that they correspond with the start list, Range Register and small scoreboards. If possible this must be completed before the start of the Preparation Time;

c) Gives the necessary competition commands;

d) Continually watches the **READY** and shooting positions;

e) Is responsible for the coordinated work of the Register Keeper (when using paper targets) and other range officials;

f) Supervises the correct operation of the targets;

g) Receives protests and passes them on to a Jury Member; and

h) Records all disturbances, disciplinary actions, malfunctions, additional sighting shots, repeats, etc. on the Register Keeper's score card.

10.6.4 Duties and Functions of the Register Keeper – Paper Targets

a) Examines the entries on the range assignment list and score cards to ensure that the names of the athletes, bib numbers, range numbers and

CamScanner

nations agree;

b) Writes down the indicated score and compares this with the TV monitor when it is in use; and

c) Make entries on score cards in such a way that the RTS Office can identify right and left runs.

10.6.5 **Duties and Functions of the Line Officer**

a) The Line Officer must be located so he can observe the readiness of the athlete and is able to hear the athlete's **"READY"** command;

b) He must be able to observe the score keeping system after each shot, see the result of scoring, and at the same time observe the signal to start the target;

c) He operates the starting button, the stop button, and the switch to change from slow to fast runs; and

d) If no electronic programme switch is provided for the mixed runs event, the necessary switching must be executed under a plan approved by the Jury.

10.6.6 **Duties and Functions of the Pit Officer – Paper Targets**

A Pit Officer and an assistant must be stationed at each side of all ranges used during the competition. Depending on the system used, target changing can be done with one pit officer and an assistant if adequate safety baffles are available. The pit officer or his assistant is responsible for changing the target during the standard rhythm time. The pit officer is responsible for:

a) Ensuring that the correct targets are attached to the frame in the specified sequence;

b) Correct positioning of the targets or repair centers, correctly applying patches to cover bullet holes, establishing the rhythm of score indicating, etc.;

c) Examining the target after each run and ensuring that every shot is correctly signalled for both value and location;

d) Ensuring that the target is facing in the correct direction before each run;

e) Giving bullet holes close to a scoring ring the lower value when indicating the score;

f) Removing targets from the frame at the conclusion of each stage and place them in a secure container to await transfer to the RTS Office;

g) Target couriers must transmit targets and report sheets to the RTS Office at least after every second athlete finishes firing;

h) Covering sighting shots on 50 m targets with black patches;

i) Each series begins with four 4 sighting shots. In 50 m disciplines, if the athlete does not shoot the sighting shots, black patches must be stuck on the corresponding targets outside the rings; and

j) Competition shot holes on 50m targets must be covered with transparent patches. Only the outer part of shot holes which are close to a scoring ring should be covered to assist the RTS Office in scoring. The last hit on each target must remain uncovered.

10.6.7 **Specific Rules For 10m Events**

Depending on the system used, target changing can be done with one Pit

CamScanner

Range Officer and an assistant if adequate safety baffles are available. The Pit Range Officer or his assistant is responsible for changing the target during the standard rhythm time.

10.6.8 **Technical Officers – Electronic Scoring Targets (EST)**

Technical Officers may be appointed by the Official Results Provider to operate and maintain EST systems. They may offer advice to Range Officers and Jury Members, but must not make any decisions regarding the application of these rules.

10.7 SHOOTING EVENT PROCEDURES AND COMPETITION RULES

10.7.1 **Positions**

10.7.1.1 Until the moment that any part of the target becomes visible in the opening, the athlete must remain in the **READY position**, holding the rifle with both hands in such a way that the lower tip (toe) of the butt-plate is equal to or below the mark on the shooting jacket. The mark must be visible to a Jury Member or Range Officer while the athlete is in the READY position.

10.7.1.2 The **Shooting Position** is standing without support. The rifle butt-plate must be held against the shoulder (upper right chest) and supported only with both hands. The left arm (right arm for left-handed athlete) must not rest on the hip or the chest. The athlete must take a position in relation to the bench, table, or wall in such a way that it is clearly visible that they do not give him any support whatsoever. The use of a sling is not permitted.

10.7.1.3 The **Run** is the time when the target is visible in the opening. The timing of the run must start when the leading edge of the target appears and stop when the leading edge of the target reaches the opposite wall.

10.7.2 **50m and 10m Events – Programmes**

10.7.2.1 **50m and 10m 30 + 30 shots** (Men, Women, Men Junior, and Women Junior):

a) 4 sighting shots and 30 shots slow runs, each in 5.0 seconds (+0.2 seconds); and

b) 4 sighting shots and 30 shots fast runs, each in 2.5 seconds (+0.1 seconds).

10.7.2.2 **50m and 10m 40 shots Mixed Runs** (Men, Women, Men Junior, and Women Junior):

a) The event will be fired in two (2) series of four (4) sighting shots (one (1) slow and one (1) fast run from each side) and 20 mixed runs; and

b) Each mixed run event must have 10 slow and 10 fast runs from each side, arranged in such a way that the athlete must fire an equal number of runs of each speed from each side. The runs must be mixed in such a manner that it is unlikely the athlete can anticipate whether the next run is slow or fast. There must not be more than five (5) continuous (combined right and left) runs at the same speed.

10.7.2.3 All events can be conducted in either one (1) or two (2) days, depending on the number of entries in the competition. If an event is conducted in two (2) days, one (1) complete series must be conducted each day.

10.7.3 **Competition Rules**

10.7.3.1 a) Every athlete must shoot the entire competition on the assigned range.

CamScanner

b) Any change in range assignments may be made only if the Jury decides that there are different range conditions such as light conditions;

c) If the event is conducted in one (1) day, the order of shooting for the second stage must remain the same as the order of shooting for the first stage; and

d) If the event is conducted over two (2) days the athlete in the lowest ranking position at the end of the first day shoots first on the second day, and the athlete in the highest-ranking position at the end of the first day shoots last on the second day.

10.7.3.2 Before the start of the competition, the first athlete must be given the opportunity to dry fire a full series in the event being shot. If the first athlete does not wish to **dry fire** a full series, it is still necessary to run a full series.

10.7.3.3 At ISSF Championships, the Organizing Committee must open the day's competition by having a test athlete (someone not in the competition) shoot a full series commencing at the official start time, so that the first athlete may complete the dry firing series under competition conditions.

10.7.3.4 Only the next athlete in succession may dry fire, at a specially marked point on the firing line (see Rule 6.4.15).

10.7.3.5 The competition series always starts with a run from the right to left. Only one shot may be fired on each run.

10.7.3.6 **Indication of Shots**

a) Different methods for indicating the score and location of hits may be used. The method used must allow the athlete to be certain of the score and location of the shot;

b) Television or similar monitoring devices that indicate scores and hit locations are permitted for any competition and are compulsory in ISSF Championships;

c) The athlete is not required to use the television monitor. If he does not use it, he must accept the alternative method of indicating scores and hit locations; and

d) If an athlete observes a discrepancy between the monitor and the alternative method of indicating scores and hit locations, he may request the signal to be repeated, but he is not entitled to another shot even if the first signal was in error. If a repeat signal is requested, this must be before shooting again.

10.7.3.7 **Preparation Time**

After the athlete is called to the shooting station, he must be given a preparation time of two (2) minutes before the first **"READY"** is to be given.

10.7.4 **Firing Procedures**

a) When the athlete has finished his preparation on the range, he must call **"READY"** before each sighting shot and also before the first shot of the series;

b) The Range Officer must start the target immediately. If the target does not appear in four (4) seconds after the order to start is given or after completion of the indication of the score, the Range Officer must stop the shooting and make sure that the range equipment and the athlete are ready, after which he will start the target again;

c) If the target is started before the athlete has called **"READY,"** he should refrain from shooting. However, if he shoots, the result must be scored;

CamScanner

d) If the Range Officer finds that the athlete delays unnecessarily before calling **"READY"** or taking the READY position, the following action will be taken. In the case of the first occurrence he will be given a **Warning (Yellow Card)** for delay of competition. On the second occurrence a two (2) point **Deduction (Green Card)** will be given. Any subsequent violation could result in **Disqualification (Red Card)** by the Jury;

e) After completing the sighting runs, the athlete may pause for up to 60 seconds to adjust his sight. The MATCH series will then be started;

f) After each run, the score and location of each shot hole must be shown for at least 4 seconds. The end of the indication of the score is always the signal to the athlete for the continuation of the series;

g) It is necessary to set a constant rhythm (time cycle) and system in the time taken to indicate the score, the method to indicate the score and the method to change targets;

h) In 50m MATCH firing, following the completion of a run, the marking and signaling must be completed and the target available to run in not more than 12 seconds, and the athlete must be ready for the target to be released in not more than 18 seconds;

i) In 10m MATCH firing, following the completion of a run, the signaling and target changing must be completed and the target available to run in not more than 18 seconds, and the athlete must be ready for the target to be released in not more than 20 seconds;

j) The Range Officer and the Jury Members must control carefully the 18 and 20 second timings and immediately penalize an athlete who does not comply with this rule;

k) When the athlete shoots and the shot is not on the target and he later claims that he was not ready when the target started it will be recorded as a miss and he will not be permitted to re-shoot;

l) The timing for the 18 second (50m) and 20 second (10m) time limits begins when the target disappears at the end of each run. The timing stops when the athlete is in the ready position;

m) The Jury must verify the correct timing of the targets during the competition; and

n) If the target is started from the wrong side or tail first, the run must be cancelled and repeated, even if the athlete has fired.

10.7.4.1 In case anything should occur that might be dangerous, disturb the athlete, or otherwise interfere with the competition, the Range Officer must stop the shooting with the command **"STOP."** Should the athlete fire at the moment of the command, he is entitled to have the run cancelled if he requests it.

10.7.4.2 If a series is interrupted for more than 5 minutes or the athlete is moved to another firing point, he may ask for 2 additional sighting shots (4 sighting shots in the mixed runs event). In such a case the Range Officer must announce **"SIGHTING SHOTS"** and the score keepers must be informed. These sighting shots must begin from the same side from which the series is to be continued after the interruption. If no sighting shots are requested, the series resumes where it was interrupted.

10.7.4.3 If an athlete should be unable to fire during a run, a miss must be scored, unless the Rules that entitle the athlete to a re-shoot apply.

CamScanner

10.7.4.4 If the Range Officer neglects to stop the shooting when the respective Rules apply, the athlete may raise his arm and call **"STOP"** provided he has not caused the situation himself. The Range Officer must stop the shooting at once. If the Range Officer finds the action of the athlete justified, he may continue shooting after a check of the situation according to Rules respectively. If the athlete is not justified, the Range Officer must give the command to repeat the run and the athlete must be penalized by deducting two (2) points from the value of that shot.

10.7.4.5 **Misses**

a) Every shot prior to the appearance of the competition target must be scored as a miss;

b) The target will be started without a repeated shot and the miss marked as "Z" on the target, on the score card and on an incident report;

c) Hits **outside the scoring rings** must be scored as zero(es) and recorded as "X" on the target;

d) If the athlete **does not shoot**, the run is scored as zero and recorded as "-" on the target;

e) Shots not hitting the target are scored as zero(es) and recorded as "Z" on the target; and

f) Skid shots and ricochets must be scored as zero(es).

10.7.4.6 **Misses and Penalties in 10m Events:**

a) The athlete must not discharge propellant gas from his rifle. For the first such offence, two (2) points will be deducted **(Green Card)** from the score of the next competition shot. For the second offence, the athlete must be disqualified **(Red Card)** from further competition;

b) Any **release of the propelling charge**, after his first competition target is in place, without a hit on the target will be scored as a miss; and

c) It is the responsibility of the athlete to ensure his air or gas rifle is fully charged with propellant air or gas prior to commencing the competition. If during the competition he has insufficient propellant air or gas to continue, he will be allowed a maximum of five (5) minutes to renew the supply. He may then continue the series but without any additional sighting shots.

CamScanner

10.8 MEDAL MATCH RULES

10.8.1 A **10m Running Target Medal Match** may be conducted as the second phase in the 10m Running Target Men, Women, Men Junior or Women Junior events.

10.8.2 The full 10m Running Target Men, Women, Men Junior or Women Junior course of fire must be completed as a Qualification for a Medal Match.

10.8.3 The four (4) highest scoring athletes in the Qualification advance to the Medal Match. Their start position in the Medal Match is determined by their rank in the Qualification.

10.8.4 Ties for the second and fourth place in the Qualification will be broken according to shoot-off rules.

10.8.5 All qualifiers for the Medal Match start at zero (0). No Qualification scores carry forward into the Medal Match.

10.8.6 Medal Match qualifiers must report ready to shoot on the range 10 minutes before the start time.

10.8.7 In the Medal Match, the first place athlete in the Qualification will compete against the fourth place athlete; the second place athlete in the Qualification will compete against the third place athlete.

10.8.8 An introduction of the athletes must be made.

10.8.9 The Medal Match will be conducted on either two (2) or four (4) ranges.

10.8.10 If there are only two (2) ranges, the first relay will be held with the athletes ranked first and fourth.

10.8.11 If there are four (4) ranges, the athletes ranked first and fourth are on adjacent ranges and second and third are on the other ranges.

10.8.12 The preparation time is one (1) minute followed by two (2) sighting shots, one left and one right (fast runs). The first sighting shot is on command.

10.8.13 All competition shots are on command in fast runs (2.5 seconds).

10.8.14 Scoring is in decimals. The athlete with the highest score in each match on each run receives one point. If there is a tie between a pair, no athlete receives a point.

10.8.15 The athlete who receives six (6) points or more with a difference of two (2) points is the winner of the match.

10.8.16 The losers of the two (2) semi-final matches will compete for bronze medal in the same way as above

10.8.17 The winners of the semi-final matches will compete for gold or silver medals in the same way as above.

CamScanner

10.9 INFRINGEMENTS AND DISCIPLINARY RULES

10.9.1 The athlete must not exceed the preparation time of two (2) minutes without justification, or wait longer than 60 seconds after the conclusion of sighting shots to begin competition shots. After 30 additional seconds, the target must be started and the result counted whether the athlete is in the shooting position or not.

10.9.2 If an athlete does not report when he is due to start the competition the Range Officer must call his name out loud three (3) times within one (1) minute.
If the athlete fails to appear, he must have a new shooting time set by the competition officials and two (2) points must be deducted from his total score.
If, however, the Jury is convinced that the reason the athlete was late was beyond his control, no penalty will be enforced.

10.9.3 An athlete who violates the Rules concerning the **READY** or shooting position must be given a **Warning (Yellow Card)** after the first violation. On the second occurrence a two (2) point **DEDUCTION (Green Card)** will be given. Any subsequent violation must result in **DISQUALIFICATION (Red Card).**

CamScanner

10.10 MALFUNCTIONS

10.10.1 If the athlete has a malfunction with his rifle or ammunition in the Qualification round, the rifle must be placed on the bench or table without further touching it. The Range Officer must be called and shown the malfunction. The Range Officer must interrupt the series of target runs and start a timer to determine the length of the interruption. Malfunctions in Medal Matches may not be claimed.

10.10.2 If the Range Officer determines, after examining the rifle and ammunition, that the malfunction was not caused by the athlete, the run may be repeated.

10.10.3 **The athlete must not be considered at fault if:**

a) The rifle is found in a discharged condition, the chamber is found to contain a cartridge of the same type the athlete is using, the cartridge shows a clear impression of the firing pin and the bullet has not left the barrel; or,

b) The reason for not shooting was caused by a malfunction of the rifle which is not likely to have been caused by the athlete or could not reasonably have been prevented by him.

10.10.4 **The athlete must be considered at fault if:**

a) He or she has not placed the rifle on the bench or table;

b) He or she changed something on the rifle before placing it on the table;

c) The safety catch was not released;

d) The breech was not closed all the way;

e) The rifle was not loaded; or

f) The rifle was loaded with the wrong kind of ammunition.

If the Range Officer determines that the malfunction was caused by the athlete, a miss must be scored.

10.10.5 After the interruption due to a malfunction of the rifle or ammunition, the Range Officer may order the repair of the rifle or a change of ammunition. If the malfunction can be repaired within five (5) minutes, the shooting may be continued. If the repair will take longer than five (5) minutes, the athlete has the right to continue shooting immediately with another rifle or to withdraw to repair his rifle. The Range Officer, with the consent of the Jury, must then decide when the athlete may continue his series, either with the repaired rifle, or with another rifle if a repair is impossible. The series must be continued from the point of interruption.

10.10.6 The Range Officer should continue as if the athlete did not withdraw in order to allow the next athlete to complete his dry firing.

10.10.7 **Faulty Sights**

a) If the athlete discovers during his or her sighting shots that a faulty sight cannot be corrected by adjustment, the Jury can agree to a change of the sight, if a second sight is available;

b) After the change the athlete must receive sighting shots;

c) The athlete must not receive a repeat or additional sighting shots if the examination by the Range Officer shows that the sight mount was not properly tightened; and

CamScanner

d) If the sight becomes loose during a competition series because it was not properly tightened, all shots must be scored.

10.11 FAILURE OF 10m EST SYSTEMS

10.11.1 **If there is a failure of ALL targets on a range** - also applicable to conventional ranges:

a) The actual time must be recorded by the Chief Range Officer and the Jury;

b) All completed MATCH shots fired by each athlete must be counted and recorded. In the event of a range power supply failure, this may involve waiting until power is restored to enable the number of shots registered by the target, not necessarily on the firing point monitor, to be established; and

c) After the failure is rectified and the full range is in operation the athletes will be allowed a one (1) minute preparation time to allow them to resume their positions. The time for recommencing is to be announced over the loudspeaker system at least five (5) minutes beforehand. At the end of the preparation time, the athletes will be allowed four (4) sighting shots (2 left runs; 2 right runs). These sighting shots must begin from the same side from which the series is to be continued after the interruption. After the sighting shots a 30 second pause will be allowed. After the sighting shots and pause the series will resume where it was interrupted.

10.11.2 **In the event of the failure of a Single Target**

If a single target fails to function the athlete will be moved to another target where the same procedure stated in Rule 10.11.1, c will apply.

10.11.3 **Complaint concerning failure to register or display a shot** on the monitor of an electronic scoring target system.

a) The athlete must immediately inform the nearest range official of the failure. The range official must make a written note of the time of the complaint. One or more Jury Members must go to the firing position; and

b) The athlete will be directed to fire one more **MATCH** shot at his target. The athlete must call **"READY."** The procedure of a complaint concerning a failure to register or display a shot stated in the Technical Rules (6.10.8) will apply.

10.12 TIE-BREAKING

10.12.1 **Individual Ties in 50m and 10m Events**

Ties for athletes with perfect scores will not be broken.

10.12.1.1 **Ties for places 1 – 3 and below:**

a) If two (2) or more athletes shoot equal scores, ties for the first three (3) individual places must be decided by a shoot-off to be arranged by the Jury. This shoot-off consists of two (2) sighting shots (one (1) left – one (1) right) and two (2) competition shots (one (1) left – one (1) right) in 2.5 seconds (fast run) on command for all competition shots; and

b) In the event of a further tied score the shoot-off will continue until the tie is broken.

10.12.1.2 **Rules for Shoot-offs**

a) The shoot-off must begin as soon as possible after the protest time has

CamScanner

expired. If the shoot-off is not held at a prearranged time that was publicly announced, the athletes involved must remain in contact with the Chief Range Officer pending an announcement as to time and place;

b) Athletes with tied scores will be allocated adjacent firing points by the drawing of lots under the supervision of the Jury. If more athletes have equal scores, the firing sequence will also be determined by the drawing of lots. When several athletes are tied for more than one ranking place, the tie for the lowest ranking position will be broken first, followed by the next ranking higher position until all ties are broken;

c) If an athlete fails to appear for a shoot-off, he will be ranked last in this shoot-off. If two (2) or more shoot-off athletes fail to appear they will be ranked according to Rule 10.12.1.3 for Individual Ties ranking from 4th place; and

d) During the shoot-off, malfunctions and other irregularities must be treated according to these Rules, but only one (1) malfunction is allowed during the breaking of the tie and any re-shoot or completion will take place immediately.

10.12.1.3 **Ties for 4th place and lower, if not resolved by any Shoot-off, must be decided as follows:**

a) **10m Events.** Any remaining ties for fourth (4th) place and lower are ranked according to tie-breaking Rule 6.15 (i.e., highest number of inner tens, highest score on the last series, next to the last series, etc.);

b) **For 50m Running Target 30 + 30.** Any remaining ties for fourth (4th) place and lower are ranked according to the highest total of the fast run; and if ties remain by comparing the lowest value shot(s) in the total competition for the tied individuals (the athlete with the lowest value shot(s) is declared the loser); if any ties remain, the athletes must have the same ranking; and

c) **For 50m Running Target Mixed Runs.** Any remaining ties for fourth (4th) place and lower are ranked according to the highest total of the second stage; and if ties remain by comparing the lowest value shot(s) in the total competition for the tied individuals (the athlete with the lowest value shot(s) is declared the loser); if any ties remain, the athletes must have the same ranking.

10.12.2 **Team Ties**

Team Ties in 10m Events / 50m Events

Ties in team events must be decided by totaling the results of all members of a team and applying these Tie-Breaking steps.

a) The highest total number of inner tens;

b) The highest total score on the last series, then the next to the last series etc.; and

c) If any ties remain, total scores will be compared on shot-by-shot basis using inner tens, beginning with the last shot, then the next to the last shot etc.

10.13 TARGET MIXED TEAM

10.13.1 **Disciplines**

10m and 50m Moving Target Mixed Team

10.13.2 **Type of Event**

Mixed Team of two (one man and one woman)

CamScanner

10.13.3 **Rules**

The competition will be organized according to the ISSF Rules and Regulations, if no other way is stated below.

10.13.4 **Number of participants in each team**

A team consist of two (2) athletes from each nation. One man and one woman (juniors or seniors or mixed). A maximum of three (3) teams per Nation is allowed. No mixed nation teams are allowed.

10.13.5 **Number of stages**

Two stages:

- Qualification stage 40 shots mixed runs
- Medal Match

10.13.6 **Position**

The two members of the team shoot at the same range. The man stands on the left side and the woman on the right side. Dry firing from the second member is not permitted.

10.13.7 **Qualification Stage**

10.13.7.1 **Shooting event procedures - Qualification stage**

a) The event will be fired in one series of 8 sighting shots (4 sighting shots for each shooter) and 40 competition shots (mixed runs; 20 runs for each team member).

b) The sighting shots: Both team members alternately; 2 runs each per time, starting with the men (2 runs men, 2 runs women, 2 runs men 2 runs women).

c) The Competition: Both team members alternately; 20 runs for each team member, starting with the men (2 runs men, 2 runs women, 2 runs men, 2 runs women, …).

10.13.7.2 **Ranking in qualification**

The ranking in qualification stage will be the combined results of the two team members. The perfect score in the qualification is 400 points.

10.13.7.3 **Tie in qualification stage**

Rule ISSF 10.8.4 for Medal Match is used. The team decides which athlete shoots the tie breaking shots. The tie will be fired according to the rule 10.12.1.1.

10.13.8 **Medal Match**

The four highest scoring teams in Qualification advance to the Medal Match.

10.13.8.1 **Rules for the Medal Matches**

The Medal Matches will be conducted as per ISSF Rule 10.8, if no other way stated in the rules here below.

10.13.8.2 **Commands for Medal Matches**

Before the sighting shots the team will have one minute preparation time.

Sighting shots:

- **»For the sighting shots load«**

CamScanner

- **»Attention«**
- **»3-2-1 START«**
- **The next sighting shots are up to the Athletes**
- **STOP, end of sighting shots**

Competition:

- **»For the first competition shots load«**
- **»Attention«**
- **»3-2-1 START«**
- **»Attention«**
- **»3-2-1 START«**
- **»The point goes to...«**

For the next competition shots:

- **»LOAD«**
- **»Attention«**
- **»3-2-1 START«**
- **»Attention«**
- **»3-2-1 START«**
- **»The point goes to...«**

10.13.8.3 **Shooting event procedures - Medal Matches and scoring**

a) **Semi-finals**

The teams compete in the Medal Matches in fast runs.

The members of the same team shoot at the same range.

The Medal Matches will be conducted on two ranges.

Four (4) sighting shots (1 left run men, 1 right run woman, 1 left run men and 1 right run women) will be fired.

Both Athletes are loading at the same time.

A command for every competition shot is given.

Scoring is in decimals.

The competition starts with 2 shots (1 left run men and 1 right run women).

The team with the highest total score of the 2 shots receives one point.

If there is a tie between the teams, no team receives a point.

The team who reach six points or more with the difference of two points is winner of the match.

b) **Semi-Final Procedure**

The winner of the semi-finals will compete for the Gold/Silver medal

The losers of the semi-finals will compete for the Bronze medal

c) **Gold/Silver Match and Bronze Match**

CamScanner

The teams compete in the Medal Matches in fast runs.

The members of the same team shoot at the same range.

The Medal Matches will be conducted on two ranges.

Four (4) sighting shots (1 left run men, 1 right run woman, 1 left run men and 1 right run women) will be fired.

Both Athletes are loading at the same time.

A command for every competition shot is given.

Scoring is in decimals.

The competition starts with 2 shots (1 left run men and 1 right run women).

The team with the highest total score of the 2 shots receives one point.

If there is a tie between the teams, no team receives a point.

The team to reach six points or more with the difference of two points is winner of the match.

10.13.9 **Malfunction**

The ISSF rule 10.10 will be followed.

10.13.10 **Penalties**

ISSF Rules 10.7.4

10.13.11 **National identification, dress-code**

The Athletes from each nation must display their National identification on their shooting clothing, as follow:

The name of the country designated by 3 letters as determined by the IOC on their jacket pocket on the side which is turned to the audience.

10.13.12 **Music & audience support**

During the Qualification rounds and the Medal Matches, music must be played.

The Technical Delegate should approve the music programme.

Enthusiastic audience support is encouraged and is recommended during the Medal Matches.

10.13.13 **Irregular cases**

Irregular or disputed matters will be decided by the Jury according to General Technical Rules for each event.

CamScanner

10.14 RUNNING TARGET SPECIFICATION TABLE

Event	Max. weight	Trigger pull	Butt plate	Sights	Barrel weights	Ammunition	MATCH shots
10m Running Target	5.5kg including telescope	Free, No set trigger	Depth: lowest point 200mm Length: max. 150mm Depth/ height of curve maximum 20mm	Any sights, telescope with non-variable maximum four power (tolerance + 0.4 x) magnification	Within a radius of 60mm	4.5mm (.177”)	30 slow runs 30 fast runs
10m Running Target Mixed							40 mixed runs
10m Running Target Mixed Team							40 mixed runs
50m Running Target	5.5kg including telescope	500g, No set trigger		Any sights Length: No restrictions		5.6mm (.22”lr)	30 slow runs 30 fast runs
50m Running Target Mixed							40 shots mixed runs

10.15 DRAWINGS

10m Rifle:	The length of the system/barrel including any extension must not be more than 1000mm.
50m Rifle:	The length of the system measured from the rear of the closed bolt in the discharged position to the foremost end of the system, including any extension, must not exceed 1000mm.

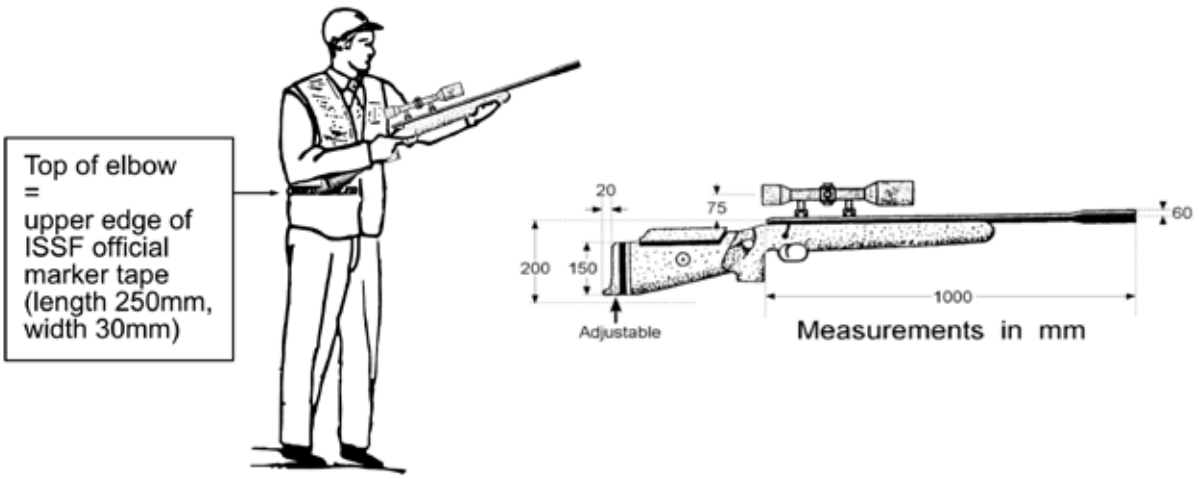

CamScanner

10.16 INDEX

10m – Changing of Targets	10.6.7
10m Rifle – Pellet specification	10.4.4.d
10m Rifle – Length of the System	10.4.4.c
10m Rifle – Standards	10.4.4
10m Rifle – Trigger Pull	10.4.4.a
50m and 10m Events – Programs	10.7.2
50m Rifle – Ammunition	10.4.3.6.d
50m Rifle – Length of the System	10.4.3.6.c
50m Rifle – Standards	10.4.3.6
50m Rifle – Trigger Pull	10.4.3.6.a
Adjusting the Sight – Maximum 60 Seconds	10.7.3.8.e
Appearance of the Target – Within 4 Seconds	10.7.3.8.b
Application of Rules 10m and 50m	10.1.1
Assistant Chief Range Officer – Duties and Functions	10.6.2
Barrel Weights	10.4.3.4
Butt Plate	10.4.2
Cancel and repeat a Run	10.7.3.9
Change of a Sight during the Sighting Series	10.10.7.a
Change of Ammunition	10.10.5
Chief Range Officer – Duties and Functions	10.6.1
Claim not Ready – After Shooting	10.7.3.8.c / k
Clothing Regulations	10.5
Competition Officials	10.6
Competition Rules	10.7.3
Complaint concerning Failure to register or display a Shot (EST)	10.11.3
Complete Dry Firing for the next Athlete	10.10.6
Completion of a Run – 10m; 18 Seconds / 20 Seconds	10.7.3.8.i
Completion of a Run – 50m; 12 Seconds / 18 Seconds	10.7.3.8.h
Continue a Competition after Malfunction	10.10.5
Damaged Sights – Exchange of a Sight	10.4.3.3
Deduction of Points – Not justified Request	10.7.3.12
Deduction of Points – Not reporting at the appointed Time	10.9.2
Deduction of Points / Disqualification – Discharging Propellant Gas	10.7.3.14.a
Delaying calling ‘Ready’ Unnecessarily - Penalties	10.7.3.8.d
Discharging Propellant Gas during the 10m Competition	10.7.3.14.b
Disturbance of the Athlete	10.7.3.9

CamScanner

Drawings – 10m and 50m Rifles	10.15
Dry Fire – Before the Competition	10.7.3.2
Dry Firing – A full Series	10.7.3.2
Dry Firing – Sequence of Athletes	10.7.3.4
Events conducted in one / two Day(s)	10.7.2.4
Exceeding of Preparation Time	10.9.1
Exchange of Rifle, Sight, Weight, Trigger	10.4.3.5
Exchange of the Rifle Sight	10.4.3.3
Extra Shot – Directed to Fire	10.11.3.b
Failure of 10m Electronic Scoring Target Systems (EST)	10.11
Failure of a Single Target	10.11.2
Failure of all Targets on a Range	10.11.1
Fault of an Athlete - Malfunction	10.10.4
Faulty Sights	10.10.7
Firing Procedures	10.7.3.8
General Rules	10.1
General Standards for 50m and 10m Rifles	10.4
General Standards for 50m and 10m Rifles – Table	10.14
Hits outside the Scoring Rings – Recording / Scoring	10.7.3.13.c
Indication of Shots – Monitors etc.	10.7.3.6
Individual Tie – Perfect Score	10.12.1
Individual Ties for the first 3 Places	10.12.1.1
Inform the Range Officer of the Failure to register or display a Shot	10.11.3.a
Infringements and Disciplinary Rules	10.9
Insufficient Air or Gas	10.7.3.14.c
Interruption of Series more than 5 Minutes – Additional Sighting	10.7.2.2
Knowledge of the Rules	10.1.2
Left-handed Athlete / Right-handed Athlete	10.1.3
Line Officer – Duties and Functions	10.6.5
Loose Sight	10.10.7.d
Malfunction – Caused by the Athlete	10.10.4
Malfunction – Not caused by the Athlete	10.10.3.a
Malfunction – Athlete not considered at fault	10.10.3
Malfunctions	10.10
Marker Tape	10.5.1/ 10.5.1.1
Medal Match Rules	10.8
Men’s Events / Women’s Events	10.1.4
Misses	10.7.3.13

CamScanner

Misses and Penalties in 10m Events	10.7.3.14
Mixed Runs – 20 / 20	10.7.2.2
Mixed Team	10.7.2.3 / 10.13
Not fired Shots – Recording / Scoring	10.7.3.13.d
Not fired Shots – Unable to fire	10.7.3.11
Not fully charged Air or Gas Rifle	10.7.3.14.c
Not hitting the Target – Recording / Scoring	10.7.3.13.e
Not properly tightened Sight	10.10.7.d
Not reporting at the appointed Time – Late Athlete	10.9.2
Number of Shots per Run	10.7.3.5
One Rifle per Event	10.4.3.5
Pit Officer – Duties and Functions	10.6.6
Pre and Post Competition Equipment Checks	10.4.5
Preparation Time – 2 Minutes	10.7.3.7
Range and Target Standards	10.3
Range Officer – Duties and Functions	10.6.3
READY before Sighting Shots	10.7.3.8.a
READY before the first Competition Shot	10.7.3.8.a
Ready Position	10.7.1.1
Ready Position – Incorrect Position	10.7.1.2
Refusing of a Target – Appearance before Ready	10.7.3.8.c
Register Keeper – Duties and Functions	10.6.4
Release of the Propelling Charge during the 10m Competition	10.7.3.14.b
Repairing a Rifle	10.10.5
Ricochets – Recording / Scoring	10.7.3.13.f
Right-handed Athlete / Left-handed Athlete	10.1.3
Run – Definition	10.7.1.3
Safety	10.2
Scope of Rules	10.1.1
Shooting before Ready	10.7.3.8.c
Shooting Events Procedures and Competition Rules	10.7
Shooting Position	10.7.1.2 / 10.14
Shooting Position – Incorrect Position	10.7.1.2
Shoot-off Rules	10.12.1.2
Shot Holes 50m – Patching of Competition Shots	10.6.6.j
Shots prior to Appearance of the Target – Recording / Scoring	10.7.3.13.a
Showing of Shot Holes to the Athlete – At least 4 Seconds	10.7.3.8.f
Sighting Shots 50m – Patching	10.6.6.h

CamScanner

Sights	10.4.3
Sights – Faulty Sights	10.10.7
Sights 10m Rifle	10.4.3.2
Sights 50m Rifle	10.4.3.1
Skid Shots – Recording / Scoring	10.7.3.13.f
Slow Runs / Fast Runs – 20 / 20	10.7.2.2
Slow Runs / Fast Runs – 30 / 30	10.7.2.1
Specification Table	10.14
Standards for 10m & 50m Rifles	10.4
Start of a Series – Direction of Runs – From right to left	10.7.3.5
Start of Target from the Wrong Side or Tail first	10.7.3.8
Stop Shooting – On Athlete's Request – Justified	10.7.3.12
Stop Shooting – On Athlete's Request – Not justified Stop Shooting by the Range Officer – Target Mixed Team	10.7.3.12
Cancel a Run on Request	10.7.3.9 / 10.13
Team Ties	10.12.2
Technical Officers – Electronic Scoring Targets	10.6.8
Technical Problems with a Rifle / Ammunition	10.10.1
Test Athlete	10.7.3.3
Tie-Breaking	10.12
Ties from the 4th Place	10.12.1.3
Ties from the 4th Place – 10m Events	10.12.1.3.a
Ties from the 4th Place – 50m Events 30 / 30	10.12.1.3. b, c
Ties from the 4th Place – 50m Mixed	10.12.1.3. b, c
Time Cycle – Constant Rhythm	10.7.3.8.g
Time Cycle – Controlled by Range Officials and Jury Members	10.7.3.8.j
Timing Begins / Ends – 50m: 18 Seconds / 10m: 20 Seconds	10.7.3.8.l
Verifying of Timing by the Jury during Competition	10.7.3.8.m
Weight of Rifle	10.4.1 / 10.13
Women's Events / Men's Events	10.1.4

CamScanner

11
TARGET SPRINT RULES

FOR

10m Air Rifle

CamScanner

11.1 GENERAL 481
11.2 SAFETY 481
11.3 RANGE AND TARGET STANDARDS 483
11.4 RIFLES AND AMMUNITION 487
11.5 CLOTHING REGULATIONS 490
11.6 COMPETITION JURY DUTIES AND FUNCTIONS 491
11.7 ORGANIZING COMMITTEE COMPETITION OFFICIALS 491
11.8 SHOOTING EVENT PROCEDURES AND COMPETITION RULES 491
11.9 ATHLETES CATEGORIES 494
11.10 CHAMPIONSHIP ADMINISTRATION 496
11.11 RULES OF CONDUCT FOR ATHLETES AND OFFICIALS 497
11.12 MALFUNCTIONS 497
11.13 SCORING AND RESULTS PROCEDURES 497
11.14 WORLD RECORDS 497
11.15 TIE-BREAKING 497
11.16 PROTESTS AND APPEALS 498
11.17 ENTRY FEE 498
11.18 IRREGULAR OR DISPUTED MATTERS 498
11.19 FORMS 498
11.20 THE ISSF DRESS CODE 498
11.21 INDEX 499

NOTE:

Where figures and tables contain specific information, these have the same authority as the numbered rules.

CamScanner

11.1 GENERAL

11.1.1 These Rules are part of the ISSF Technical Rules and apply to all Target Sprint events. If there is any ambiguity or inconsistency between these Rules and the ISSF Technical Rules these Rules take precedence and shall apply.

11.1.2 All athletes, team leaders and officials must be familiar with the ISSF Rules and must ensure that these Rules are enforced. It is the responsibility of each athlete to comply with the Rules.

11.1.3 When a Rule refers to a right-handed athlete, the reverse of that rule refers to left-handed athletes.

11.1.4 Unless a Rule applies specifically to a man's or a woman's event, it must apply uniformly to both men's and women's events.

11.2 SAFETY

11.2.1 SAFETY IS OF PARAMOUNT IMPORTANCE

11.2.2 Gun Handling Rules

11.2.2.1 To ensure safety, all guns must always be handled with maximum care. Guns must not be removed from the firing line during training or competition except with the permission of a Range Officer.

11.2.2.2 Safety flags or muzzle covers constructed of fluorescent orange, red or a similar bright material must always be inserted in all rifles or placed over the muzzle as appropriate, except when their removal is authorized by these Rules. To demonstrate that air rifles are unloaded, safety flags (safety lines) must be long enough to extend through the full length of the barrel of rifles that do not use single magazines. Non-magazine loading rifles must also have their breech open to demonstrate that they are unloaded.

a) Safety flags or muzzle covers must be inserted in all rifles or placed over the muzzle as appropriate in all rifles that are not in gun cases or boxes before athletes are called to the line or when leaving a firing point except when the athlete leaves the firing point during training or during the competition.

b) If a safety flag or muzzle cover is not used as required by this Rule, a Jury Member must give a WARNING with instructions to insert a safety flag or fit a muzzle cover to the rifle; and

c) If a Jury Member confirms that an athlete refuses to use a safety flag or muzzle cover as required by this rule and after being warned, the athlete must be disqualified (DSQ).

11.2.2.3 While athletes are on their firing points, their rifles must, when not in the rifle rack, always be pointed in safe directions. The breech must not be closed until the gun is pointing down range in a safe direction towards the target area and for single magazine loading rifles a pellet may not be inserted into the magazine and the magazine must not be fully inserted and engaged until the gun is pointing down range in a safe direction.

11.2.2.4 When all training and competition shooting stages and running stages are complete and the athletes leave the firing point with their rifles the rifle must be unloaded with actions (bolt or locking mechanism) open and safety flag or muzzle cover used. The Range Officer must verify that there is no pellet in the rifle chamber, barrel, or magazine and that a safety flag or muzzle cover is used.

CamScanner

11.2.2.5 When placing the rifle into the rifle rack on the firing point during training and competition the actions (bolt or locking mechanism) must be fully open by opening the cocking lever, and the magazine may remain inserted but must not be fully inserted and engaged.

11.2.2.6 If the athlete boxes or cases his gun or removes it from the firing point without having it checked by a Range officer, he may be disqualified if the Jury determines that a safety violation is involved.

11.2.2.7 When any personnel are forward of the firing line, handling guns is not permitted, and safety flags or muzzle covers must be inserted or fitted as appropriate. If it is necessary for a Jury member, Range Officer or Technical Officer to go forward of the firing line during training, competition, or a Final this must be authorized and controlled by the Chief Range Officer (CRO) and any movement forward of the line may only be permitted after all rifle safety flags or muzzle covers are fitted.

11.2.2.8 In the range, when rifles are not on the firing points, they must always be in a rifle rack designated for the holding of rifles by the CRO or boxed in their cases, unless otherwise authorized by a Range Officer.

11.2.3 Range Commands

11.2.3.1 Chief Range Officers, or other appropriate range officials, are responsible for giving the commands “5 Minutes Preparation Time Start “, “5 Minutes Preparation Time Stop”, “Athletes Ready”, “Athletes Set”, “Start” and other necessary commands. The command “Start” may also be by the sounding of a whistle or firing of a starter pistol. Range officers must ensure that all commands are obeyed and that rifles are handled safely.

11.2.3.2 Only single shot magazines may be used.

11.2.3.3 A rifle is considered loaded when a pellet touches the chamber or breech, or for single shot magazine rifles when a loaded magazine is fully (not partially) inserted and engaged in the rifle.

11.2.3.4 When the command or signal **“STOP”** is given, shooting must stop immediately. When the command **“UNLOAD”** is given, all athletes must unload their rifle and magazines, and make safe (to unload air rifles ask the Range Officer for permission). Shooting may only resume when the command **“START”** is given again.

11.2.4 Additional Safety Requirements

11.2.4.1 **Dry Firing** is the release of the cocked trigger mechanism of an air or gas rifle fitted with a device which enables the trigger to be operated without releasing the propelling charge (air or gas). Dry firing and aiming exercises are permitted only on the firing line or in a designated area in accordance with these Rules.

11.2.4.2 It is the athlete’s responsibility to ensure that any air or CO2 cylinder is still within its validity date. This may be checked by Equipment Control.

11.2.5 Hearing Protection

Athletes may wear ear plugs, ear muffs, or similar ear protection. Competition officials may wear sound-enhancing hearing protection devices or other communication devices on the FOP. Hearing impaired athletes may wear sound-enhancing devices with the approval of the Jury.

CamScanner

11.2.6 **Eye Protection**

All athletes are urged to wear shatterproof shooting glasses or similar eye protection while shooting.

11.3 RANGE AND TARGET STANDARDS

11.3.1 Ranges and other Facilities

11.3.1.1 Requirements for minimum range sizes for ISSF Championships are as set out in these Rules.

11.3.1.2 Continental Confederations must establish minimum range requirements for Continental Championships.

11.3.1.3 The ISSF recommends that all new ranges be accessible to disabled persons. Existing ranges should be adapted to make them accessible to disabled persons.

11.3.1.4 It is recommended that ranges used for World Championships be completed at least one (1) year in advance.

11.3.1.5 The Chief of the Jury is responsible for examining the ranges and other facilities to ensure that they comply with ISSF Rules and are prepared for the conduct of the Championship. The Chief of the Jury should use the Checklist to examine the organization, ranges, and facilities (available from ISSF Headquarters).

11.3.1.6 A Technical Delegate may approve small deviations from specifications in ISSF Rules that do not conflict with the intent and spirit of ISSF Rules, except that no deviations in shooting distances or target specifications are allowed.

11.3.2 General and Administrative Facilities

The following facilities must be provided at or near the shooting ranges:

a) Athlete collection area;

b) Athlete rest areas;

c) Changing rooms for athletes near the Finals and Qualification Ranges;

d) At least one meeting room for use by ISSF officials and Juries;

e) At least one room for Organizing Committee offices and administration;

f) A control room for RTS (results, timing and scoring) and provide adequate storage for RTS operations;

g) Separate Dry firing and athlete warm-up areas;

h) All 10m Ranges must have a supply of compressed air that is accessible to athletes and coaches; compressed air tanks must be securely fastened to a wall or other structure so they cannot be tipped over;

i) One Main Scoreboard for posting official results and notices.

j) An armoury for secure arms storage;

k) An equipment control testing area;

l) A gunsmith shop with suitable work benches and vices;

m) Free facilities for firearms and equipment manufacturers to service their products;

CamScanner

n) An area for commercial displays should be available, a fee may be charged for such displays;

o) A restaurant or facilities for food service and refreshments;

p) Adequate toilet facilities;

q) Wireless internet and email communication services; separate internet services must be provided for operations (results services, ISSF TV, administration) and for the public;

r) A Victory Ceremony area or a portable Victory Ceremony podium and backdrop that can be set up on or adjacent to the Finals Range;

s) Facilities for media, radio and television representatives;

t) Facilities for Anti-Doping testing, with toilets;

u) Appropriate medical facilities; and

v) Parking facilities.

11.3.3 **Venue Design**

11.3.3.1 Target Sprint events are organized on a venue that has a combination of a running course and an air rifle range. The number of firing points on the air rifle range may vary from a recommended minimum of 10 to a maximum up to 12.

11.3.3.2 For indoor and outdoor Target Sprint events, the running course should be at least 400 metres long of either 1 x 400 metre lap or 2 x 200 metre laps before each shooting stage and after the last shooting stage to the finish).

11.3.3.3 **Start and Finish Zones**

11.3.3.4 Start and finish zones for the running course must be at least five (5) metres wide. There must be an open space of at least three (3) metres on the sides of the finish line (outside the running course) that is free of any obstacles. There must be an open space of ten (10) to fifteen (15) metres beyond (past) the finish line that is free of any obstacles where runners may safely finish. If possible, the start area shall be located on the side closest the range and the finish area on the side opposite the start area. Organizers should organize the start/finish area in such a way that all athletes could start side by side from a single line and there is no turning point of the course within ten (10) metres of the start/finish line.

11.3.3.5 **The Running Course**

The running course should be at least three (3) metres wide. Spectators and Media should where possible see the athletes all the time. Each segment of the course should be laid out so that it forms a loop starting from near the shooting range and returning to near the shooting range. Each segment can be run as often as necessary to complete the competition. The course must be free of any obstacles that would prevent athletes from running safely.

11.3.3.6 **The Running Distance**

11.3.3.7 The running track must be at least four hundred (400) metres per running stage including the firing range zone and the maximum total distance per running stage including the firing range zone is five hundred (500) metres.

11.3.3.8 Each segment of the racecourse must be clearly marked in such a way that athletes will not be in doubt as to the correct running route to follow.

11.3.3.9 **Air Rifle Shooting Range**

CamScanner

11.3.3.10 The shooting range should be set up near the start/finish area of the running course.The range should have a firing line with designated firing points, a line of targets that correspond to the firing points, small rifle racks for each firing position and a safety barrier on the sides and rear of the range. A ready area / rifle storage area must be next to the shooting range with rifle racks to store the rifles of all athletes during the competition. Spectators and Media should, where possible, see the athletes all the time. The target area and firing points for outdoor competitions must remain uncovered from above and allowed to receive natural light or lighting consistent with the running track area. The shooting range firing points must be on flat, level ground. Safety features for the range must comply with current national federation or government guidelines for air rifle ranges. The range should, if possible, be orientated so that the firing direction is to the north in the Northern Hemisphere and to the south in the Southern Hemisphere. The background provided by the safety barrier (behind the targets) must be a non-reflecting, light even neutral colour to a height of not less than one (1) metre above the top of the falling target disc targets over the entire width of the rear of the shooting range.

11.3.3.11 **Shooting Range Firing Line and Firing Points**

11.3.3.12 The shooting range must have a firing line that is divided into firing points. The firing line must be clearly marked (with a red tape or line minimum of ten (10) centimetres wide) at the front of the firing points. The athlete's foot must not be placed on or in front of the firing line.

11.3.3.13 The firing point is the designated area where an individual athlete fires at his/her target.Each firing point should be between one and a half (1.50) and two (2.00) metres wide. The firing line is divided into firing points that are clearly marked and designated with firing point numbers numbered in ascending order from right to left as viewed from the firing point when facing the targets. Each athlete in a competition relay is assigned to shoot on a specific firing point. The number of athletes in a relay must not exceed the number of firing points.

11.3.3.14 A chair or stool is to be provided behind each firing point for a RO or range official to observe the number of shots taken by each athlete and to record the number of target discs not hit in each shooting series of a competition and to record the completion of each running stage as completed by each athlete.

11.3.3.15 The athlete is not permitted to have anything on their firing point during Preparation Time and the competition other than their rifle, safety flag/muzzle cover and pellets which may be in a pellet holder/dispenser/tin.

11.3.4 **General Target Requirements**

11.3.4.1 All targets used in ISSF Championships must comply with the falling target disc dimensions or other specifications given in these Rules.

11.3.4.2 Each athlete fires on target mechanisms the front face of which are placed at a distance of ten (10) metres from the firing line.The shooting distance must be as exact as possible, subject to the plus or minus 0.05 metres allowable variation. Each target mechanism has five (5) falling target discs that are thirty-five (35) millimetres in diameter with a center-to-center distance between targets of seventy-eight to eighty-five (78-85) millimetres. The target discs must be painted black and be mounted in a mechanism that is painted white. The target discs must fall or otherwise provide a visible hit signal to shooters, coaches, range officials and spectators when hit. Only target discs that fall and provide such a visible hit signal shall count as hits. The target mechanism must be designed so that the target discs can be electronically or mechanically

CamScanner

reset from the firing line by the CRO or RO after each athlete completes a shooting stage. Only targets that comply with ISSF requirements may be used.

11.3.4.3 **Targets**

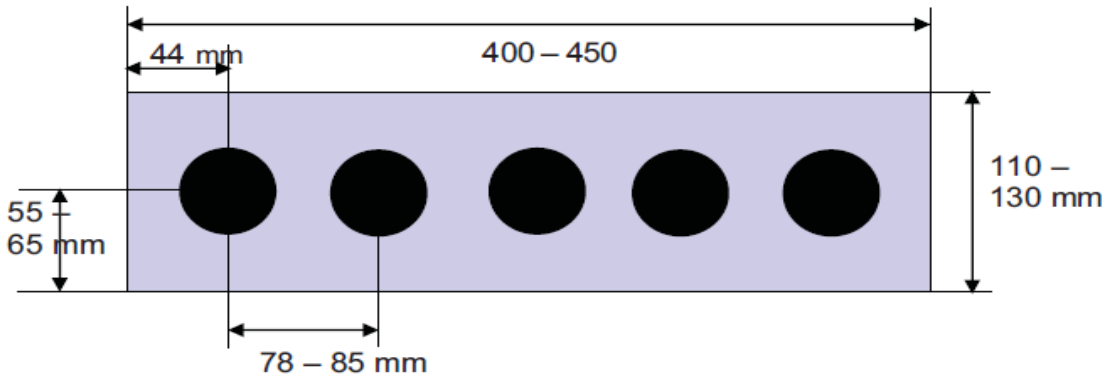

11.3.4.4 **Target and Hit Zone**

- Target zone thirty-five (35) mm.
- Hit zone thirty-five (35) mm.

11.3.4.5 **Height of Competition Targets**

11.3.4.6 All competition targets must be placed at a uniform height relative to the level of the firing station of 1.40 metres ± 0.05 metres.

11.3.4.7 **Rifle Racks**

11.3.4.8 Small Rifle racks must be available for each athlete on the firing points (to hold minimum three (3) rifles for team competitions and two (2) rifles for pairs competitions) and large rifle racks must be available in a specified rifle storage area which has to be placed next to the shooting range. The rifle racks must be positioned in the middle between each set of targets on the firing points so that competitor must cover an equal distance from the rack to/from his/her firing point. It is not allowed for the athletes to move the rifle racks.

11.3.4.9 Rifle racks may be made of wood and be designed so that rifles will not fall out accidentally. The recesses to accept the rifles must be at least thirty-five (35) mm wide and the distances between the rifles should not be less than fifteen (15) cm. The racks must display the firing point number to indicate to the athletes and range officials where the rifle is to be deposited.

11.3.4.10 **Loading Stand**

11.3.4.11 Loading stands approximately one (1.0) metre in height must be available at each firing point.Loading stands must have platforms (ten (10) cm x ten (10) cm) on which athletes may place their air rifle pellets for loading during shooting stages.

11.3.5 **Indoor Range Light Requirements (Lux)**

11.3.5.1 Qualification and Finals ranges must have a minimum general lighting of five hundred (500) lux and a minimum of one thousand five hundred (1500) lux on the firing line.

CamScanner

11.3.5.2 All indoor ranges must have artificial illumination providing the necessary amount of light without glare or distracting shadows on the targets or firing points. The background area behind the targets must be a non-reflecting, light even neutral colour to a height of not less than one (1) metre above the top of the falling target disc targets over the entire width of the rear of the shooting range.

11.3.5.3 Measuring target illumination on targets with internal lighting must be done by measuring reflected light from the target face and in accordance with rule 6.4.14.2 of the ISSF General Technical Rules.

11.4 RIFLES AND AMMUNITION

11.4.1 Standards for All Rifles

11.4.1.1 Single Loader Rifles. Only single shot rifles that must be manually loaded before each shot may be used.

11.4.1.2 **One Rifle Per Event**. Only one (1) rifle is allowed to be used in the Qualification and Finals Rounds of one (1) event. The action, barrel and stock may not be exchanged, except that a detachable butt-stock may be exchanged. Accessories attached to the action, barrel or stock may be exchanged. A rifle that becomes disabled may be replaced according to rule 6.13.3 of the ISSF General Technical Rules if the Jury approves.

11.4.1.3 **Movement or Oscillation Reduction Systems**. Any device, mechanism or system that actively reduces, slows, or minimizes rifle oscillations or movements before the shot is released is prohibited.

11.4.1.4 **Pistol Grips**. The pistol grip on the rifle for the right hand must be constructed in such a way that it does not rest on the left arm.

11.4.1.5 **Barrels** and extension tubes must not be perforated in any way. Compensators and muzzle brakes on rifles are prohibited. Any construction or device inside the barrel or tubes, other than rifling and chambering for the pellet, is prohibited.

11.4.1.6 **Sights**

a) The front or rear sights may have light or tinted lenses or a polarizing filter, but the sights may not have any system of lenses.

b) No Light enhancing system, optical sight, optical system or telescope may be attached to the rifle.

c) A single corrective lens may be attached to the rear sight only; or the athlete may wear corrective or tinted lenses.

d) Any aiming device programmed to activate the firing mechanism is prohibited.

e) A blinder may be attached to the rifle or to the rear sight. The blinder size/ shape is not restricted. A prism or mirror device may be used when shooting from the right shoulder while aiming with the left eye, providing it does not have a magnifying lens system. It must not be used when shooting from the right shoulder when using the right eye.

11.4.1.7 **Pellet Holder** devices are allowed to be fixed to the rifle with pellets held in place before and during training and competitions provided the removal of pellets from the pellet holder for each loading sequence is carried out manually.

CamScanner

11.4.1.8 **Electronic triggers are allowed providing:**

a) All components are firmly attached to and contained within the action or stock of the rifle so that the battery and wires are not visible externally.

b) The trigger is operated by the right hand of a right-handed or the left hand of a left-handed athlete.

c) All components are included when the rifle is submitted for inspection by Equipment Control.

d) The rifle with all components installed complies with the rules governing dimensions and weight for that event.

11.4.2 **Rifle Specifications**

11.4.2.1 Only 4.5 mm (.177") air rifles firing lead pellets propelled by CO2 gas or compressed air may be used with a maximum muzzle velocity below 175 m/s.

11.4.2.2 Rifles may have:

- An adjustable aperture, non-optical rear sight.
- A non-optical front sight with interchangeable inserts.
- Single loading uses only

  (no multiple magazine use, only single magazines are allowed)
- Dimensions that must comply with dimensions in the chart below
- No restriction on size for the diopter.

11.4.3 **Air Rifle-dimensions chart**

Note: All letter references A – O are to the locations on the rifle shown on the rifle measurement Diagrams at rule 7.4.4.1of the ISSF Rifle Rules.

A	Length of front sight tunnel	60mm
B	Diameter of front sight tunnel	25mm
C	Distance from centre of the front sight ring or top of post to centre of bore either directly above or offset.	80mm
D	Depth of fore-end	140mm
E	Lowest point of pistol grip	160mm
F	Not applicable	
G	Not applicable	
H	Heel to toe length of butt-plate	175mm
I	Maximum thickness (breadth) of fore-end (excluding ammunition and/ or magazine holder)	60mm
J1	Maximum distance (horizontal) of cheek piece from the centre-line of the barrel	40mm
J2	Not applicable	
K	Offset of the butt-plate from the left or right edge of the butt-plate to butt-stock centre.	30mm
L	Trigger weight	Free

CamScanner

M	Not applicable	
N	The front sight must not extend beyond the apparent muzzle of the rifle (in addition to the front sight excluded extensions include barrel weights, sight extensions, sight risers or any other extension)	
O1	Air Rifle. Total length of the Air Rifle system	850mm
O2	Not applicable	

11.4.3.1 The butt-plate may be adjustable up or down. The butt-plate may be offset to the right or left of the butt-stock center and/or the butt-plate may be turned on its vertical axis. If a multi-part butt-plate is used ALL parts of the butt-plate must be offset or turned in the same direction from the butt-stock center. No part of the butt-plate (outer edges) may extend more than 30mm from the butt stock centerline. The butt-stock center line is a vertical line that is perpendicular to the centerline of the bore as the diagram at rule 7.4.4.1 of the ISSF Rifle rules.

11.4.3.2 A thumb hole, thumb rest, heel rest and spirit level are prohibited. A heel rest is any protrusion or extension on the front or side of the pistol grip designed to prevent the hand from slipping.

11.4.3.3 Material that gives increased grip may not be added to the fore-end, pistol grip or lower part of the stock.

11.4.3.4 **Weights**

a) Barrel weights within a radius of thirty (30) mm from the center of the barrel are permitted. Barrel weights may be moved along the barrel.

b) Any weights projecting downward or outward (laterally) from the butt-stock are prohibited.

c) Any weights projecting forwards or laterally from the lower part of the butt-plate are prohibited.

d) Taping of any kind cannot be used to attach any weights to the rifle.

11.4.3.5 **Palm Rests**

A palm rest is any removable attachment or extension below the fore-end that aids the support of the rifle by the forward hand. Such extensions must not extend more than 120mm below the centerline of the barrel.

11.4.3.6 **Pistol Grips**

No part of the pistol grip on a rifle may be extended or constructed in any way that would allow it to touch or support the back of the hand or the wrist.

11.4.3.7 **Ammunition**

Rifle	Calibre	Other specifications
10m	4.5mm (.177”)	Projectiles of any shape made of lead or other soft material are permitted.

CamScanner

11.5 CLOTHING REGULATIONS

See General Technical Rules for general standards regarding clothing and the testing of clothing (Rule 6.7 – 6.7.6.1 applies).

11.5.1 General Standards for clothing

11.5.1.1 Ordinary athletic type socks, shoes, shorts, shirts, vests, etc. may be worn in any event appropriate to the venue conditions. No special shooting clothing is allowed. Shooting gloves are allowed subject to rule 11.5.1.3. The use of kinesio tape or similar strapping should be allowed on the athlete's legs only, but not on the arms or any other part of the body where additional support may be gained.

11.5.1.2 Athletes are responsible for ensuring that all items of clothing used by them comply with these Rules. The Equipment Control section must be open to make voluntary inspections of athletes clothing from the Official Training day until the last day of competition and athletes are encouraged to bring their rifle and clothing items for Equipment Control check before the competitions to be sure they comply with these Rules. In preparing clothing for competitions, athletes must make allowances for any measurement variations that may occur because of changes in temperature, humidity, or other environment conditions.

11.5.1.3 **Shooting Gloves**

(a) The total thickness must not exceed twelve (12) mm when measuring front and back materials together at any point other than on seams and joints.

(b) The glove must not extend more than fifty (50) mm beyond the wrist measured from the center of the wrist knuckle as Rule 7.5.6.2. Any strap or other closure device at the wrist is prohibited. However, a portion of the wrist may be elasticated to enable the glove to be put on, but it must leave the glove loose around the wrist.

11.5.2 Equipment and Accessories

Competition Equipment

See General Technical Rules for general standards regarding equipment (Rule 6.7 – 6.7.6.1 applies)

Equipment Control Procedures

See General Technical Rules for general standards (Rule 6.7.6.2 applies).

Bib (Start) Numbers and Items Worn by Athletes

See General Technical Rules for general standards (Rule 6.7.7 – 6.7.7.3 applies).

11.5.2.1 **Spotting Telescopes**

The use of telescopes attached or not attached to the rifle to locate shots and judge the wind is not permitted by the athlete at the firing line.

11.5.2.2 **Slings**

The use of slings is not permitted.

11.5.2.3 **Shooting Box or Bag**

The use of a shooting box or bag is not permitted on the firing line.

CamScanner

11.5.2.4 **Visor or Cap**

A cap or visor may be worn, but it must not touch or rest on the rear sight (must be visibly free of the sight) while the athlete is shooting. The cap or visor may extend forward of the athlete's forehead no more than eighty (80) mm and may not be worn in any way that makes it act as a side blinder.

11.5.3 **Post-Competition Testing**

11.5.3.1 Post competition checks must be conducted after Qualification competitions and during the reporting time before Finals according to the procedures specified in the "ISSF Equipment Control Guidelines." The Equipment Control Jury is responsible for supervising the conduct of all post-competition checks. Judges of the same gender as the athletes must be available for clothing and taping checks. Failure of the following specific post-competition checks must result in disqualification (DSQ).

a) Rifle: Competition clothing, underclothing, taping and rifle specifications.

b) Failure to report for a post-competition check after being given written notice to report.

11.5.3.2 If an athlete fails a post-competition check, the chairman of the Equipment Control Jury or one other Equipment Control or Competition Jury Member must confirm that the test was performed correctly and that the athlete is disqualified. The confirmation procedure must include using ISSF calibration testing equipment to confirm that the testing instruments are measuring accurately.

11.5.3.3 Targeted testing (selection of athletes on a non-random basis) may be done when a Jury has credible evidence that an athlete has altered or attempted to alter his rifle, clothing, or equipment.

11.6 COMPETITION JURY DUTIES AND FUNCTIONS

See General Technical Rules for general standards (Rule 6.8 – 6.8.16 applies)

11.7 ORGANIZING COMMITTEE COMPETITION OFFICIALS

See General Technical Rules for general standards (Rule 6.9 – 6.9.4 applies)

11.8 SHOOTING EVENT PROCEDURES AND COMPETITION RULES

11.8.1 **Shooting Positions**

11.8.1.1 **Standing**

a) The athlete must stand free, without any artificial or other support, with both feet on the firing point surface or on the shooting mat behind the firing point line. No part of the athlete's foot must be on or in front of the firing line.

b) The rifle may be held with both hands and the shoulder or the upper arm near the shoulder and the part of the chest immediately adjacent to the right shoulder.

c) The cheek may be placed against the rifle stock.

d) The rifle must not touch the chest beyond the area of the right shoulder.

CamScanner

e) The left upper arm and elbow may be supported on the chest or on the hip. If a belt or buckle is worn the buckle or fastening must not be used to support the left arm or elbow.

f) The rifle must not touch or rest against any other point or object.

g) A hand stop/sling swivel is not allowed in this position.

h) In this position, the use of a sling is prohibited.

11.8.1.2 **Shooting Stages**

Athletes may shoot only on their designated firing point each time they arrive at the range for a shooting stage. Shooting on another target other than the athlete's assigned target will result in disqualification.

11.8.2 **Competition Rules**

11.8.2.1 **Competition Format**

Events should be organized so that all participants complete the following stages:

Stage	Activity	Description
	Athlete Collection	Not less than fifteen (15) minutes before the start of the Preparation Time the athletes must be ready in the designated athlete collection zone for the CRO to brief the athletes of the rules for the event.
	Preparation Time	All qualification and all final events start with a five (5) minutes Preparation Time (for all team and relay competitions they have ten (10) minutes starting on the CROs command having arrived at their firing points for Preparation Time. Sighting shots should be fired from standing position either on a paper target, or upon the request of the athletes, the sighting shots can also be fired on the falling targets. The athlete must communicate the request to the CRO not later than during the Athlete Collection time and the decision should be final.
	Start Line	After or during the Preparation Time the athletes must go to the start line and wait there for the start signal. After the Start:
1	Running	Four hundred (400) m – five hundred (500) m on the designated running course.
2	Shooting	Athletes take rifles from the rifle rack and fire at five (5) falling targets from the standing position. -- > Athletes must continue firing until all targets are hit → or → fire a maximum of 15 shots, to hit all five (5) targets, if after fifteen (15) shots targets are not hit, the athlete will be held by the Chief Range Officer in the Penalty Box for fifteen (15) seconds for each missed target
3	Running	Four hundred (400) m – five hundred (500) m: After shooting, rifles are replaced in the rifle rack and running continues.
4	Shooting	Athletes repeat Stage 2.
5	Running	Four hundred (400) m – five hundred (500) m: After shooting, rifles are replaced in the rifle rack and running continues until the athlete reaches the finish line. The total time from the start to the finish is the final result.

CamScanner

	After Finish	After the race is over and all athletes have crossed the finish line the athlete must remove all his equipment from the shooting line, when instructed by the Chief Range Officer.
		Before and after the race all the rifles must be stored in the rifle storage area near to the shooting range, it is prohibited to store rifles outside the rifle storage area.

11.8.2.2 **Shooting Target Hits**

A hit on the target is scored when the athlete fires at and hits the target disc so that it falls. Only target discs that fall to provide a visible hit signal shall count as hits. Athletes must score hits on all five targets before they can continue running. It is allowed to fire a maximum of fifteen (15) shots to hit all five targets, if after fifteen (15) shots targets are not hit the athlete will wait for fifteen (15) seconds in the penalty box for each missed target.

11.8.2.3 **Running-Shooting-Running Changes**

The athlete does not carry the rifle during the race. The rifle remains in the rifle rack at the firing point while the athlete is running. At the end of each of the first two running stages, athlete's must:

1) approach the shooting range,

2) take their rifles from the rifle racks,

3) take their positions on the firing line,

4) fire sufficient shots to hit all five targets,

5) open the actions fully or for single magazines partially eject the magazine from the fully inserted and engaged position to the inserted only position,

6) and return the rifle to the rifle rack and

7) resume running on the running course.

11.8.2.4 **Rules for a fair competition**

(a) Fair play is mandatory. Fair play is more than playing within the rules of the sport. It is a way of thinking and acting. It is the elimination of cheating, doping, gamesmanship, physical and verbal violence, exploitation.

(b) If through no fault of the athlete a target does not work in a qualification heat, after having a sufficient rest the athlete must be given another target or another starting opportunity. If the athlete suffers a malfunction of their own equipment and the athlete can no longer complete any stage of the qualification heat or final due to the malfunction, then that athlete will not be given another starting opportunity.

11.8.2.5 **Offence/Violation Penalties**

(A) The offences/ violations listed below lead to disqualification:

i. Intentional body contact in the race should be avoided. Pushing, holding or other unfair contact and disability between athletes is prohibited and the offending athlete will receive a red card and be disqualified.

ii. If an athlete starts early, the entire field must be stopped and restarted. The athlete responsible for the early start will first be given a yellow card warning. If

CamScanner

the same athlete causes another false start, they will receive a red card and be disqualified.

iii. If an athlete shoots on targets that are not assigned to their shooting lane, they will receive a red card and be disqualified.

iv. If the athlete fires more shots than the fifteen (15) shots allowed in any shooting stage, they will receive a red card and be disqualified.

v. If the athlete shoots on a shooting lane other than the assigned shooting lane, they will receive a red card and be disqualified.

vi. If the athlete loads and closes the chamber or fully inserts and engages the loaded magazine before leaving the shooting range, they will receive a red card and be disqualified.

vii. If the athlete leaves the firing point without the chamber fully open, they will receive a red card and be disqualified.

(B) The offences/ violations listed below lead to a time penalty of 30 seconds:

i. Discarding a loaded magazine to the floor on leaving the firing point;

ii. Carrying a loaded magazine on the running track;

iii. Leaving the Penalty Box too early.

(C) The offences/ violations listed below lead to a time penalty of 120 seconds:

i. The athlete leaves the firing point without having securely placed their rifle in the rifle rack causing it by its own weight to fall off from the rifle rack.

11.9 ATHLETES CATEGORIES

11.9.1 Individual ISSF Competition

Each organizer may designate ISSF competition categories for individual competition formats from the following list of categories:

Categories	Age using rule 3.7.4.12 Gen. Regs.
Junior Men	17 – 21
Junior Women	17 – 21
Men	21 >
Women	21 >

Each ISSF Member Federation is eligible to enter six (6) individual starters per competition category.

11.9.1.1 In accordance with General Regulations rule 3.7.4.11/7.4.11 there is no age limit for participation in ISSF Championships.

11.9.1.2 Athletes will remain as Juniors until the 31st December of the year in which they become 21 years of age. Any athlete born between the 1st January and the 31st December, will cease to be a Junior on the 31st December of that year. Juniors may participate in all ISSF Grand Prix and Championships as members of their national team. (Rule 3.7.4.12)

CamScanner

11.9.1.3 The final ranking at the ISSF Grand Prix and Championships can be established showing Juniors.

11.9.1.4 Any athlete can be part of the final ranking in one age category only.

11.9.2 **Mixed Team Competition**

11.9.2.1 Three (3) athletes from each nation first female or male, second female or male, third female or male but each team may only have a maximum of two same gender athletes at any time,.i.e. two male and one female athlete or two female and one male athlete.There is no designated category for the mixed team competition. In the mixed team competition, team members follow each other (with each team member starting in their designated order).

11.9.2.2 For mixed team events all 3 athletes must perform steps 1 to 5 (rule no. 11.8.2.1) one after each other in the following sequence:

- start athlete 1 running, shooting, running, shooting, running
- changeover athlete 2 running, shooting, running, shooting, running
- changeover athlete 3 running, shooting, running, shooting, running
- finish

Each ISSF Member Federation is eligible to enter two (2) Mixed Teams.

11.9.2.3 General Technical Rules 6.18.1.3 – 6.18.1.4 apply.

11.9.3 **Mixed Pairs Competition**

11.9.3.1 Organizers may offer mixed pairs competitions for two person teams first women or men and then second women or men, but each mixed pair may only consist of one male and one female athlete. There is no designated category for the mixed pairs competition. The names and order of the participating athletes in a mixed pair must be confirmed by the member federation to the event organizing committee at the time of registration and can only be changed with the event organizing committee agreement and by payment to the organizing committee of their published administration fee not less than 24hours before the start time of the relevant mixed pairs event. Only athletes from the same member federation can constitute a mixed pair.

11.9.3.2 For mixed pairs events the sequence shall be performed as follow:

o start athlete 1 →	start with	running – shooting
	change athlete 2	running – shooting
	change athlete 1	running – shooting
	change athlete 2	running – shooting – running
	finish	

Each ISSF Member Federation is eligible to enter a maximum of three (3) Mixed Pairs.

CamScanner

11.10 CHAMPIONSHIP ADMINISTRATION

11.10.1 Championship Programme and Schedule

11.10.1.1 General Technical Rules 6.6 – 6.6.6 apply.

11.10.2 Competition Organization

11.10.2.1 Competition Staff

11.10.2.2 The following staff persons are required to conduct a Target Sprint competition:

a. **Competition Manager** (CM).

b. **Chief RTS (CRTSO) and RTS Officers (RTSO)**.

c. **Chief Range Officer (CRO)**

d. **Range Officer (RO)**, plus one additional Range Officer for every five firing points on the air rifle range.

e. **Race Chief (RC)** to start competition heats, plus one **Range Assistant (RA)** for every firing point to monitor each designated athlete on the firing line for the number of shots taken per shooting series, the replacement of the rifle on the rifle rack and completion of each stage of the running stage plus RA's on the racecourse to monitor running course completion and running course violations.

f. **Competition Jury**.

If necessary for the venue additional staff can be appointed.

11.10.3 Competition Heats

11.10.3.1 Participating athletes must be divided into heats or groups that are scheduled to begin each race in mass starts. Each relay should include only athletes in one specific category (this does not apply to mixed team and mixed pairs events as they are not in categories). The number of firing points on the range determines the maximum number of athletes that can compete in one heat or group. Each athlete in a relay must be assigned to a specific firing point on the air rifle range. Firing point assignments should be made through random draws.

11.10.4 Competition Schedule

11.10.4.1 The competition schedule should follow this sequence:

a. **Technical Meeting:** Describe race procedures and shooting procedures and give safety instructions.

b. **Equipment Control:**

c. **Unofficial Training, or Official Training or PET.**

d. **Qualification Heats.**

e. **Final Heat for each individual athlete category and/or Finals for mixed team and/or mixed pairs. (The Finals should not start less than ninety (90) minutes from the completion of any qualification heat that any participating Finalist athlete has participated in.)**

f. **Award Ceremony and Closing.**

11.10.4.2 Qualification Heats

CamScanner

11.10.4.3 Qualifying races are required to be held in all competitions irrespective of the number of entrants in any class. If there are less athletes in a category than there are firing points, no qualification heat's will be held, instead 2 final races will be held in which the two run times will be added together, and the athlete with the best overall time will be the winner. If there are more athletes in a category than there are firing points, the competition for that category may be divided into two (2) or more qualification relays according to the number of firing points available. After the qualification heats for that category or class are finished, the best ten (10) athletes or mixed teams or mixed pairs according to their qualification time go into the Finals.

11.10.4.4 **Final Heats / Final Ranking / Production and Music**

11.10.4.5 Finalists will start at the same time. The number of athletes mixed teams and/or mixed pairs admitted to a final depends on the number of available firing points (maximum eight (8) finalists). The final ranking is according to the order of finish. Final rankings can also be determined according to the total time each athlete or mixed team or mixed pair used to complete all the running stages and shooting stages.

11.10.4.6 During the Qualification and Finals stages music is allowed. The Technical Delegate must approve the music programme. Enthusiastic audience support is encouraged and recommended.

11.10.5 **Late Arrival By Athlete**

11.10.5.1 If an athlete arrives late for a competition start time they may not participate If an athlete arrives after the Preparation and Sighting Time they may not participate.

11.10.6 **Special Competition Regulations**

11.10.6.1 General Technical Rule 6.11.8 applies.

11.11 RULES OF CONDUCT FOR ATHLETES AND OFFICIALS

11.11.1 General Technical Rules 6.12 – 6.12.6.4 apply.

11.12 MALFUNCTIONS

11.12.1 General Technical Rules 6.13 – 6.13.3 apply.

11.13 SCORING AND RESULTS PROCEDURES

11.13.1 General Technical Rules 6.14 – 6.14.8 apply.

11.14 WORLD RECORDS

11.14.1 General Technical Rules 6.14.9 – 6.14.9.4 apply.

11.15 TIE-BREAKING

11.15.1 All tied times will be broken by applying the following Rules:

a) The fastest time measured to one hundredth of a second.

b) If any ties remain, the athlete must have the same ranking and must be listed in Latin alphabetical order using the athlete's family name.

CamScanner

11.16 PROTESTS AND APPEALS

11.16.1 General Technical Rules 6.16 – 6.16.5.1 apply and General Technical Rules 6.16.6 – 6.16.7 apply.

11.17 ENTRY FEE

Entry Fee Individual Competition (set before the ISSF-WCH-Target Sprint 2017)	Euro	85.00
Entry Fee Team Competition (per Team)	Euro	85.00
Entry Fee Mixed Team Competition	Euro	85.00
Late Entry Fee for all Categories (between 30 and 3 days before the Official Arrival Day providing that entry can be accepted by the OC) per start Euro 220.00	Euro	220.00

11.17.1 For an ISSF-supervised Target Sprint Competition the Entry Fee stated in the Official Statutes, Rules and Regulations applies.

11.18 IRREGULAR OR DISPUTED MATTERS

11.18.1 Irregular or disputed matters will be decided by the Jury according to these rules.

11.19 FORMS

11.19.1 General Technical Rule 6.21 applies.

11.20 THE ISSF DRESS CODE

11.20.1 General Technical Rules 6.22 - 6.22.6.3 apply except that shorts may be more than fifteen (15)cm above the center of the kneecap and sleeveless T-shirts are permitted.

CamScanner

11.21 INDEX

Air Rifle Dimensions Chart	11.4.3
Ammunition	11.4.3.7
Barrels	11.4.1.5
Championship Program and Schedule	11.10.1
Competition Heats	11.10.3
Competition Rules	11.8.2
Competition Schedule	11.10.4
Competition Sequence	11.8.2.3
Competition Staff	11.10.2
Dry Firing	11.2.4
Electronic Triggers	11.4.1.8
Equipment and Accessories	11.5.2
Equipment Control	11.5.3.1
Event Stages	11.8.2.1
Eye Protection	11.2.6
Final Heats	11.10.4.4
Final Ranking	11.10.4.5
General and Administrative Facilities	11.3.2
General Standards for clothing	11.5.1
General Target Requirements	11.3.4
Hearing Protection	11.2.5
Height of Competition Targets	11.3.4.6
Individual ISSF Competition	11.9.1
Indoor Range Light Requirements (Lux)	11.3.5
Late Arrival by Athlete	11.10.4.5
Loading Stand	11.3.11
Malfunctions	11.12.1
Mixed Pairs Competition	11.9.3
Mixed Pairs Events Sequence	11.9.3.2
Mixed Team Competition	11.9.2
Mixed Team Events Sequence	11.9.2.2
Movement or Oscillation Reduction Systems	11.4.1.3
Offence/Violation Penalties (disqualification, penalty 30 / 120 sec.)	11.8.2.5
Palm Rests	11.4.3.5
Pellet Holder	11.4.1.7
Personnel are forward of the firing line	11.2.2.7

CamScanner

Pistol Grips	11.4.1.4 / 11.4.3.6
Post-Competition Testing	11.5.3
Production and Music	11.10.4.6
Qualification Heats	11.10.4.2
Range Commands	11.2.3
Ranges and other Facilities	11.3.1
Rifle Racks	11.3.4.7
Rifle Handling (Safety Regulation)	11.2.2
Rifle remains in the Rifle Rac	11.8.2.3
Rifle Specifications	11.4.2
Rifle Standards for all Target Sprint Rifles	11.4.1
Rifles unloaded and in save direction	11.2.2.3
Rules for a fair competition	11.8.2.4
COMPETITION SEQUENCE	11.8.2.3
Safety Flags / muzzle covers	11.2.2.2
Shooting Box or Bag	11.5.2.3
Shooting Gloves	11.5.1.3
Shooting Positions	11.8.1
Shooting Range for Target Sprint Competitions (Air Rifle)	11.3.3.10
Shooting Range Firing Line and Firing Points	11.3.3.11
Shooting Target Hits	11.8.2.2
Sights	11.4.1.6 / 11.5.2.2
Start and Finish Zones	11.3.3.3
Target and Hit Zone	11.3.4.4
Target Sprint General	11.1.2
Targets	11.3.4.3
The Running Course	11.3.3.5
The Running Distance.	11.3.3.7
Venue Design	11.3.3
Visor or Cap	11.5.2.4
Weights	11.4.3.4

CamScanner

CamScanner

The targets of the future

LS10 LASERSCORE®

for airguns
and small bore rifles

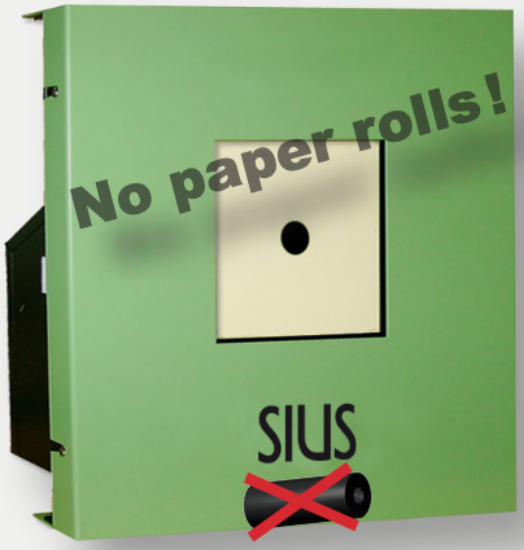

10m / 50m

HS25/50 HYBRIDSCORE®

for pistols
and small bore rifles

25m / 50m

SIUS

ISSF

Official ISSF Results Provider
Worldwide the only system
with ISSF-approval
for all disciplines

SIUS AG
Im Langhag 1
8307 Effretikon
Switzerland
Phone +41 52 354 60 60
Fax +41 52 354 60 66
www.sius.com
admin@sius.com

CamScanner